CONDOMINIUM OFFERING PLAN

THE 37-14 34TH STREET CONDOMINIUM

Property Located at:
37-14 34th Street
Long Island City, NY 11101
Queens County

THE OFFERING PRICE OF:

THE SEVENTY-SEVEN (77) RESIDENTIAL UNITS IS	$68,045,000.00
THE ONE (1) COMMERCIAL UNIT IS	$6,000,000.00
THE FORTY-THREE (43) PARKING UNITS IS	$3,440,000.00
THE FORTY-TWO (42) STORAGE UNITS IS	$866,000.00
THE SIX (6) CABANA UNITS IS	$740,000.00
FOR A TOTAL INITIAL OFFERING PRICE OF	$79,091,000.00

The Condominium will consist of Seventy-Seven (77) Residential Units, One (1) Commercial Unit, Forty-Three (43) Parking Units, Forty-Two (42) Storage Units, and Six (6) Cabana Units which are being offered for sale pursuant to this offering.

SPONSOR
3714 LIC DEVELOPMENT LLC

4918 3RD AVENUE
BROOKLYN, NY 11220

SELLING AGENT
HALSTEAD PROPERTY
DEVELOPMENT MARKETING
445 PARK AVENUE, 10TH FLOOR
NEW YORK, NY 10022

The Date of Acceptance for Filing is _____. This Offering Plan may not be used after _____, unless extended by amendment.

THIS OFFERING PLAN IS THE SPONSOR'S ENTIRE OFFER TO SELL THESE CONDOMINIUM UNITS. NEW YORK LAW REQUIRES THE SPONSOR TO DISCLOSE ALL MATERIAL INFORMATION IN THIS OFFERING PLAN AND TO FILE THIS OFFERING PLAN WITH THE NEW YORK STATE DEPARTMENT OF LAW PRIOR TO SELLING OR OFFERING TO SELL ANY CONDOMINIUM UNIT. FILING WITH THE DEPARTMENT OF LAW DOES NOT MEAN THAT THE DEPARTMENT OR ANY OTHER GOVERNMENT AGENCY APPROVED THIS OFFERING.

BECAUSE SPONSOR IS RETAINING THE UNCONDITIONAL RIGHT TO RENT RATHER THAN SELL UNITS AFTER THE OFFERING PLAN HAS BEEN CONSUMMATED, THIS OFFERING PLAN MAY NOT RESULT IN THE CREATION OF A CONDOMINIUM IN WHICH A MAJORITY OF THE UNITS ARE OWNED BY OWNER-OCCUPANTS OR INVESTORS UNRELATED TO THE SPONSOR.

PURCHASERS FOR THEIR OWN OCCUPANCY MAY NEVER GAIN CONTROL OF THE BOARD OF MANAGERS UNDER THE TERMS OF THIS OFFERING PLAN (SEE THE SPECIAL RISKS SECTION OF THIS OFFERING PLAN)

THIS OFFERING PLAN CONTAINS SPECIAL RISKS TO PURCHASERS. SEE PAGE i.

TABLE OF CONTENTS

PART I

SPECIAL RISKS I

INTRODUCTION 1

DEFINITIONS 6

DESCRIPTION OF PROPERTY AND IMPROVEMENTS 12

LOCATION AND AREA INFORMATION 17

OFFERING PRICES AND RELATED INFORMATION, SCHEDULE A 20

BUDGET FOR FIRST YEAR OF CONDOMINIUM OPERATION, SCHEDULE B 31

BUDGET OF INDIVIDUAL ENERGY COSTS, SCHEDULE B-1 39

COMPLIANCE WITH REAL PROPERTY LAW §339(I) 40

COMMERCIAL UNIT 42

PARKING UNITS 44

CHANGES IN PRICES AND UNITS 45

INTERIM LEASES 48

PROCEDURE TO PURCHASE 50

ASSIGNMENT OF PURCHASE AGREEMENTS 62

EFFECTIVE DATE 63

TERMS OF SALE 65

UNIT CLOSING COSTS AND ADJUSTMENTS 72

RIGHTS AND OBLIGATIONS OF THE SPONSOR 78

CONTROL BY THE SPONSOR 93

BOARD OF MANAGERS 95

RIGHTS AND OBLIGATIONS OF THE UNIT OWNERS AND THE BOARD OF MANAGERS 99

REAL ESTATE TAXES 116

REAL ESTATE TAX OPINION OF ELIGIBILITY 123

INCOME TAX DEDUCTIONS TO UNIT OWNERS AND TAX STATUS OF THE CONDOMINIUM 133

COUNSEL'S TAX OPINION 135

WORKING CAPITAL FUND 139
RESERVE FUND 139
MANAGEMENT AGREEMENT, CONTRACTS AND LICENSES 140
IDENTITY OF PARTIES 141
REPORTS TO UNIT OWNERS 143
DOCUMENTS ON FILE 143
GENERAL 144
RESERVATION OF AIR AND DEVELOPMENT RIGHTS 145
SPONSOR'S STATEMENT OF BUILDING CONDITION 145

PART II

RESIDENTIAL UNIT PURCHASE AGREEMENT 147
POWER OF ATTORNEY 174
FORM OF UNIT DEED 176
FORM OF INTERIM LEASE 181
TAX ESCROW AGREEMENT 184
DESCRIPTION OF PROPERTY AND SPECIFICATIONS 187
FLOOR PLANS 218
DECLARATION 315
BY-LAWS 351

CERTIFICATIONS

SPONSOR AND PRINCIPALS 387
SPONSOR'S ARCHITECT 390
SPONSOR'S EXPERT CONCERNING ADEQUACY OF BUDGET 393
CERTIFICATION OF ADEQUACY OF COMMERCIAL BUDGET 395

PART I
SPECIAL RISKS

THE PURCHASE OF A CONDOMINIUM UNIT HAS MANY SIGNIFICANT LEGAL AND FINANCIAL CONSEQUENCES. THE ATTORNEY GENERAL STRONGLY URGES YOU TO READ THESE OFFERING MATERIALS CAREFULLY AND TO CONSULT WITH AN ATTORNEY BEFORE SIGNING A PURCHASE AGREEMENT. THE FOLLOWING IS A SUMMARY OF CERTAIN SPECIAL RISK CONSIDERATIONS IN CONNECTION WITH THE OFFERING PLAN BUT IS NOT INTENDED TO SUMMARIZE ALL MAJOR FEATURES OF THE OFFERING PLAN. PROSPECTIVE PURCHASERS ARE URGED TO READ THE FOLLOWING SPECIAL RISK FACTORS IN CONJUNCTION WITH THE OFFERING PLAN FOR A DISCUSSION OF THESE AND OTHER IMPORTANT ASPECTS OF THIS CONDOMINIUM OFFERING.

1. Sponsor reserves the right to control the Board of Managers for a period of time until the earlier to occur of (a) thirty (30) days after the date by which one hundred percent (100%) of the Units have been conveyed to Purchasers; or (b) five (5) years after the First Closing (the "Sponsor Control Period"). Sponsor reserves the right to relinquish control of the Board of Managers prior to the expiration of the Sponsor Control Period. A meeting will be held to elect new board members unrelated to the Sponsor within thirty 30 days of the expiration of the Sponsor Control Period. However, as long as Sponsor owns a Unit, Sponsor will be entitled to appoint one (1) member of the Board of Managers and shall be entitled to cast one vote for each .0001% of Common Interest attributable to their Unit(s). In the event that there is a Successor Sponsor and Sponsor still owns a Unit, only Sponsor may appoint one (1) member of the Board of Managers. See the section "Control by The Sponsor" set forth in Part I of the Offering Plan.

2. Sponsor is retaining the unconditional right to rent Units in the Building after consummation of the Offering Plan that are being offered herein. Except for Interim Leases, Sponsor will not rent Units prior to First Closing. Unless this Offering Plan is abandoned, Sponsor will endeavor in good faith to sell Units rather than rent after the Offering Plan has been consummated but makes no representation that it will execute Purchase Agreements to sell more than fifteen percent (15%) of the Units. Twelve (12) Residential Units satisfy the fifteen percent (15%) threshold. As Sponsor's right to rent Units is unconditional, this Offering Plan may not result in the creation of a condominium in which a majority of the Units are owned by owner-occupants or investors unrelated to Sponsor; Sponsor could effectively control the Board indefinitely. The By-Laws do not require that a majority of the Board of Managers be owner-occupants who are unrelated to Sponsor after Sponsor relinquishes control of the Board of Managers, Purchasers for their own occupancy may never gain control of the Board. Owner-occupants and non-resident owners, such as Sponsor may have inherent conflicts on management of the Condominium. See the section "Control by The Sponsor" set forth in Part I of the Offering Plan.

3. Sponsor has obtained financing from Whitehorse Onshore Credit Opportunities I, LLC, H.I.G. Whitehorse Trinity Credit, LLC, BOF Holdings, IV, LLC, and H.I.G. Global Credit Holdings, LLC, located at 600 Fifth Avenue, 23rd Floor, New York, NY 10020. The liens held by the Lender shall be subordinate to the Declaration. Each Unit being conveyed at a Closing and such Unit's appurtenant Common Interest will be released from the Lender's mortgage upon

tender of the relevant payment as agreed to between Sponsor and Lender. Lender requires a minimum of fifteen (15) Residential Units be sold prior to declaring the Offering Plan effective. See the section "Terms of Sale" set forth in Part I of the Offering Plan.

4. Limited Common Elements are Common Elements existing for the sole use and enjoyment of certain Unit Owners to the exclusion of all other Unit Owners. Limited Common Elements include but are not limited to any facilities (pipes, shut-off valves, wires, lines, conduits) that exclusively serve a Unit that are located behind its boundary walls or within its boundary walls but not readily accessible without damage to such boundary walls, balconies, terraces, or yards that are allocated for the exclusive use of an appurtenant Unit, as set forth in the Floor Plans.

   Each Unit Owner of a Unit to which a Limited Common Element is appurtenant shall be responsible for the cost and performance of all painting, decorating and non-structural ordinary maintenance, repairs, cleaning and replacements to such Limited Common Element, including pipes, wires, and conduits exclusively servicing the Unit. However, any structural or non-ordinary repairs or replacements to a Limited Common Element shall be made by the Board of Managers, and the cost and expense thereof shall be charged to all Unit Owners as a Common Expense unless the need for such repair or replacement was caused by the wrongful or negligent act or omission of a Unit Owner or their tenants, guests, or invitees whereby the cost shall be charged to such Unit Owner. The Board of Managers shall have the right of access to, in, and through these areas for the purpose of doing building maintenance inspections. No structures of any kind may be erected on Limited Common Elements without the express written permission of the Board of Managers, except for temporary structures. Notwithstanding anything herein to the contrary, a Unit Owner who wishes to paint, decorate or make any other changes to a Limited Common Element appurtenant to their Unit, and which change deviates from the Limited Common Element as it was originally delivered by Sponsor, must first obtain express written permission from the Board of Managers; for as long as Sponsor owns at least one Unit, a Unit Owner must also obtain express written permission from the Sponsor.

   Limited Common Elements and any cellar spaces are considered uninhabitable space and may not be legally used as a bedroom or living room and to do so may result in a building code violation being issued for the Building. Any cellar space has less light and air than ordinary living space and is more susceptible to dampness. Refer to Schedule A for the amount of Limited Common Elements available to each Unit Owner.

   See the sections "Description of Property and Improvements" and "Schedule A" set forth in Part I of the Offering Plan and see the "Description of Property and Building Condition," "Floor Plans," and "Declaration" set forth in Part II of the Offering Plan.

5. New York City's Façade Inspection Safety Program ("FISP"), also known as Local Law 11/98 applies to this Building. FISP requires that owners of buildings, with greater than six stories above grade, have their exterior walls and appurtenances inspected periodically. FISP reports are due once in five-year cycles. Once a new building is issued the first temporary Certificate of Occupancy, the five-year "grace period" begins. After this five-year period is over, the building must file during the next applicable cycle. Unless Sponsor still controls the Board at such time, the obligation to comply with FISP shall be solely on the Unit Owner-controlled Board. Sponsor shall have no responsibility or obligation to organize such inspections after the

termination of the Sponsor Control Period. The cost of retaining a Qualified Exterior Wall Inspector to perform the inspection and file the report, as well as making any necessary repairs, will be a Common Expense in the future. The cost of retaining a Qualified Exterior Wall Inspector is currently approximately $5,000; Sponsor makes no warranty or representation that the law will not change or what the actual cost of compliance will be. In the same fashion, the Condominium Board will be responsible for maintaining the sidewalk(s) in accordance with the requirements of the Department of Transportation. See the section "Description of Property and Improvements" set forth in Part I of the Offering Plan. See the section "Description of Property and Improvements" set forth in Part I of the Offering Plan.

6. Purchasers should note the Parking Units may be subject to the requirements of MDL §60 and ZR25-412, as applicable. As such, the Parking Units can be rented by Sponsor or by Purchasers of a Parking Unit to persons other than a Residential Unit Owner. However, in the event a Parking Unit is being rented by a non-Residential Unit Owner and a Residential Unit Owner makes a written request for the Parking Unit, the Parking Unit must be offered to the Residential Unit Owner making such request. Purchasers are advised to refer to MDL §60 and ZR25-412 for further information. See the section "Description of Property and Improvements" set forth in Part I of the Offering Plan.

7. Environmental Remediation

   The Site is approximately 19,500 square feet in area. The site previously contained a large one-story commercial building consisting of a warehouse and factory that was constructed in 1947. Prior to 1947, the site was occupied by residential buildings. The area of concern includes soil vapor beneath the western portion of the site, which contained a parking garage and storage space. During testing, petroleum related VOCs were detected at elevated concentrations. Site-Specific (Track 1) Soil Cleanup Objectives (SCO) were established. Following soil remediation, the Site met the Track 1 Site-Specific SCOs which is protective of public health and the environment for its planned use. Engineering controls such as monitoring are not required for a Track 1 cleanup. Track 1 does not contain use restrictions and do not require long term institutional or engineering controls; a Site Management Plan is not required.

   The site will be protected by a vapor barrier installed underneath the slab in the cellar and first floor of the property as well as along the outside surface of foundation walls from bottom to grade. The vapor barrier will be installed as a precautionary measure. The vapor barrier does not require any special operation or maintenance activities. If the vapor barrier is breached during future construction activities, vapor barrier material will be fastened to the existing vapor barrier material and fastened to the walls under the floor slab of the building in accordance with manufacturer specification.

   For more details and to view the publicly available documents, Purchasers and Unit Owners can visit the following website of OER:

   https://a002-epic.nyc.gov/app/search/advanced
   Project ID: 15CVCP141Q
   Project Number: 15EH-A153Q

   See the section "Description of Property and Improvements" set forth in Part I of the Offering

Plan.

8. No representation is made that future construction in the neighborhood surrounding the Property will not result in obstruction of the views from any window, portion of the façade or curtain wall, and/or terrace in the Building. The Sponsor has no other projects within the immediate vicinity of the Building and has no development projects approved by the NYC Department of Buildings that will be adjacent to or directly across the street from the Building. If any material change in the vicinity occurs that affects the use or enjoyment of the property while sales are ongoing, an amendment will be filed within 30 days after the information becomes known to the Sponsor disclosing the material change. See the section "Location and Area Information" set forth in Part I of the Offering Plan.

9. Floor Plans depicting layouts of Units in this Schedule A appear in Part II of the Offering Plan. Purchasers should note that the square footage of each Unit, as reflected in Schedule A, the Floor Plans set forth in Part II of the Offering Plan, and in Exhibit B to the Declaration set forth in Part II of this Offering Plan are approximate and are within reasonable tolerances. Each Residential Unit is measured horizontally from the exterior side of exterior walls (perimeter columns and mechanical pipes, ducts and shafts are not deducted) to the midpoint of the interior walls and partitions separating one Unit from another Unit, or separating a Unit from public corridors, and other mechanical equipment spaces or any Common Elements or Limited Common Elements. Notwithstanding the foregoing, any Common Elements located within this described form of measurement shall not be considered part of such Unit. Each Unit will be measured vertically from the top of the floor slab below (located under the finished flooring and sub-floor materials) to the underside of the floor slab above. Dimensions listed on Schedule A are based on this method of measurement; since the area calculations are not based upon measurements from interior surfaces of interior walls, the usable floor area of each Unit is significantly less than the area listed in Schedule A. Floor area may include columns, mechanical pipes shafts, shaftways chases, chaseways and conduits which may be incorporated behind protruding walls or may be separately enclosed as freestanding columns thereby reducing the available floor area. Each Unit also includes the interior doors and walls and all plumbing, gas and electrical fixtures, lines, conduits and equipment such as refrigerators, dishwashers, panel boxes, ranges and other appliances, as may be affixed, attached or appurtenant to said Unit, not including the Building heating equipment and system, plumbing, gas and electrical fixtures and equipment as used in the preceding sentence include exposed and unexposed (to the extent solely serving or benefiting the Unit) gas and water pipes attached to the fixtures, appliances and equipment fixtures, appliances and equipment, and appliances and any special equipment, fixtures or facilities affixed, attached, or appurtenant to the Unit.

   See the section "Schedule A" set forth in Part I of the Offering Plan.

10. Non-Residential Unit Owners have certain special rights under the Declaration. Except to the extent inconsistent with the By-Laws or prohibited by law, and unless there shall be a material effect on the Residential Unit Owners, a Non-Residential Unit Owner shall have the right, without the vote or consent of the Board to subdivide and sublet any or all of the Unit. A Non-Residential Unit may be divided into any number of smaller Condominium Units, or combined

into any number of larger Units, provided that the total allocation of common interest of the newly created Units may not be altered by such sub-division or combination; and further provided that all such subdivisions must be in conformity with applicable zoning rules and the Certificate of Occupancy for the premises. Non-Residential Unit Owners shall not be required to seek the approval of the Board of Managers of the Condominium unless such change in the use or configuration of the Unit would have a material effect on the Residential Unit Owners. Except as set forth in the preceding sentence, neither the Board of Managers nor the Residential Unit Owners will have any right to restrict or limit any lawful use of a Non-Residential Unit. No representation or warranty is made as to who the owner or tenants of the Unit may be at any time, or as to the uses to which such Unit may be put at any time. See the By-Laws for restrictions of use of the Non-Residential Units. The Sponsor-Controlled Board shall not be permitted to amend the By-Laws to permit any of the currently impermissible uses of the Non-Residential Units.

In addition, Non-Residential Unit Owners will have an easement through and along all of the General Common Elements and Residential Common Elements to install, maintain, operate, repair and replace any and all cables, conduits, wires, apparatus and equipment as may be required in connection with telecommunications and the general operation of the Non-Residential Unit and similar equipment. Any utility, cable TV or similar company that is entitled by law to install equipment in such portion of the Common Elements shall have an easement through the Non-Residential Unit in such manner as shall be reasonably determined by the Board of Managers. Each of the foregoing easements shall be exercised in such manner as to not unreasonably disrupt the use by other Unit Owners of their respective Units. See the section "Commercial Unit" set forth in Part I of the Offering Plan.

11. In the event a Purchaser takes possession of a Unit prior to Closing pursuant to an Interim Lease, upon an uncured default by Purchaser under the terms of the Interim Lease which is not cured within 30 days after notice thereof, or immediately after Purchaser exercises any right of rescission with respect to the Purchase Agreement, Purchaser's right to occupy the apartment will terminate, and Purchaser must vacate the Apartment. Purchaser shall pay to Sponsor $500.00 per day for each day Purchaser remains in possession following the periods set forth above; this amount will be due in addition to any liquidated damages due pursuant to the Purchase Agreement and will not be released from escrowed funds. Nothing contained herein shall be construed so as to limit Sponsor's ability to have Purchaser evicted from the premises and to pursue any other legal remedy available to Sponsor, nor shall anything herein be construed as a waiver by the Sponsor of their right to retain, as liquidated damages, the Deposit deposited upon execution of the Purchase Agreement. Sponsor may utilize a default under the Interim Lease to declare a default under the Purchase Agreement, however, Sponsor must first either obtain an order of eviction or other judgment or order from a court or agency of competent jurisdiction against the Purchaser, unless the Purchaser has vacated the unit. Nevertheless, Sponsor may utilize a default under the Purchase Agreement to declare a default under the Interim Lease without a judgment or order from a court or agency of competent jurisdiction against the Purchaser and then commence eviction proceedings. See the section "Interim Leases" set forth in Part I of the Offering Plan.

12. Purchaser acknowledges that Purchaser has not relied upon any sales plans, selling brochures, advertisements, representations, warranties, statements or estimates of any nature whatsoever, whether written or oral, made by Sponsor, Selling Agent or otherwise, including, but not

limited to, any relating to the description or physical condition of the Property, the Building or the Unit, or the size or the dimensions of the Unit or the rooms therein contained or any other physical characteristics thereof, the services to be provided to Unit Owners, the estimated Common Charges allocable to the Unit, the estimated real estate taxes of the Unit, the ability to rent the Unit and/or the rental income therefore, the right to any income tax deduction for any real estate taxes or mortgage interest paid by Purchaser, or any other data, except as herein or in the Offering Plan specifically represented; as such, Purchasers are urged to ensure material representations are incorporated into the negotiated Purchase Agreement. Purchaser acknowledges it has relied solely on their own judgment and investigation in deciding to enter into the Purchase Agreement and purchase the Unit. No person has been authorized to make any representations on behalf of Sponsor. No oral representations or statements shall be considered a part of the Purchase Agreement. Purchaser shall not be relieved of any of Purchaser's obligations under the Purchase Agreement, and Purchaser agrees to purchase the Unit, without offset or any claim against, or liability of, Sponsor, by reason of any immaterial inaccuracy or error, including but not limited to immaterial inaccuracy or error in the layout or dimension of the Unit or any part thereof, or of the Common Elements, except as provided under applicable law or as set forth in this Offering Plan. A decrease in a unit's area of 5% or less will not affect a Purchaser's obligations unless such decrease is determined to be a material change. There is a rebuttable presumption that an area that is diminished by 5% or less is not material. Notwithstanding the foregoing, representations that are inconsistent with this Offering Plan or the Purchase Agreement will not affect Sponsor's liability under the Martin Act.The provisions of this paragraph shall survive the closing of title or the termination of the Purchase Agreement. See the section "Procedure to Purchase" set forth in Part I of the Offering Plan.

13. Except as prohibited by law, Purchasers expressly waive trial by jury in any litigation arising out of, connected with, or relating to the Purchase Agreement or the relationship created in the Offering Plan. With respect to any matter for which a jury trial cannot be waived, the parties agree not to assert any such claim as a counterclaim in, nor move to consolidate such claim with, any action or proceeding in which a jury trial is waived. Any lawsuit arising out of the Purchase Agreement shall be governed by the laws of the State of New York and shall be brought in the county in which the Building is located. The provisions of this paragraph shall survive closing of title or the termination of the Purchase Agreement. See the section "Procedure to Purchase" set forth in Part I of the Offering Plan.

14. If Sponsor prevails, Purchaser shall be obligated to reimburse Sponsor for any reasonable legal fees and disbursements incurred by Sponsor, as determined by a court of law, in successfully defending Sponsor's rights under the Purchase Agreement or, in the event Purchaser defaults under the Purchase Agreement, in canceling the Purchase Agreement or otherwise enforcing Purchaser's obligations thereunder. If Purchaser prevails, Purchaser will not be reimbursed for any legal fees or disbursements incurred by Purchaser in successfully defending Purchaser's rights under the Purchase Agreement or otherwise enforcing Sponsor's obligations thereunder. These provisions shall survive closing of title or the termination of the Purchase Agreement. See the section "Procedure to Purchase" set forth in Part I of the Offering Plan.

15. Purchasers are advised that all Deposits will be held in the escrow account maintained by Marans, Weisz & Newman LLC, as escrow agent at Capital One Bank, N.A., 299 Park Avenue, New York, NY 10171 (the "Escrow Account"). The Escrow Account is federally insured by

the FDIC at the maximum amount of $250,000 per deposit. Purchasers making Deposits in excess of $250,000 are advised that FDIC deposit insurance does not cover deposited monies in excess of this amount. Purchasers are also advised that if Purchasers have an account at the escrow bank, then the Purchaser's account balance factors into the $250,000 FDIC insurance limit. See the section "Procedure to Purchase" set forth in Part I of the Offering Plan.

16. Sponsor anticipates that the first closing of a Unit will occur by October 1, 2020. Purchasers will be offered a right of rescission if: (i) the actual date of closing of title to the first Residential Unit; or (ii) the projected date of closing of title to the first Residential Unit occurs later than October 1, 2021, twelve (12) months after the projected date for the first closing. If the Offering Plan is amended to provide for a later projected date for the first closing, purchasers will be entitled to an offer of rescission if the first closing occurs more than twelve (12) months beyond that amended, later date. Purchasers should note that even if the first closing occurs on or before October 1, 2020 (or such other date projected as the date of commencement of the operation at the time the purchase agreement was entered into) or within the twelve month period thereafter, the closing of subsequent units may be substantially delayed beyond such dates if a TCO has not been issued for such units or for the floor on which such units are located. In such case, provided that Sponsor is diligently pursing completion of construction and the issuance of a Certificate of Occupancy and is otherwise in compliance with its obligations under the Offering Plan, Purchaser will not be entitled to a right of rescission or to make claims against Sponsor for damages or losses as a result of such delays and will not be excused from paying the full purchase price for the Unit. PROSPECTIVE PURCHASERS SHOULD THEREFORE CAREFULLY CONSIDER THE POSSIBILITY OF SUCH DELAYS IN THEIR DETERMINATION AS TO WHETHER TO PURCHASE A UNIT. See the section "Procedure to Purchase" set forth in Part I of the Offering Plan.

17. The First Year of Operations is estimated to commence October 1, 2020. As in any construction project, given the vagaries of the construction process, it is difficult to predict with precision the date Sponsor will first be able to close title to the Residential Units. Accordingly, it is a special risk of this Offering Plan that the First Residential Closing may occur sooner or later than the projected First Year of Operations, and closing to certain Residential Units may occur substantially before or after closing for other Residential Units. See the section "Procedure to Purchase" set forth in Part I of the Offering Plan.

18. There are numerous time constraints imposed in the Purchase Agreement set forth in Part II of this Offering Plan. TIME IS OF THE ESSENCE with respect to Purchaser's obligations to pay the balance of the purchase price and to pay, perform or observe Purchaser's other obligations under the Purchase Agreement. Upon the occurrence of an Event of Default as defined in the Purchase Agreement, Purchaser shall have thirty (30) days from the giving of written notice of such default to cure the specified default. If the default is not cured within such thirty (30) days, TIME BEING OF THE ESSENCE, then Sponsor, in its sole discretion, may thereupon terminate the Purchase Agreement. If Sponsor so elects to terminate, the Purchase Agreement shall be deemed terminated, and Sponsor shall have the right to retain, as and for liquidated damages, the Deposit (and any interest earned of the Deposit, if any) plus the costs incurred by Sponsor for any special work, if any, in the Unit ordered by the Purchaser. Upon the termination of the Purchase Agreement, Purchaser and Sponsor will be released and discharged of all further liability and obligations under the Offering Plan and the Agreement, and the Unit may be sold to another as though the Purchase Agreement had never been made, and without

accounting to Purchaser for any of the proceeds for such sale.

NEITHER SPONSOR NOR PURCHASER SHALL CHALLENGE THE VALIDITY OF THE PROVISIONS OF THE PURCHASE AGREEMENT OR THE OFFERING PLAN WITH RESPECT TO LIQUIDATED DAMAGES OR ANY RIGHT OF SPONSOR SET FORTH HEREIN OR THEREIN TO RETAIN THE DEPOSIT IN THE EVENT OF A PURCHASER DEFAULT. SUCH PROVISIONS HAVE BEEN AGREED TO VOLUNTARILY, AFTER NEGOTIATION, WITHOUT DURESS OR COERCION BY ANY PARTY UPON ANY OTHER PARTY, AND WITH EACH PARTY HAVING BEEN (OR HAVING HAD FULL AND ADEQUATE OPPORTUNITY TO BE) REPRESENTED AND ADVISED BY COUNSEL, ACCOUNTANTS, BROKERS, APPRAISERS AND OTHER EXPERTS AND ADVISORS OF ITS OWN CHOOSING.

See the section "Procedure to Purchase" set forth in Part I of the Offering Plan and "Form of Purchase Agreement" set forth in Part II for a statement of all applicable time limitations.

19. The Purchase Agreement is contingent upon the Offering Plan being declared effective. If the Offering Plan is abandoned, Purchase Agreements will be terminated, and all monies held by Sponsor, including advances made for upgrades, extras, or custom work, shall be returned to Purchasers and neither party shall have any further rights or obligations arising thereunder or relating thereto. See the section "Procedure to Purchase" set forth in Part I of the Offering Plan.

20. The terms and provisions of the Purchase Agreement and Purchaser's obligations thereunder are not contingent upon Purchaser securing financing of the Purchase Price (or any portion thereof). Purchaser's failure to obtain such financing will not relieve Purchaser of Purchaser's obligations under the Purchase Agreement. A Purchaser who does not obtain financing may lose the Deposit if they are unable to otherwise raise the monies for the balance of the purchase price. A Purchaser who requires financing is advised to consult with a lending institution before execution of this Purchase Agreement. Sponsor makes no representation whatsoever as to the terms, cost, or availability of any mortgage or other financing. Purchaser further understands and agrees that if Purchaser chooses to finance Purchaser's purchase of the Unit through a lending institution and obtain a commitment therefrom, neither a subsequent change in the terms of such commitment, the expiration or other termination of such commitment, nor any change in Purchaser's financial status or condition shall release or relieve Purchaser of Purchaser's obligations pursuant to this Agreement.

    Purchasers should note that in the current real estate market, banks and other lenders are imposing various restrictions on purchase financing. Such restrictions include requiring that a certain percentage of apartments in a building or group of buildings be sold before a lender will consider making a loan. Thus, it may be possible for a purchaser to experience difficult obtaining a loan in a building or group of buildings where the sponsor or holder of unsold shares has not sold a substantial percentage of apartments in the building or group of buildings, which in some cases may be as high as 70%. Moreover, some lenders will not provide financing in a building or group of buildings where an investor other than the original sponsor has an ownership interest of 10% or more. It also may be difficult for a purchaser to resell an apartment if prospective buyers are unable to obtain a loan due to the same minimum sales and investor ownership restrictions.

See the section "Procedure to Purchase" set forth in Part I of the Offering Plan.

21. The risk of loss to the Unit by fire or other casualty, until the earlier of closing of title or the taking of possession of the Unit by Purchaser, is assumed by Sponsor; provided that Sponsor shall have no obligation or liability to repair or restore the Unit. The risk of loss is assumed by a Purchaser who has taken possession of the Unit prior to closing, e.g. via an Interim Lease, to the extent that such loss is not covered by the Condominium's or Sponsor's insurance.

    In the event of damage or destruction of the Unit, due to fire or other casualty, prior to the closing of title, and the election by Sponsor to repair or restore the Unit to its original condition immediately prior to the fire or other casualty, the Purchase Agreement shall continue in full force and effect, Purchaser shall not have the right to reject title or receive a credit against, or abatement in, the Purchase Price, and Sponsor shall be entitled to a reasonable period of time within which to complete the repair or restoration. Any proceeds received from insurance or in satisfaction of any claim or action in connection with such loss shall, subject to the rights of the Board of Managers and other Unit Owners if the Declaration has theretofore been recorded and any mortgagee of Sponsor, belong entirely to Sponsor and if such proceeds are paid to Purchaser, Purchaser shall promptly upon receipt thereof turn them over to Sponsor. As Sponsor has a reasonable period of time to restore a Unit after the occurrence of a casualty if it elects to do so, and the time period that would be considered reasonable will depend on the nature of the casualty, the financing commitment of a Purchaser who is dependent on financing to pay the balance of the purchase price may expire prior to the restoration of the Unit, and such Purchaser could lose their Deposit if the Purchaser is not able to extend the term of the commitment to accommodate the restoration period. See the section "Procedure to Purchase" set forth in Part I of the Offering Plan.

22. Purchaser may not assign the Purchase Agreement without first obtaining the prior written consent of Sponsor, which consent may be granted or withheld in Sponsor's sole and absolute discretion. Sponsor and its agents will not discriminate against any person on the basis of race, creed, color, national origin, sex, age, disability, marital status or other grounds prohibited by law. Purchaser will be required to pay to Sponsor's attorneys a fee in the amount of $1,000.00 for each assignment or change permitted by Sponsor. See the section "Procedure to Purchase" set forth in Part I of the Offering Plan.

23. Pursuant to the Geographic Targeting Order issued by the Director of the Financial Crimes Enforcement Network, title companies are now required to collect and report information regarding purchasers in transactions where: (1) the purchaser is a legal entity as defined in the Geographic Targeting Order; (2) the purchaser purchases residential real property located in the Boroughs of Brooklyn, Queens, Bronx, Manhattan and Staten Island; (3) the total purchase price is in excess of Three Hundred Thousand Dollars ($300,000.00); (4) such purchase is made without a bank loan or other similar form of external financing; and (5) the purchase is made, at least in part, using currency or a cashier's check, a certified check, a traveler's check, a personal check, a business check, or a money order in any form, a funds transfer, or virtual currency. This affects all residential real property closings meeting the above criteria and occurring on or after May 16, 2019 for so long as the Geographic Targeting Order remains in effect. The Geographic Targeting Order expires on November 11, 2019 and is expected to be renewed on similar terms upon expiration. A copy of the Order is available here:

https://www.fincen.gov/sites/default/files/shared/Real%20Estate%20GTO%20GENERIC_111518_FINAL.pdf

See the section "Procedure to Purchase" set forth in Part I of the Offering Plan.

24. The Purchase Agreement is contingent upon the Offering Plan being declared effective. If the Offering Plan is abandoned, Purchase Agreements will be terminated, and all monies held by Sponsor, including advances made for upgrades, extras, or custom work, shall be returned to Purchasers and neither party shall have any further rights or obligations arising thereunder or relating thereto.

    The Offering Plan may be abandoned by Sponsor, at its sole option, at any time before it is declared effective. If the Offering Plan is to be abandoned after filing and the Sponsor has accepted Purchase Agreements, the Sponsor shall promptly submit an amendment to the Department of Law together with form RS-3 as promulgated by the Department of Law. If payments under Purchase Agreements have been received, the amount of such funds shall be returned to the Purchasers by the Escrow Agent within five (5) business days after the amendment abandoning the Offering Plan has been accepted for filing. If there are no outstanding Purchase Agreements, the Sponsor need not submit an amendment but shall submit a form RS-3 to the Department of Law.

    See the section "Effective Date" set forth in Part I of the Offering Plan.

25. Each Purchaser will be required to pay certain fees to Sponsor's attorneys including, but not limited to, a fee of $2,500.00 and ACRIS preparation fee of $250.00 for the Purchaser's Unit which will cover the legal and other fees and expenses of processing the sale of the Unit. In the event the Closing does not take place on the Closing Date, through no fault of Sponsor and provided further that Sponsor is ready, willing and able to close on the Closing Date, (i) the apportionment of those items set forth in the Purchase Agreement shall be made as of the originally established Closing Date rather than as of the date the Closing actually occurs, (ii) Purchaser shall pay Sponsor, at Closing, interest on the unpaid balance of the purchase price for each day starting from (and including) the originally scheduled Closing Date to (and including) the day before the actual Closing Date, where interest shall be equal to the highest legal rate as of the Closing Date (the current rate is 16% per annum). The following additional charges may apply:

    i. $500.00 to Sponsor's attorney if the Closing is not held at Sponsor's attorneys' offices at the request of Purchaser or Purchaser's lender.
    ii. $500.00 to Sponsor for each adjournment of the Closing requested or caused by Purchaser or Purchaser's lender.
    iii. $500.00 to Sponsor's attorney if the Closing is held outside New York City at the request of Purchaser or Purchaser's lender.
    iv. $1,000.00 to Sponsor's attorney for the preparation of a letter of default.
    v. $350.00 to Sponsor's attorney if a Purchaser shall obtain mortgage financing through a lender to defray the additional costs associated therewith.
    vi. $1,000.00 to Sponsor's attorney for an assignment agreement, if requested by Purchaser and provided Sponsor has consented thereto.
    vii. $1,000.00 to Sponsor's attorney for preparation of Interim Lease Agreement.

Nothing herein shall be construed to mean that the Sponsor must grant an adjournment of title when requested to do so. If at a Purchaser's request Sponsor grants an adjournment or adjournments of their closing of title in excess of five (5) days in the aggregate, the Sponsor has the option of collecting an additional five percent (5%) of the purchase price of the Unit as an additional Deposit. See the section "Unit Closing Costs and Adjustments" set forth in Part I of the Offering Plan.

26. Sponsor is transferring its statutory obligation, to pay New York City Real Property Transfer Taxes and New York State Real Estate Transfer Taxes, to Purchaser. Purchasers will be required to pay all transfer taxes due at Closing and comply with the requirements of the New York State Department of Taxation and Finance. Purchaser shall pay the Real Estate Transfer Tax due to the State of New York (the so-called "deed stamps" and, if applicable, the so-called "mansion tax"), the Real Property Transfer Tax due to the City of New York and any other real property transfer tax due to the City or State of New York. Purchaser agrees to indemnify and hold Sponsor harmless from and against any and all liabilities and expenses (including, without limitation, reasonable legal fees and disbursements) incurred by Sponsor by reason of the non-payment by Purchaser of any of the taxes Purchaser is obligated to pay hereunder in connection with the purchase of the Unit. Purchaser's obligations to pay the taxes and to indemnify Sponsor as shall survive the closing of title.

    Purchasers shall be responsible for the payment at closing of all New York City Real Property Transfer Tax and New York State Real Estate Transfer Tax. Transfer taxes are computed using the purchase price for units purchased and fees paid by Purchaser for Sponsor's attorney (the "Consideration"). The New York City Real Property Transfer Tax (the "RPT") for the purchase of a single residential unit is currently one percent (1%) of the Consideration if such Consideration is $500,000.00 or less, and 1.425% if such Consideration is over $500,000.00. The New York State Real Estate Transfer Tax (the "NYS Tax") for the purchase of a single residential unit under $3,000,000 is currently $2.00 for every $500.00 or part thereof (.4%) of the Consideration. The New York State Real Estate Transfer Tax (the "NYS Tax") for the purchase of a single residential unit over $3,000,000 is currently $3.25 for every $500.00 or part thereof (.65%) of the Consideration. In order to compute the transfer taxes payable:

    (i) Add the rates for RPT and NYS Tax. The result will be "Total Tax Rate"
    (ii) Divide Consideration by 1 minus Total Tax Rate. The result will be "Total Consideration"
    (iii) To compute RPT due, multiply Total Consideration by the RPT rate
    (iv) To compute NYS Tax due, multiply Total Consideration by NYS Tax rate

    See the section "Unit Closing Costs and Adjustments" set forth in Part I of the Offering Plan.

27. Purchaser shall make a contribution to the Working Capital Fund and Reserve Fund of the Condominium, payable to the Board of Managers, each in the sum of one months' common charges then in effect for the Unit, as the same may be amended from time to time. Except for the initial contribution by Purchasers, the Reserve Fund is funded through Common Charges. See the section "Unit Closing Costs and Adjustments" set forth in Part I of the Offering Plan.

28. To the extent that the Purchaser is entitled to any credit against the mortgage recording tax by

reason of any prior mortgage against the Unit or the Property, the Purchaser shall pay to Sponsor at the Closing for such Unit the amount of any such credit, if applicable. If the Purchaser obtains a mortgage loan, the Purchaser will pay Sponsor an amount equal to the partial mortgage tax credit which may be available pursuant to §339-ee(2) of the New York State Condominium Act.

In the event the credit under §339-ee(2) is not available, an exemption is available if Purchaser's lender assumes or consents to the assignment of a mortgage lien encumbering such Purchaser's Unit. At the request of Sponsor, Purchaser shall fully cooperate with Sponsor in all respects in connection with the severance and assignment of a portion of the mortgage indebtedness encumbering the Property in an amount not to exceed such Purchaser's loan amount, and the assignment of the severed portion to Purchaser's lender and the consolidation of such severed portion of the mortgage indebtedness encumbering the Property with Purchaser's mortgage. To the extent that the Purchaser is entitled to an exemption from the mortgage recording tax by reason of any prior mortgage against the Unit or the Property, including but not limited to Sponsor's mortgage, the Purchaser shall pay to Sponsor at the Closing for such Unit the amount of any such exemption. The severance and assignment of a portion of the mortgage on the Property, as contemplated herein would not result in any additional risk or cost to the Purchaser; under no circumstance will this be the cause of Purchaser losing financing. Any severance/assignment transaction will be initiated only after financing has been procured by Purchaser. After Purchaser has obtained a commitment letter, Sponsor's counsel will notify Purchaser to contact their lender and request the lender to participate in the assignment; if the lender does not agree to assume or consent to the assignment of a mortgage, then the closing will proceed conventionally. If Purchaser's lender agrees to participate, Purchaser's lender will coordinate with Sponsor's counsel to prepare the necessary documents for closing; Purchaser shall not be liable for an adjournment due solely from the additional coordination required for the severance and assignment; Sponsor shall not cause Purchaser to lose financing.

For properties in New York City, the mortgage tax is currently 2.05% less $30.00 of any mortgage obtained by the Purchaser of less than $500,000.00 and 2.175% less $30.00 for mortgages of $500,000.00 or more. Of this amount the lender pays a portion of the mortgage tax equal to 0.25% of the mortgage amount. In no event will the amount payable by Purchaser to Sponsor exceed the amount of mortgage tax which would have been payable by the Purchaser if such mortgage tax credit or exemption had not been available to Purchaser.

See the section "Unit Closing Costs and Adjustments" set forth in Part I of the Offering Plan.

29. No bond or other security has been furnished to secure Sponsor's obligations under the Offering Plan, including without limitation those obligations specified in the section "Rights and Obligations of the Sponsor" set forth in Part I of the Offering Plan.

30. Sponsor is reserving the right to delay the collection of Common Charges. During any such period of delay, the Sponsor will timely pay all expenses of the Condominium, including, but not limited to, insurance premiums and any reserve fund payments required by lenders. Such expenses shall not include individual Unit Owner expenses such as real estate taxes, utility charges, etc. Upon commencement of collection of Common Charges, there will not be an assessment for any item in the approved budget for the Condominium. Regardless of the delay

in collection of Common Charges, Sponsor shall remain obligated to update the budget for the Condominium as required by Department of Law governing regulations. In the event Sponsor elects to delay the collection of Common Charges, Sponsor shall disclose such fact in the closing notice or statement to Purchasers. Thereafter, Sponsor shall also disclose such fact in the post-closing amendment to the Offering Plan as a benefit to subsequent purchasers. Such amendment shall also disclose the anticipated period of delay. Prior to commencing the collection of Common Charges, Sponsor will notify all unit owners by written notice of the expiration of the delay period. Notice shall be given to owners in writing at least thirty (30) days prior to the commencement of collection of Common Charges. Thereafter, Sponsor will disclose such fact in the next substantive amendment to the Offering Plan as a benefit to subsequent purchasers. See the section "Rights and Obligations of the Sponsor" set forth in Part I of the Offering Plan.

31. Prior to the closing of title to the first Unit, Sponsor shall have obtained a temporary or final Certificate of Occupancy for the entire Condominium. Sponsor anticipates on being able to obtain a final Certificate of Occupancy ("FCO") and all necessary permits for all elements of the Condominium within two (2) years of closing of title to the first Unit and, prior to the issuance of a FCO will cause any expiring temporary Certificate of Occupancy ("TCO") to be extended. Purchasers are advised that in New York City, newly constructed and newly renovated buildings are sometimes offered as condominium projects without a final Certificate of Occupancy covering the entire building but with only a TCO, and sometimes with several successive TCOs. Certificates of occupancy are generally governed by Section 301 of the New York State Multiple Dwelling Law and local building codes and rules. Both TCOs and FCOs are issued by the New York City Department of Buildings ("DOB"). A TCO is intended to indicate that the property conforms substantially to the DOB approved plans and specifications, and to the requirements of all applicable laws, rules, and regulations for the uses and occupancies specified in the TCO. No change of use or occupancy shall be made unless a new Certificate of Occupancy is issued. All TCOs have an expiration date. A TCO typically expires ninety (90) days after the date of issuance. When a TCO expires and is not renewed, it may be difficult or impossible to buy insurance, refinance, or sell units. In New York City, it is common for Sponsors to commence unit closings when some or all units are covered by a TCO rather than a FCO. Sponsor anticipates this scenario may occur. Sponsor and its principals will undertake the responsibility for extending each TCO received prior to the expiration thereof, and ultimately for obtaining a FCO covering the entire Building within two (2) years from the date of the issuance of the first TCO. However, Sponsor and its principals make no representation or guarantee that DOB will issue the FCO within such two (2) year period. NOTWITHSTANDING THE FOREGOING, SPONSOR AND ITS PRINCIPALS ARE OBLIGATED TO PROCURE THE FINAL CERTIFICATE OF OCCUPANCY FOR THE ENTIRE BUILDING, AND SHALL EXERCISE BEST EFFORTS TO OBTAIN THE FCO WITHIN SUCH TWO YEAR PERIOD WHILE KEEPING THE TCO CURRENT. Unit Owners and the Board of Managers shall be obligated to cooperate with and refrain from obstructing Sponsor in these undertakings. Buyers are advised to visit the DOB website for further recommendations when purchasing a unit in a building that does not have a FCO. A Factsheet on Certificates of Occupancy is available on the DOB website at:

    http://www.nyc.gov/html/dob/downloads/pdf/co_factsheet.pdf.

    See the section "Rights and Obligations of the Sponsor" set forth in Part I of the

32. Purchasers are advised that all of the Common Elements in the Building may not be available for use at the time of the First Closing. While Sponsor will attempt to provide all Common Elements within a reasonable time, Sponsor will complete all Common Elements within twenty-four (24) months of the First Closing. Purchasers will not be entitled to any credit or abatement against the Purchase Price or the Common Charges if any of the Common Elements are not available for use on or after a Purchaser's Closing. Notwithstanding the foregoing, the Board of Managers shall have the right, but not the obligation, in its sole and absolute discretion, to adjust the budget for the First Year of Operations which is based on a fully operational building. The Board of Managers may reduce Common Charges, allocate surplus funds to a special purpose fund, retain surplus funds as the Working Capital Fund, or refund Common Charges.

    Sponsor reserves the right to use its majority vote on the Board of Managers to cause a refund to be issued to Unit Owners. If the actual expenses of operating the condominium are less than the projected expenses set forth in the budget for the First Year of Operations then, to the extent such excess was paid by such Unit Owner, the difference between the actual expenses and the full common charges will be refunded to all unit owners (including the Sponsor) on a pro-rated basis in the form of either a credit against future common charges or as a cash reimbursement to the extent that the Unit Owner (including the Sponsor) has sold the Unit prior to the receipt of the full credit. Sponsor makes no warranty or representation that the operating expenses during this period will be less than the actual common charges or as to the amount of any credit that may be available as a result of such computation.

    Notwithstanding the foregoing, if a refund is contemplated for the First or any subsequent year of condominium operation, such refund may only be effectuated if an independent certified public accountant, as part of its preparation of the yearly annual statement for the condominium has determined that a refund is warranted based on an excess payment of common charges by unit owners over actual expenses for the condominium and has determined the amount of such refund as part of its annual review. For purposes of this Offering Plan, an "excess payment of common charges" shall mean the actual expenses of the condominium were less than the projected expenses set forth in the Budget of the condominium. No refund may be given unless all expenses of the condominium are paid, including but not limited to, insurance premiums and reserve funds required by lenders. During the budget year following a year for which a refund was effectuated, no special assessment or increase in common charges shall be instituted to pay for any item which was set forth in the previous year's budget and which was refunded to unit owners as per the foregoing. Sponsor shall remain obligated to update the budget for the Condominium as required by Department of Law governing regulations. See the section "Rights and Obligations of the Sponsor" set forth in Part I of the Offering Plan.

33. The Housing Merchant Implied Warranty (General Business Law Article 36-B) does not apply to this offering because that statue applies only to new single family homes or new for sale units in a multi-unit residential structure which is five (5) stories or less in which title is transferred to Purchasers under a cooperative or condominium regime. As the Building is greater than five (5) stories, this statute is not applicable. Where the Housing Merchant Implied Warranty does not apply, a common law implied warranty does not exist; therefore, unless a warranty is expressly provided by Sponsor, none such exists. See Fumarelli v Marsam Dev., 92 NY2d 298, 301 [1998]; Bd. of Managers of Beacon Tower Condominium v 85 Adams St., LLC, 136 AD3d 680 [2d Dept 2016]; Pine St. Homeowners Ass'n v 20 Pine St. LLC, 109

AD3d 733 [1st Dept 2013]. Sponsor does not warrant the materials or workmanship of construction in Units, Limited Common Elements, or Common Elements. Sponsor does not warrant the materials, workmanship, installation or operation of any appliances, equipment or fixtures. Nevertheless, Sponsor has the absolute obligation to design and build the Building in accordance with applicable law, codes, regulations, filed plans and specifications, and locally accepted building practices for items which are not covered by codes. Sponsor's obligations, regardless of any limitations in any warranty or in the Offering Plan, cannot go below the duty to construct the Building in accordance with all applicable Laws and the Plans and Specifications, and any conflict between any such disclosures and Sponsor's obligation to construct the Building in accordance with all applicable Laws and the Plans and Specifications shall be resolved in favor of the latter. NO DISCLAIMER OR LIMITATION OF LIABILITY ON SPONSOR'S PART SHALL APPLY TO SPONSOR'S OBLIGATIONS UNDER ALL APPLICABLE STATUTES, LAWS AND REGULATIONS.

Purchasers may have a claim under a breach of contract theory in the event Sponsor does not fulfill their obligation to have the building designed and built in accordance with applicable law, codes, regulations, filed plans and specifications, and locally accepted building practices for items which are not covered by codes or otherwise fails to fulfill its obligations under the Offering Plan or Purchase Agreement. In addition, Purchasers may utilize any applicable warranties provided by a manufacturer or contractor for the defective materials or workmanship; Sponsor is obligated to assign any warranties provided by manufacturers and contractors. Notwithstanding the foregoing, in the event that Purchaser or Unit Owner, as the case may be, makes any alterations to the Unit after taking possession, then the warranties provided in accordance with the terms of the Offering Plan or any repairs Sponsor has agreed to make in accordance with the terms of a signed inspection statement shall be void and of no further force or effect if the alteration directly or indirectly affected or damaged the subject matter of the warranty or repair.
See the section "Rights and Obligations of the Sponsor" set forth in Part I of the Offering Plan.

34. In the event of a patent or latent defect, Sponsor must be notified of the defect in writing (i) by the Unit Owner to whom Sponsor sold a Unit, within six (6) months following the closing of the sale of the Unit to the Unit Owner if the defect concerns that Unit (or if Sponsor permits occupancy of the Unit by a Purchaser under an interim lease, then within six (6) months after the commencement date of the interim lease), or (ii) by the Board of Managers, within the later of twelve (12) months from (a) the issuance of a TCO covering the entire Building, or (b) the first Unit Closing if the defect concerns the Common Elements. If Sponsor is not notified within these time periods, Sponsor shall not have any obligation to consider causing remediation of the problem. In no event, however, shall Sponsor be obligated to compel, or to take action to compel, the General Contractor (or any contractor or subcontractor) to perform under any guarantee or warranty given by it in connection with work performed at the Property. If properly notified, Sponsor shall cause the defect to be remediated in accordance with all applicable laws and the Plans and Specifications. See the section "Rights and Obligations of the Sponsor" set forth in Part I of the Offering Plan.

35. Neither Sponsor nor its principals, managers, members, agents, designees, employees or affiliates assumes any responsibility and will not be liable to repair or replace any of the following immaterial conditions: any condition resulting from normal wear and tear or natural deterioration from the normal movement, settlement and shrinkage or expansion of the

residential units or the Building generally and/or building materials; partial or total death of any trees, shrubs, bushes or other landscape improvements, protruding dry wall fastenings, ridging on gypsum board, lumber or minor floor shrinkage or gapping, door or window sticking due to weather, door warpage including, without limitation, warpage of any doors, minor scratches or chips in plastic, glass, metal, wood, vitreous china, stainless steel, tile porcelain or stone surfaces, bathroom finish, cracked grouting, adjustment or bi-fold door, walls not square, electrical plates or signs not straight, slight discoloration, expansion or shrinkage, slight separation between base and floor or differing coloration of any and all concrete, ceramic or stone tiles in gardens or kitchens; normal settlement and deflection or any minor consequential damage resulting therefrom including, without limitation, cracks in roof ballast or concrete cracks which do not reduce the structural integrity of the building generally; non-material deviations in the level of ceilings and non-material imperfections in ceiling finishes; non-material imperfections in painting finishes including, but not limited to, variances in color or texture; non-material deviations in the floors' levelness, buckling, gapping or sinking due to expansion and/ or shrinkage and/ or movement; slight misalignment of bathroom finishes and minor variation in grouting or tile thickness; minor noise, vibrations or odors from normal plumbing, heating, ventilation, air-conditioning and elevator operation, including boilers, condensing units, exhaust fans, elevator machine rooms and equipment; potential bathroom vents and ducts on the mechanical terraces, regardless of height, and any noise emanating from such vents and ducts shall be in accordance with permissible decibel levels pursuant to any rules and/or regulations governing noise levels in New York City; negligible floor noises and creaking; minor carpet or floor discoloring or stretching; non-material variations in width, length, thickness, finish, gaps or color range of wood flooring; minor chips, scratches, mars, breaks, dents, cracks, imperfections, or other immaterial conditions in each of the following: windows, window glass, frames and hardware; sliding glass doors, frames, door glass and hardware; louvers; shower doors; lighting fixtures, lenses, baffles and globes; all painted surfaces; all sinks, tubs, basins, water closets; kitchen cabinets, backsplashes and countertops; vanity tops and cabinets; all tile, stone or marble floors; saddles, all appliances; woodwork, millwork and doors; mirrors; all hardware; appliance cabinets; ceilings and flooring; after the closing of title to a unit, paint touch ups, repair dented appliances or replace light bulbs; non-material variations in tone or color of marble or stone or slight floors; saddles, all appliances; woodwork, millwork and doors; mirrors; all hardware appliance; appliance cabinets; ceilings and flooring; leaching or minor color variation in exterior color mortar and colored stone or brick, slight dimensional variations in brick joints, and mortar dropping on bricks and window surfaces; minor ponding and/or controlled drainage on terraces or balcony surfaces; television, radio or other telecommunications reception; slight discoloration to hardware or plumbing finishes; minor stains, runs, lumps, shags or imperfections in weave and fabric panels; terrace tile or pavers not laid flat, or slight color variation in tiles, pavers or mortar, or stained tiles or pavers; non-material scratches on window frames or glass; any other minor imperfection or immaterial condition, except as expressly warranted pursuant to this Offering Plan, provided it is indicated on written inspection statement and delivered to and acknowledge by Sponsor. See the section "Rights and Obligations of the Sponsor" set forth in Part I of the Offering Plan.

36. The Sponsor shall have an easement, to the extent permitted by law, to erect, maintain, repair and replace, from time to time, one or more signs on the Building for the purpose of advertising the sale or lease of any Unit in the Condominium, provided such signage does not unreasonably obstruct any Unit (other than an Unsold Unit). See the section "Rights and Obligations of the Sponsor" set forth in Part I of the Offering Plan.

37. Sponsor and/or its designee (and their respective successors and assigns) shall have an easement for so long as the Condominium shall remain in existence: (i) to erect, use, lease, maintain, repair, replace and operate a platform and other facilities for the purpose of erecting, using, leasing, licensing, maintaining, repairing, replacing and operating antennae, satellite dishes and other communications equipment on any part of any Roof of the Building that is designated a Residential Common Element and is not at the time Sponsor desires to use same, occupied or used for any Building installations or as a common recreational area for the Unit Owners; and (ii) to erect, use, lease, maintain, repair, replace and operate related electronic and other communications equipment in any portion of any mechanical equipment room that is designated a Residential Common Element and is not at the time Sponsor desires to use same, occupied by or used for any Building installations, and the right to erect partitions separating such portion from the balance of such equipment room; in each case, without the consent of, or charge by, the Board or any other Unit Owners; provided, however, that Sponsor (or its designee) shall give prior notice to the Board of Managers of the type and location of any such equipment before installation. Any obligations of Sponsor under any lease, license or other right of use granted by Sponsor with respect to any roof or the aforesaid mechanical equipment room shall be the obligation solely of Sponsor and not of the Condominium or the Board of Managers and any rights of Sponsor, including, without limitation, the right to receive rent or other consideration for such lease, license or other right of use, shall be the right solely of Sponsor and not of the Condominium. In connection with such easements and related rights, Sponsor and its designee (and their respective successors and assigns) and the respective tenants and licensees shall each have, to the extent necessary or advisable for such erection, use, lease, maintenance, repair, replacement and operation, an easement in common with all Unit Owners for ingress, egress and the use of any Common Elements. The Units shall be subject to such easement. The Unit Owners will not have any interest in the rents, profits or revenues from the rental, use or sale of any such space pursuant to the aforementioned easements and rights.

    See the section "Rights and Obligations of the Sponsor" set forth in Part I of the Plan.

38. If a Purchaser takes possession of a Unit prior to closing title through an Interim Lease, Purchaser will assume the risk of loss and the obligation to repair damage not covered by insurance already in place. Purchasers must obtain casualty insurance pursuant to the terms hereof. A person in possession who is not an owner cannot insure the Unit since they have no ownership interest, and the Unit cannot be doubly insured. The risk of loss is assumed by a Purchaser who has taken possession of the Unit prior to closing to the extent that such loss is not covered by the Condominium's or Sponsor's insurance. See the sections "Rights and Obligations of the Sponsor" and "Rights and Obligations of Unit Owners and The Board of Managers" set forth in Part I of the Offering Plan.

39. Sponsor may not exercise veto power over expenses described in Schedule B of Part I of the Offering Plan or expenses required:

    i. to comply with applicable laws or regulations; or
    ii. to remedy any notice of violation; or
    iii. to remedy any work ordered by an insurer; or
    iv. any matter affecting the health or safety of the occupants of the Building.

Sponsor may exercise veto power over expenses other than those described above for a period ending not more than five (5) years after the closing of the first Unit or whenever the Unsold Units constitute less than twenty-five percent (25%) of the common interest, whichever is sooner. See the section "Control by The Sponsor" set forth in Part I of the Offering Plan.

40. For a maximum of two (2) years from the date of the recording of the Declaration in the City Register's Office, as long as the Sponsor continues to hold fifty-one percent (51%) or more in number of the Units, the Sponsor's prior written consent shall be required in order to amend either the Declaration or the By-Laws. Furthermore, so long as Sponsor or Successor Sponsor shall own Unsold Units constituting twenty-five percent (25%) or more of the Common Interest, or for a period of five (5) years after closing of title to the first Unit, whichever is sooner, the Board of Managers may not, without the prior written consent of the Sponsor, (i) make any addition, alteration or improvement to the Common Elements or to any Unsold Unit, or (ii) borrow money on behalf of the Condominium (except where necessary to perform work required by law to the extent that existing reserves are insufficient), or (iii) provide for new or additional services other than those provided for in Schedule B hereof. Sponsor shall have the right to withhold its consent to any of the foregoing actions except where otherwise noted. Notwithstanding the above, Sponsor's consent shall not be withheld for expenses required to comply with applicable law, to remedy any notice of violation, to comply with any work order of an insurer, or for any matter affecting the health or safety of the occupants of the Building. While Sponsor has voting control of the Board of Managers, Sponsor will not reduce or eliminate the services to be provided to the Condominium as set forth in this Offering Plan. See the section "Control by The Sponsor" set forth in Part I of the Offering Plan.

41. Under the By-Laws of the Condominium, the affairs of the Condominium will be managed by a Board of Managers consisting of five (5) persons. However, the Board of Managers will initially consist of one (1) person designated by Sponsor. The initial members of the Board of Managers will be Bentley Zhao, who is the principal of the Sponsor. See the section "Board of Managers" set forth in Part I of the Offering Plan.

42. Other than a sale or lease by Sponsor, a successor of Sponsor, a Registered Mortgagee or their assignee, a sale or lease from a Unit Owner to an immediate family member, or a sale or lease from an ownership entity to an affiliate of said ownership entity, any lease or sale of a Residential Unit shall be subject to the Board of Managers' right of first refusal. Any contract to sell a Residential Unit, together with the Appurtenant Interests, and any lease of any Residential Unit ("Sale Agreement" or "Lease Agreement") shall contain the following language: "This agreement and the rights and obligations of the parties hereunder are hereby made expressly subject to the rights if any, of the Board of Managers of the Condominium with respect to the transaction embodied herein pursuant to the terms of the by-laws of the Condominium, as the same may have been amended." This right of first refusal does not apply to any Sponsor-held Units. See the section "Rights and Obligations of Unit Owners and the Board of Managers" set forth in Part I of the Offering Plan.

43. A Unit Owner must obtain at the time of Closing "interior unit coverage", which is "walls-in" coverage also referred to as an HO-6 policy insurance. See the section "Rights and Obligations of Unit Owners and the Board of Managers" set forth in Part I of the Offering Plan.

44. The Board of Managers will have right of access to all roof areas including setback roofs and

including any and all private terraces and balconies for necessary inspection, maintenance or repairs. See the section "Rights and Obligations of Unit Owners and the Board of Managers" set forth in Part I of the Offering Plan.

45. No Unit Owner shall make any addition, alteration, repair or improvement in their Unit, Limited Common Elements, or to the Common Elements appurtenant to their Unit, without the prior written approval of the Board of Managers, which approval will not be unreasonably withheld, provided that the addition, alteration, repair or improvement may be made while retaining the structural integrity of the Building. See the section "Rights and Obligations of Unit Owners and the Board of Managers" set forth in Part I of the Offering Plan.

46. The public areas of the Condominium and those residential areas exposed to public view or other Unit Owners shall be kept in good appearance, in conformity with the dignity and character of the Building, as determined by the Board of Managers in its sole discretion, by (i) the Board of Managers, with respect to such parts of the Building required to be maintained by the Board of Managers, and (ii) each Unit Owner with respect to interior surfaces of windows and shades, venetian or other blinds, drapes, curtains, or other window decorations in or appurtenant to such Unit Owner's Unit. To promote a consistent appearance of the Building from the outside, no Residential Unit Owner shall be permitted to enclose, erect a greenhouse, and/or alter a terrace or balcony appurtenant to a Unit in such a way that will alter the conformity of the Building, without the prior written approval of the Board of Managers. The Board of Managers may issue regulations concerning the size, type, and color of window treatments to be installed on the windows of Units in other to provide a visually harmonious appearance. The Board of Managers may limit the types of personal items, furnishings, and plantings that may be placed on terraces or balconies appurtenant to a Unit. See the section "Rights and Obligations of Unit Owners and the Board of Managers" set forth in Part I of the Offering Plan.

47. There is no known mold growth at the Property. Purchasers are advised that the prevention of the growth of mold in a Unit is the responsibility of each Unit Owner. Construction is not, and cannot be, designed to exclude mold spores. Whether a Unit Owner experiences mold growth depends largely on how such Unit Owner manages and maintains their Unit. Unit Owners will need to take actions to prevent conditions which cause the mold or mildew, and it is the responsibility of each Unit Owner to ensure that they take the necessary precautions to prevent mold from becoming a problem in such Unit Owner's Unit. Unless the existence of mold occurs within one (1) month or earlier of Closing (unless there is a latent defect due to faulty construction by Sponsor so that mold could not be discovered within one (1) month of Closing), and is caused by faulty construction by Sponsor, Sponsor will not be liable to Purchaser with respect to the presence and/or existence of molds, mildew and/or microscopic spores. This provision shall survive closing of title. See the section "Rights and Obligations of Unit Owners and the Board of Managers" set forth in Part I of the Offering Plan.

48. Purchaser covenants and agrees that it shall not list the Unit for sale, resale or lease with any broker or otherwise advertise, promote, or publicize the availability of the Unit for sale, resale or lease prior to the closing of title and for one (1) year thereafter. Any such listing of the Unit or form of advertising, promotion or publicizing of the Unit by Purchaser or its agents or representatives prior to the closing of title shall be an Event of Default under the Purchase Agreement, entitling Sponsor to the remedies set forth in Article 12 of the Purchase

Agreement. These provisions shall survive the closing of title. See the section "Rights and Obligations of Unit Owners and the Board of Managers" set forth in Part I of the Offering Plan.

49. No birds, animals or reptiles, except dogs or cats, shall be permitted in any Unit unless the same shall have been expressly permitted in writing by the Board of Managers or the Managing Agent, and such permission shall be revocable at any time by the Board of Managers or Managing Agent in their sole discretion. In no event shall more than two (2) animals be permitted in any Unit. No pet shall be permitted in the Common Elements, including dogs and cats, unless carried or on a leash. See the section "Rights and Obligations of Unit Owners and the Board of Managers" set forth in Part I of the Offering Plan.

50. Smoking and using electronic cigarettes is prohibited at all times in all enclosed common areas of the Building, as required by law. Enclosed common areas of the Building include, but is not limited to, indoor Common Elements such as a lobby, hallway, and stairway. Smoking and using electronic cigarettes is permitted at all times in all dwelling units and outdoor areas, unless otherwise restricted by law. This policy applies to any person on the premises. Complaints about violations shall be made promptly to the Board of Managers. Complaints should be made in writing and should be as specific as possible, including the date, approximate time, location where smoke was observed, description of incident, and apparent source of smoke. Unit Owners shall provide to prospective buyers or renters of their Units a copy of this Smoking Policy including by annexing it to any contract of sale or lease of their Unit. See the section "Rights and Obligations of Unit Owners and the Board of Managers" set forth in Part I of the Offering Plan.

51. Notwithstanding the disclosures set forth in the Plan pertaining to Sponsor's application for 421-a Benefits for the Building, Sponsor makes no representation or warranty that the Building will receive 421-a benefits after completion of construction, and no representation or warranty as to the date such 421-a Benefits will take effect. Section 421-a partial real estate tax benefits once granted may be revoked or reduced for non-payment or underpayment of taxes and for certain other reasons. In the event that 421-a benefits are not granted for any reason, then the real estate tax obligation for the Units will be based on the Units' assessed valuation, as determined by the New York City Department of Finance, multiplied by the then applicable tax rate and, as a result, real estate taxes would be significantly higher than if the Section 421-a Benefits had been granted. In such event, Purchasers shall not be entitled to a right of rescission.

PURCHASERS SHOULD NOT RELY UPON THE ISSUANCE OF 421-A TAX BENEFITS IN THEIR DECISIONS TO PURCHASE A UNIT, AS THE TAX BENEFITS MAY BE VERY DIFFICULT TO OBTAIN.

Sponsor has submitted an application to the New York City Department of Housing Preservation and Development ("HPD") and obtained a 421-a Preliminary Certificate of Eligibility for the Property on April 28, 2016, which will entitle Sponsor to 421-a benefits for a period of three (3) years after commencement of construction. Upon the issuance of a TCO or a final CO for the building, Sponsor shall submit an application to HPD for a Final Certificate of Eligibility. Some requirements to obtain a 421-a tax exemption include: the use of Energy Star appliances, water heaters, and boilers, Units cannot be used as a hotel or for Single Room Occupancy purposes, no other exemption benefits are claimed, buildings with

more than 50 Units must pay prevailing wages, an application for a Final Certificate of Eligibility must be submitted within 180 days of completion, a statement from an architect regarding the date construction was completed, a statement from a CPA as to the development cost, a copy of the Plan, proof of registration with HPD, and HPD fees. Sponsor represents that it will use reasonable efforts to obtain 421-a benefits following completion of construction. Sponsor will keep all records required by HPD to obtain a Final Certificate of Eligibility for post-construction 421-a benefits, and will make said records available to HPD whenever reasonably requested to do so. Sponsor will make all documents related to 421-a benefits available to the Condominium upon request, for inspection and copying for the duration of the 421-a benefits.

The Property Tax Professional has estimated 421-a benefits for the Building. This projection does not take into consideration that the exemption on increases to assessed value is subject to a limit ("AV Cap"). For the 2020/2021 tax year, the AV Cap is $92,675, and will increase 3%, compounded annually. The AV Cap applies on a per Unit basis, therefore, it is not permissible to assume the 421-a exemption benefits are distributed in exact proportion to Common Interest. The AV Cap is likely to affect larger Units in the Building so that 421-a tax savings for larger Units may be disproportionately less than the smaller Units and the total real estate taxes for all Units will be higher than the number set forth above. As Units are assessed every year, even if a Unit's assessed value is below the AV Cap in some years, the assessed value may exceed the AV Cap in subsequent years.

See the section "Real Estate Taxes" set forth in Part I of the Plan.

52. If separate tax assessments have not been made for individual Units prior to the closing of title to a Unit, Sponsor will collect from each Purchaser at closing, and will place in escrow in a separate account established by the Sponsor for that purpose, an amount equal to the Unit's estimated proportionate share of the real estate taxes projected to be due for the entire Property for the half of the tax year next commencing after the closing of said Unit (i.e., for either the first half or second half, depending on when the Unit closes). If the tax assessor indicates that more than one half of a tax year may elapse before the Units are individually assessed, Sponsor shall collect at closing Purchaser's proportionate share of taxes for the upcoming half and shall deposit the same in the account described above. Until separate tax assessments have been made for individual Units, a Purchaser that obtained financing may have to maintain a second tax escrow account with their lender. See the section "Real Estate Taxes" set forth in Part I of the Offering Plan.

53. On January 1, 2018, the Tax Cuts and Jobs Act of 2017 went into effect. This federal law significantly changed the previously existing Internal Revenue Code, including the taxes and deductions related to homeownership. Purchasers are advised to consult with a tax expert regarding whether the new law will affect the purchaser's taxes. See the section "Income Tax Deductions to Unit Owners" set forth in Part I of the Offering Plan.

54. Principals of Sponsor have executed the Certification of Sponsor and Principals set forth in Part II of the Offering Plan solely for Martin Act purposes. Consistent with a First Department decision in Board of Managers of 184 Thompson Street Condominium v. 184 Thompson Street Owner LLC, *et.al.*, 2013 N.Y. Slip Op 03574 (1st Dept. May 16, 2013), the principals of Sponsor expressly disclaim the existence of any private right of action for contract claims by

individual Unit Owners (or a board on their behalf) in connection with or arising solely from their execution of the Certification of Sponsor and Principals, absent liability under another statute or under an alter-ego or other veil-piercing theory. See the section “General” set forth in Part I of the Offering Plan.

55. Any portion of the unused floor area development rights that are now owned, subsequently acquired, or that may become available under the Zoning Resolution of the City of New York (the "Development Rights") shall be owned by the Sponsor, but may be utilized by Sponsor or any party acquiring the same from the Sponsor and merged into a zoning lot pursuant to the terms of a zoning lot development agreement or similar agreement or instrument (a "ZLDA"). If a ZLDA is a condition precedent to increasing Development Rights, Sponsor (including Sponsor’s successors, assignees, or designees) may enter into a ZLDA without the consent of the Board of Managers or Unit Owners to increase Development Rights.

    Sponsor or any entity to whom Sponsor conveys Development Rights shall have the right to amend the Declaration and any ZLDA that exists pertaining to the Building, in order to convey Development Rights. Sponsor or any entity to whom Sponsor conveys the Development Rights shall have the right to complete, file, and record all documents without the consent of the Unit Owners or the Board of Managers or any parties in interest to the Common Elements. The Unit Owners, the Board of Managers and/or any parties in interest to the Common Elements shall be deemed to have consented to the transfer of Development Rights and shall execute any documents evidencing said consent as are reasonably requested by Sponsor or any entity to whom Sponsor conveys the Development Rights.

    In the event Development Rights are transferred to an adjoining premises, the light, air and views from the Building may be negatively impacted. Notwithstanding the foregoing, neither Sponsor nor any entity to whom Sponsor conveys the Development Rights to may utilize the Development Rights to increase the size, height, bulk or density of any portion of the Property. Sponsor does not anticipate any Development Rights to be available upon completion of construction.

    See the section “Reservation of Air and Development Rights” set forth in Part I of the Offering Plan.

INTRODUCTION

Sponsor and Offer of Sale

3714 LIC DEVELOPMENT LLC (the "Sponsor"), a limited liability company organized under the laws of the State of New York, presents this offering plan (the "Plan") for the establishment of condominium ownership of the land (the "Land") consisting of approximately 19,500 square feet in the City and State of New York, located at 37-14 34th Street, Long Island City, NY 11101 and upon presentation of this Plan known as Block 375, Lot 24, as shown in the Queens County Tax Map, and a building (the "Building") existing on the Land to be called The 37-14 34th Street Condominium (the "Condominium"). Sponsor acquired the Property on June 7, 2017 by deed from 37-14 34th Street Property LLC, recorded in the City Register's Office on June 26, 2017 as CRFN 2017000234682.

This Offering Plan sets forth all the material terms of the offer to sell Units in the Condominium. The Condominium is subject to and will comply with the New York Condominium Act. The Offering Plan may be amended from time to time by amendment duly filed with the New York State Department of Law and served pursuant to 13 NYCRR § 20.1(d). The Offering Plan, including Part II, constitutes the entire offer of the Sponsor. Copies of the Offering Plan and all exhibits submitted to the Department of Law in connection with the filing of this Offering Plan will be available for inspection without charge by prospective Purchasers or their attorneys and copying at a reasonable charge at the Building after the on-site sales office is open and at the office of the selling agent or Sponsor. Copies of the Offering Plan will be available to prospective purchasers for a $200.00 deposit, made payable to Sponsor, in the form of a check; Sponsor shall hold the $200.00 check without depositing it, and shall return the check upon the earlier of (a) the return of the Offering Plan in good condition, such good condition to be determined at the sole discretion of Sponsor; or (b) the Closing of Purchaser's Unit. If such prospective purchaser does not close on a Unit, or Sponsor determined the Offering Plan was not returned in good condition, then the $200.00 check will be deposited by Sponsor and shall not be returned. Copies of the Offering Plan and all exhibits submitted to the Department of Law are also available for inspection, without charge, and copying, at a reasonable fee, at the New York State Department of Law, 28 Liberty Street, 21st Floor, New York, NY 10005.

The Land is under construction at the time of presentation of this Offering Plan; the structure is vacant. Sponsor is constructing a new Building pursuant to New York City Department of Building NB approved permits. A Certificate of Occupancy will be issued for the Building reflecting the planned construction. The Building will be constructed by Sponsor in accordance with all applicable law. The Sponsor expects that construction will be complete on or about October 1, 2020. On completion of construction, the Building will consist of seven (7) floors and a cellar. The Building will be divided into Seventy-Seven (77) Residential Units, One (1) Commercial Unit, Forty-Three (43) Parking Units, Forty-Two (42) Storage Units, and Six (6) Cabana Units.

Sponsor will be offering for sale, pursuant to this Offering Plan, the Seventy-Seven (77) Residential Units, One (1) Commercial Unit, Forty-Three (43) Parking Units, Forty-Two (42) Storage Units, and Six (6) Cabana Units in accordance with the schedule of sales prices (Schedule A) set forth in Part I. These prices have been set by Sponsor and are not subject to approval by the

Department of Law or any other governmental agency.

The Forty-Two (42) Storage Units are deeded storage spaces in the cellar offered only to Residential Unit Owners. The Six (6) Cabana Units are rooftop terraces offered only to Residential Unit Owners. The Forty-Five (45) Parking Units are deeded parking spaces located in the Building in the cellar. Parking Units will be offered to the public, including non-occupants of the Building. Purchasers should note the Parking Units may be subject to the requirements of MDL §60 and ZR25-412, as applicable. As such, the Parking Units can be rented by Sponsor or by Purchasers of a Parking Unit to persons other than an occupant of the Building. However, in the event a Parking Unit is being rented by a non-occupant and an occupant makes a written request for the Parking Unit, the Parking Unit must be offered to the occupant making such request. Purchasers are advised to refer to MDL §60 and ZR25-412 for further information.

Each Unit will have a refrigerator/freezer, dishwasher, washer and dryer, and range with oven and hood. Sponsor anticipates providing appliances in each of the Units manufactured by the manufacturers set forth in the Description of Property and Specifications and Building Condition. The Sponsor reserves the right to provide fixtures and appliances from a variety of manufacturers of Equal or Better Quality than those set forth in the Description of Property and Specifications and Building Condition. All fixtures and equipment described in this Offering Plan are included in the offering prices listed in Schedule A.

Sponsor has obtained financing from Whitehorse Onshore Credit Opportunities I, LLC, H.I.G. Whitehorse Trinity Credit, LLC, BOF Holdings, IV, LLC, and H.I.G. Global Credit Holdings, LLC, located at 600 Fifth Avenue, 23rd Floor, New York, NY 10020. The liens held by the Lender shall be subordinate to the Declaration. Each Unit being conveyed at a Closing and such Unit's appurtenant Common Interest will be released from the Lender's mortgage upon tender of the relevant payment as agreed to between Sponsor and Lender. Lender requires a minimum of fifteen (15) Residential Units be sold prior to declaring the Offering Plan effective.

Sponsor is retaining the unconditional right to rent Units in the Building after consummation of the Offering Plan that are being offered herein. Except for Interim Leases, Sponsor will not rent Units prior to First Closing. Unless this Offering Plan is abandoned, Sponsor will endeavor in good faith to sell Units in a reasonably timely manner rather than rent after the Offering Plan has been consummated but makes no representation that it will execute Purchase Agreements to sell more than fifteen percent (15%) of the Units necessary to declare the Offering Plan effective. Twelve (12) Residential Units satisfy the fifteen percent (15%) threshold. As Sponsor's right to rent Units is unconditional, this Offering Plan may not result in the creation of a condominium in which a majority of the Units are owned by owner-occupants or investors unrelated to Sponsor; Sponsor could effectively control the Board indefinitely. In the event Sponsor has rented a Unit after consummation of the Offering Plan, and subsequently sells the Unit pursuant to this Offering Plan, such sale of the Unit will provide that it will be sold in "as is" condition, except for any applicable warranties expressly provided in this Offering Plan.

If Sponsor sells 10 units or 20 percent of the total number of units in the condominium, whichever is less, which are not purchased for occupancy by the owner or one or more members of their immediate family, such purchaser will be deemed a Successor Sponsor pursuant to 13 NYCRR Section 20.1 (c)(1). Affiliates of Sponsor, a designee of Sponsor, or assignee of Sponsor

may also qualify as a Successor Sponsor under applicable regulations. A Successor Sponsor has the same rights and obligations of a Sponsor, but only in relationship to the Units' appurtenant Common Interest which such Successor Sponsor owns. Successor Sponsors have the same right to assign or designate a person or entity, whether related or unrelated to Sponsor, to succeed to their rights and obligations and any such assignee or designee shall also be deemed a Successor Sponsor. In the event that a Successor Sponsor wholly succeeds Sponsor, such an event shall not be deemed a material adverse change and shall not give rise to a right of rescission for any Purchaser.

After this Offering Plan has been declared effective, Sponsor will, by the Declaration of Condominium to be recorded in the Office of the City Register of the City of New York, submit the Property to Article 9-B of the Real Property Law of the State of New York (as amended, the "Condominium Act"). The proposed Declaration is set forth in Part II of this Offering Plan. The Declaration, together with the By-Laws of the Condominium, will be recorded by Sponsor at its sole cost and expense prior to its conveyance of title to the first Unit.

Development Rights

Any portion of the unused floor area development rights that are now owned, subsequently acquired, or that may become available under the Zoning Resolution of the City of New York (the "Development Rights") shall be owned by the Sponsor, but may be utilized by Sponsor or any party acquiring the same from the Sponsor and merged into a zoning lot pursuant to the terms of a zoning lot development agreement or similar agreement or instrument (a "ZLDA"). If a ZLDA is a condition precedent to increasing Development Rights, Sponsor (including Sponsor's successors, assignees, or designees) may enter into a ZLDA without the consent of the Board of Managers or Unit Owners to increase Development Rights.

Sponsor or any entity to whom Sponsor conveys Development Rights shall have the right to amend the Declaration and any ZLDA that exists pertaining to the Building, in order to convey Development Rights. Sponsor or any entity to whom Sponsor conveys the Development Rights shall have the right to complete, file, and record all documents without the consent of the Unit Owners or the Board of Managers or any parties in interest to the Common Elements. The Unit Owners, the Board of Managers and/or any parties in interest to the Common Elements shall be deemed to have consented to the transfer of Development Rights and shall execute any documents evidencing said consent as are reasonably requested by Sponsor or any entity to whom Sponsor conveys the Development Rights.

In the event Development Rights are transferred to an adjoining premises, the light, air and views from the Building may be negatively impacted. Notwithstanding the foregoing, neither Sponsor nor any entity to whom Sponsor conveys the Development Rights to may utilize the Development Rights to increase the size, height, bulk or density of any portion of the Property. Sponsor does not anticipate any Development Rights to be available upon completion of construction.

Features of Condominium Ownership

The ownership of a Unit in the Condominium is similar in many respects to the ownership

of a private one-family home. Each Unit Owner owns their Unit outright (in fee simple absolute) and is generally entitled to its exclusive possession and to its use for any legal purpose, subject to the provisions of the Declaration, By-Laws of the Condominium, and any Rules and Regulations promulgated by the Board of Managers; each Unit Owner is obligated to comply with Declaration, By-Laws of the Condominium, and any Rules and Regulations promulgated by the Board of Managers. A Unit Owner is also the owner, in common with all other Unit Owners, of all remaining parts of the Property, except for the Units themselves (collectively, called "Common Elements"). Common Elements are those areas intended to be devoted to the common use and enjoyment of all Unit Owners, including the land; the foundations, columns, girders, beams, supports, exterior walls of the Building, and all joists; the central and appurtenant installations and equipment for services such as power, light, telephone, hot and cold water, sewer and fire safety, the meter rooms, the stairwell from the cellar to the roof and the roof deck; roof and the bulkhead roof. Each Unit Owner's proportionate share ("Common Interest") of the Common Elements has been determined pursuant to Condominium Act §339-i. Elements which are for the use of a specified Unit (or Units) to the exclusion of all others are known as "Limited Common Elements." Limited Common Elements are those Common Elements that a Unit Owner or Unit Owners will have the exclusive right to use. See the section "Schedule A" set forth in Part I of the Offering Plan.

A Unit Owner may sell or lease their Unit subject to the terms and restrictions set forth in the Declaration and By-Laws, including, but not limited to, the Board of Managers' right of first refusal.

Each Unit may be separately mortgaged and the Unit Owner will be responsible for interest and amortization payments on the mortgage, if any encumbering such Unit Owner's Unit. A Unit is not subject to the lien of any mortgage placed by other Unit Owners on their Units.

Each Unit Owner will be assessed and taxed separately for real estate tax purposes and, therefore, no Unit Owner will be liable for the payment of real estate taxes on any other Unit. In the opinion of counsel for Sponsor, payments of real estate taxes and interest on any mortgage affecting the Owners Unit, will be deductible for federal, state, and local income tax purposes (see Counsel's Tax Opinion set forth in Part I) subject to the conditions contained in such opinion.

Each Unit Owner, at the Unit Owner's sole cost, may decorate and alter the interior of the Unit Owner's Unit in any way that the Unit Owner desires, subject to the provisions of the By-Laws and the Rules and Regulations promulgated by the Condominium and all applicable Laws. Each Unit Owner will be solely responsible for the cost, ordinary and extraordinary, of maintenance of and repairs to the Unit Owner's Unit and all plumbing, heating, telecommunications, sanitary, and electrical systems, fixtures and equipment located within the Unit and connections to common lines which exclusively serve such Unit Owner's Unit, and for the cost of all utilities that are individually metered to a Unit Owner's Unit.

Sponsor reserves the right to control the Board of Managers for a period of time until the earlier to occur of (a) thirty (30) days after the date by which one hundred percent (100%) of the Units have been conveyed to Purchasers; or (b) five (5) years after the First Closing (the "Sponsor Control Period"). Sponsor reserves the right to relinquish control of the Board of Managers prior to the expiration of the Sponsor Control Period. However, as long as Sponsor owns a Unit, Sponsor will be entitled to appoint one (1) member of the Board of Managers and shall be entitled to cast

one vote for each .0001% of Common Interest attributable to their Unit(s). In the event that there is a Successor Sponsor and Sponsor still owns a Unit, only Sponsor may appoint one (1) member of the Board of Managers. The Board of Managers will be elected by the Unit Owners after the Sponsor Control Period, and will be charged with the primary obligation for operating the Property. The By-Laws do not provide that after the Sponsor relinquishes control of the Board of Managers that Board of Managers members be owner-occupants. Each Unit Owner's vote will be weighed in accordance with the Owner's percentage interest in the Common Elements. A description of the Unit Owner's right to vote for and to serve as a member of the Board of Managers, and a description of the rights and obligations of the Board of Managers is contained in the Section "Rights and Obligations of the Board of Managers" in Part I of the Offering Plan and in the Condominium's By-Laws.

The Board of Managers will make most decisions concerning the manner in which the Condominium will be maintained. This will include making decisions regarding hiring of a management company to manage the day-to-day operations of the Condominium, preparing budgets, entering into service contracts, and the making of repairs and improvements, all of which may impact the amount of the Common Charges.

The Board of Managers will be responsible for paying, among other things, the cost of utilities consumed in the Common Elements of the Building, repairing, maintaining, and making necessary replacements to the Common Elements and insurance against casualties causing damage to the Building and Common Elements and certain other potential liabilities. See the Schedule B and the notes thereto which more fully discuss the Common Expenses which will be paid by the Board of Managers, and see Schedule B-1 regarding estimated energy and utility costs to be paid by each separate Unit Owner.

A Unit Owner must obtain at the time of Closing "interior unit coverage", which is "walls-in" coverage also referred to as an HO-6 policy insurance. See the section "Rights and Obligations of Unit Owners and the Board of Managers" set forth in Part I of the Offering Plan.

Each Unit Owner must pay monthly Common Charges in accordance with the Declaration, the By-Laws, and the applicable provisions of the Condominium Act, in order to fund payment of the Common Expenses incurred in the operation of the Property and the maintenance of the Common Elements. The Board of Managers will assess Common Charges against each Unit Owners in accordance with its Common Interest based on the Board of Managers' estimate of Common Expenses which is based on the projected budget for each twelve (12) month period. The estimated Common Charges for each Unit for the First Year of Operations; see the section "Schedule A" set forth in Part I of the Offering Plan.

This offering is made only to individuals aged 18 years or older, and entities qualified to do business in the State of New York who are competent to own real estate in the State of New York.

THE PURCHASE OF A CONDOMINIUM UNIT HAS MANY SIGNIFICANT LEGAL AND FINANCIAL CONSEQUENCES. THE ATTORNEY GENERAL STRONGLY URGES YOU TO CONSULT WITH AN ATTORNEY BEFORE SIGNING A PURCHASE AGREEMENT.

DEFINITIONS

The following terms used in this Offering Plan and in Article 9-B of the Real Property Law, have the following meanings:

- Board of Managers: The governing body of the Condominium initially comprised of three (3) managers appointed by Sponsor.

- Building: The structure containing the Units and the Common Elements of the Condominium (other than the land under the Building).

- By-Laws: One of the documents governing the operation of the Condominium, the form of which is set forth in Part II of the Offering Plan.

- Cabana Unit: Any space designated as a Cabana Unit in the Floor Plans. For budgeting and voting purposes, a Cabana Unit shall be treated as a Residential Unit.

- Cabana Unit Owner: An owner of a Cabana Unit.

- City Register's Office: The Office of the City Register of The City of New York.

- Closing: Including words of similar import are used synonymously and mean the payment of the purchase price, and the transfer of legal ownership of a Unit pursuant to this Offering Plan and the Purchase Agreement.

- Closing Date: The date scheduled for the closing of title to a Unit by Sponsor as same may be adjourned in accordance with the terms of the Purchase Agreement.

- Commercial Unit: The Unit designated as the Commercial Unit in the Floor Plans.

- Common Charges: Assessments payable to the Board of Managers by each Unit Owner for the purpose of meeting Common Expenses.

- Common Elements: Those areas intended to be devoted to the common use and enjoyment of all Unit Owners as set forth in the Declaration.

- Common Expenses: The costs and expenses in connection with the repair, maintenance, replacement, restoration and operation of, and any alteration, addition or improvement to, the Common Elements, including any reserve established in anticipation of the aforesaid costs and expenses.

- Common Interest: The proportionate, undivided interest in fee simple absolute in the Common Elements pertaining to each Unit set forth in the Declaration. Such interest is expressed as a numerical percentage. The total of all Common Interest percentages pertaining to all Units equals 100%. The Common Interest of the Unit is the basis for determining, among other things, a Unit Owner's (a) proportionate share of the Common

Expenses and (b) proportionate share of any distributions upon termination of the Condominium.

- Condominium: The condominium which will be established pursuant to the Declaration and governed by the By-Laws.

- Condominium Act: Article 9-B of the New York State Real Property Law.

- Declaration: The recorded instrument by which the Property is submitted to the provisions of the Condominium Act, as such instrument may be amended from time to time, consistent with law and the By-Laws. The By-Laws, which govern the operation of the Condominium, are part of the Declaration.

- Department of Building: The Department of Buildings of the City of New York.

- Department of Law: The New York State Department of Law of the New York State Office of the Attorney General, Real Estate Finance Bureau.

- Deposit: The payment or payments required to be paid by Purchaser at the time a Purchase Agreement is tendered to Sponsor or at the time or times prior to Closing as provided in the Purchase Agreement.

- Development Rights: The unused floor area development rights that are now owned, subsequently acquired or that may become available under the New York City Zoning Resolution.

- Escrow Account: The escrow account maintained by Marans, Weisz & Newman LLC, as escrow agent at Capital One Bank, N.A., 299 Park Avenue, New York, NY 10171.

- Escrow Agent: Marans Weisz & Newman, LLC

- Equal or Better Quality: Comparable or better quality as recognized by industry standards for performance, efficiency, longevity, and/or classifications, as applicable.

- First Closing: First closing of title to a Residential Unit in the Condominium to a Purchaser under the Offering Plan.

- First Year Budget: The projected budget for the First Year of Operations located in Schedule B.

- First Year of Operations: The projected date range for the first year of operations for the Condominium, as set forth in the Offering Plan.

- Floor Plans: Floor plans prepared by Sponsor's architect showing the division of the Property into the Units and Common Elements and to be filed with the Declaration.

- Insurance Trustee: A bank or trust company in the State of New York from time to time

appointed to serve as such by the Board of Managers. Sponsor's Registered Mortgagee shall serve as the Insurance Trustee for such time as Sponsor has a mortgage loan encumbering any Unsold Units. The Lender shall be the initial Insurance Trustee, and shall remain the Insurance Trustee until such time that the Lender's mortgage lien is satisfied.

- Land: The parcel of land on which the Building will be situated, as more particularly described in the Declaration.

- Lender: Whitehorse Onshore Credit Opportunities I, LLC, H.I.G. Whitehorse Trinity Credit, LLC, BOF Holdings, IV, LLC, and H.I.G. Global Credit Holdings, LLC, located at 600 Fifth Avenue, 23rd Floor, New York, NY 10020, together with their successors and/or assigns.

- Limited Common Elements: Those Common Elements for which a Unit Owner will have the exclusive right to use. Some examples of Limited Common Elements are rear yards, terraces and balconies accessed through particular Units.

- Managing Agent: The managing agent or manager of the Building at the time in question.

- Mansion Tax: An additional New York State real estate transfer tax that applies to residences where consideration is $1 million or more.

- Non-Residential Common Element: Those portions of the Common Elements intended to be devoted to the common use and enjoyment of the Non-Residential Unit Owners. Upon recording of this Declaration, no Non-Residential Common Elements exist; a subdivision of the Non-Residential Unit may create Non-Residential Common Elements in the future.

- Non-Residential Common Interest: The proportionate undivided interest, expressed as a numerical percentage, of each Non-Residential Unit Owner in the Common Elements. The total of all Non-Residential Common Interest percentages appurtenant to all Non-Residential Units equals to 100%.

- Non-Residential Unit: The Commercial Unit and any Units created by the subdivision thereof.

- Non-Residential Unit Owner: An owner of a Non-Residential Unit.

- Offering Plan: The offering plan submitted by the Sponsor to the Department of Law required in order to be able to sell Units in the Condominium.

- Parking Unit: Any space designated as a Parking Unit in the Floor Plans. For budgeting and voting purposes, a Parking Unit shall be treated as a Residential Unit.

- Parking Unit Owner: An owner of a Parking Unit.

- Permitted Exceptions: Encumbrances to the title to a Unit that a Purchaser agrees to take title subject to.

- Permitted Mortgage: A mortgage of a Unit or Units permitted to be placed thereon pursuant to the provisions of the By-Laws.

- Plans and Specifications: The plans and specifications for the Building which (to the extent required by law) are filed with, and approved by, the Department of Buildings and which plans and specifications may, from time to time, have been amended or changed, or may hereafter be amended or changed in accordance with the provisions of this Offering Plan.

- Property: The Land, the Building and other improvements thereon, and all easements, rights and appurtenances belonging thereto.

- Property Tax Professional: The real estate broker, appraiser, attorney or other professional familiar with the tax assessment practices in the locality in which the property is located that Sponsor retained to prepare the Property Tax Projection Letter.

- Property Tax Projection Letter: An estimate of the assessed valuation after completion of construction or rehabilitation from a real estate broker, appraiser, attorney or other professional familiar with the tax assessment practices in the locality in which the property is located.

- Purchase Agreement: The agreement to purchase a Unit pursuant to the Offering Plan, the form of which is set forth in Part II of the Offering Plan.

- Purchaser: A purchaser of a Unit pursuant to a Purchase Agreement.

- Registered Guarantor: A guarantor on a Registered Mortgage who has registered with the Board of Managers by supplying the Board with the name and address of the guarantor.

- Registered Mortgagee: The holder of a Registered Mortgage and shall include, without limitation, banks, financial institutions, and/or other lenders such as the Lender, its successors, assigns, and/or affiliates, as well as any lender that has provided mezzanine financing or preferred equity financing to Sponsor.

- Registered Mortgage: A first mortgage permitted to be placed upon a Unit pursuant to the By-Laws, the Lender's mortgage for so long as the Lender's mortgage encumbers a Unit, and/or any mezzanine finance loan or preferred equity loan provided to Sponsor so long as such loan encumbers a Unit.

- Reserve Fund: A fund established for the Condominium for major capital expenditures such as the renewal or replacement of building components or systems or the remedy of major building defects.

- Residential Unit: A Unit for residential use.

- Residential Unit Owner: A Unit Owner who has purchased a Residential Unit.

- Rules and Regulations: The rules and regulations of the Condominium made in accordance with the By-Laws. The rules and regulations, which will apply unless and until amended by the Board of Managers, are set forth as an addendum to the By-Laws in Part II.

- Schedule A: The section of Part I of the Offering Plan "Schedule of Purchase Prices and Other Financial Details For The First Full Year of Operation."

- Schedule B: The section of Part I of the Offering Plan "Schedule of Estimated Income and Expenses For The First Full Year of Operation."

- Schedule B-1: The section of Part I of the Offering Plan "Schedule of Estimated Utility Expenses for Individual Units."

- Selling Agent: The selling agent disclosed in the Identity of Parties section of Part I of the Offering Plan, or at any given time in question.

- Sponsor: The person, partnership, joint venture, corporation, company, trust, association or other entity which is offering the Units in this Condominium to the public at the given time in question.

- Sponsor Control Period: A period of time until the earlier to occur of (a) thirty (30) days after the date by which one hundred percent (100%) of the Units have been conveyed to Purchasers; or (b) five (5) years after the First Closing.

- Storage Unit: Any space designated as a Storage Unit in the Floor Plans. For budgeting and voting purposes, a Storage Unit shall be treated as a Residential Unit.

- Storage Unit Owner: An owner of a Storage Unit.

- Successor Sponsor: An affiliate of Sponsor, a designee or assignee of Sponsor, or a Purchaser of 10 units or 20 percent of the total number of Units in the Condominium, whichever is less, which are not purchased for occupancy by the owner or one or more members of their immediate family. A Successor Sponsor has the same rights and obligations of a Sponsor, but only in relationship to the Units' appurtenant Common Interest which such Successor Sponsor owns. Successor Sponsors have the same right to assign or designate a person or entity, whether related or unrelated to Sponsor, to succeed to their rights and obligations and any such assignee or designee shall also be deemed a Successor Sponsor. Any Successor Sponsor shall be promptly disclosed in an amendment to the Offering Plan and shall be subject to all obligations and disclosure requirements pertaining to its role as a Sponsor pursuant to applicable law.

- Unit: a part of the Property intended for any type of use or uses, and with an exit to a public street or highway or to Common Elements leading to a public street or highway, and may include such appurtenances as balcony, terrace, and patio. Each Unit is designated by number, letter or combination thereof or other official designations conforming to the tax lot number designating the Unit in the Declaration and on the Floor Plans.

- Unit Deed: A bargain and sale deed with covenant against grantor's acts, from Sponsor to a Purchaser, conveying title to the Unit and its appurtenant Common Interest.

- Unit Owner: An owner of any Unit. Two or more of such owners are collectively referred to as "Unit Owners."

- Unsold Units: Any Units owned by Sponsor or Successor Sponsor, other than any Unit purchased by and for the use of Sponsor or Successor Sponsor, until such time as the same have been sold.

- Working Capital Fund: A fund held and used for working capital, closing costs and adjustments, unanticipated increases in budgeted or additional Common Expenses, capital repairs or replacement or for such other appropriate purposes as will be determined by the Board of Managers.

- ZLDA: A zoning lot development agreement.

DESCRIPTION OF PROPERTY AND IMPROVEMENTS

The Property has a land area of approximately 19,500 square feet. The site will contain one building (the "Building") when construction is completed. The street address of the Property is 37-14 34th Street in the Borough of Queens, NY. The Building is located on 34th Street between 37th Avenue and 38th Avenue South.

The Condominium shall consist of Seventy-Seven (77) Residential Units, One (1) Commercial Unit, Forty-Three (43) Parking Units, Forty-Two (42) Storage Units, and Six (6) Cabana Units. The Building is a new building which will contain seven (7) floors and a cellar and two elevators, one serving each floor of the two towers. The Forty-Two (42) Storage Units are deeded storage spaces in the cellar. The Forty-Five (45) Parking Units are deeded parking spaces located in the Building in the cellar. The Six (6) Cabana Units are deeded rooftop terraces. The Building will be constructed in accordance with all applicable zoning and building laws which include the Zoning Resolution of the City of New York and New York City Construction Codes. A schedule of approved New York City Department of Building (DOB) plans for the work, including DOB applications, is specified in the Description of Property and Specifications and Building Condition set forth in Part II of this Offering Plan.

The cellar contains a office for management, a common laundry room with three washers and four dryers, and a pet spa room with water and drainage. The vestibule for each tower contains a mailbox for each Unit. The second floor contains forty bike racks, a conference room and lounge room in the north tower; the lounge room will have a sink, small refrigerator, and seating. In the south tower is a kids room and fitness room; the kids room will have book shelves, seating, and a sink; the fitness room will be provided three treadmills, an elliptical, a weight training set, a lat machine, a shoulder machine, a leg curl machine, a skillrow, and other miscellaneous gym equipment. The common terrace at the second floor will have space for outdoor yoga, outdoor seating, and landscaping. The rooftop terrace of each tower will be provided one grill and sink with outdoor seating. All of the above are Common Elements. The following Units have unfurnished 60sf balconies allocated as a Limited Common Element: N3A, N3G, N3I, N4A, N4G, N4I, N5A, N5F, N5G, N6A, N6E, N6F, N7A, N7C, N7D, S3A, S3G, S3H, S4A, S4G, S4H, S5A, S5G, S5H, S6A, S6E, S6F, S7A, S7C, and S7D. The following Units have unfurnished terraces allocated as a Limited Common Element: N2D, N6A, N6B, N7A, N7B, S2D, S6A, S6B, S7A, and S7B; refer to Schedule A and the Floor Plans for the size of these terraces. The Six (6) Cabana Units are not Limited Common Elements, these Units are deeded rooftop terraces.

A new Certificate of Occupancy will be issued reflecting the planned construction. The property is currently vacant and will remain unoccupied throughout construction, which is expected to be substantially completed on or about October 1, 2020. A Closing will take place only after the issuance of a temporary or final Certificate of Occupancy for the entire project or, issuance of a partial, temporary or final Certificate of Occupancy for the Unit closed or the building in which the Unit is located.

Each Unit will have a refrigerator/freezer, dishwasher, and range with oven and hood. Washer and dryer hookups will be provided within Units without a washer or dryer. Sponsor anticipates providing appliances in each of the Units manufactured by the manufacturers set forth in the Description of Prop0erty and Specifications and Building Condition. The Sponsor reserves

the right to provide fixtures and appliances from a variety of manufacturers of Equal or Better Quality than those set forth in the Description of Property and Specifications and Building Condition. All fixtures and equipment described in this Offering Plan are included in the offering prices listed in Schedule A.

Electricity is provided by Consolidated Edison, Inc. The electricity to each Unit will be separately metered by Consolidated Edison, Inc and will be paid for by the owner of such Unit. The electricity consumed in the Common Elements will be borne by the Unit Owners as a Common Charge and be allocated to each Residential Unit in proportion to their Common Interest. The electricity consumed in the Non-Residential Units will be separately metered and the cost of electricity consumed in the Commercial Unit will be borne by the Commercial Unit Owner.

Gas is provided by National Grid. The gas consumed in the Residential Units for cooking and generation of centralized domestic hot water will be commonly metered. The cost of gas consumed in the Common Elements will be borne by the Residential Unit Owners as a Common Charge and be allocated to each Residential Unit in proportion to their Common Interest. The gas consumed in the Commercial Unit will be sub-metered and the cost of gas consumed in the Commercial Unit will be borne by the Commercial Unit Owner.

Water is provided by the City of New York. The water to each Residential Unit will be commonly metered by the City of New York. The cost of water consumed in the Common Elements and Residential Units will be borne by the Residential Unit Owners as a Common Charge and be allocated to each Residential Unit in proportion to their Common Interest. The water to the Commercial Unit will be sub-metered and water consumed in the Commercial Unit will be borne by the Non-residential Unit Owners as a Common Charge.

All Residential Units will be pre-wired for telephone, television, and internet service. Each Unit Owner will be responsible to contact a service provider to establish service to the pre-wired Unit. Every Unit Owner will be required to pay their associated service charges and any initial charges for activating services for the Unit.

Purchasers are advised that all of the Common Elements in the Building may not be available for use at the time of the First Closing. While Sponsor will attempt to provide all Common Elements within a reasonable time, Sponsor will complete all Common Elements within twenty-four (24) months of the First Closing. Purchasers will not be entitled to any credit or abatement against the Purchase Price or the Common Charges if any of the Common Elements are not available for use on or after a Purchaser's Closing. Notwithstanding the foregoing, the Board of Managers shall have the right, but not the obligation, in its sole and absolute discretion, to adjust the budget for the First Year of Operations which is based on a fully operational building. The Board of Managers may reduce Common Charges, allocate surplus funds to a special purpose fund, retain surplus funds as the Working Capital Fund, or refund Common Charges.

Sponsor reserves the right to use its majority vote on the Board of Managers to cause a refund to be issued to Unit Owners. If the actual expenses of operating the condominium are less than the projected expenses set forth in the budget for the First Year of Operations then, to the extent such excess was paid by such Unit Owner, the difference between the actual expenses and the full common charges will be refunded to all unit owners (including the Sponsor) on a pro-rated

basis in the form of either a credit against future common charges or as a cash reimbursement to the extent that the Unit Owner (including the Sponsor) has sold the Unit prior to the receipt of the full credit. Sponsor makes no warranty or representation that the operating expenses during this period will be less than the actual common charges or as to the amount of any credit that may be available as a result of such computation.

Notwithstanding the foregoing, if a refund is contemplated for the First or any subsequent year of condominium operation, such refund may only be effectuated if an independent certified public accountant, as part of its preparation of the yearly annual statement for the condominium has determined that a refund is warranted based on an excess payment of common charges by unit owners over actual expenses for the condominium and has determined the amount of such refund as part of its annual review. For purposes of this Offering Plan, an "excess payment of common charges" shall mean the actual expenses of the condominium were less than the projected expenses set forth in the Budget of the condominium. No refund may be given unless all expenses of the condominium are paid, including but not limited to, insurance premiums and reserve funds required by lenders. During the budget year following a year for which a refund was effectuated, no special assessment or increase in common charges shall be instituted to pay for any item which was set forth in the previous year's budget and which was refunded to unit owners as per the foregoing. Sponsor shall remain obligated to update the budget for the Condominium as required by Department of Law governing regulations

Limited Common Elements are Common Elements existing for the sole use and enjoyment of certain Unit Owners to the exclusion of all other Unit Owners. Limited Common Elements include but are not limited to any facilities (pipes, shut-off valves, wires, lines, conduits) that exclusively serve a Unit that are located behind its boundary walls or within its boundary walls but not readily accessible without damage to such boundary walls, balconies, terraces, or yards that are allocated for the exclusive use of an appurtenant Unit, as set forth in the Floor Plans.

Each Unit Owner of a Unit to which a Limited Common Element is appurtenant shall be responsible for the cost and performance of all painting, decorating and non-structural ordinary maintenance, repairs, cleaning and replacements to such Limited Common Element, including pipes, wires, and conduits exclusively servicing the Unit. However, any structural or non-ordinary repairs or replacements to a Limited Common Element shall be made by the Board of Managers, and the cost and expense thereof shall be charged to all Unit Owners as a Common Expense unless the need for such repair or replacement was caused by the wrongful or negligent act or omission of a Unit Owner or their tenants, guests, or invitees whereby the cost shall be charged to such Unit Owner. The Board of Managers shall have the right of access to, in, and through these areas for the purpose of doing building maintenance inspections. No structures of any kind may be erected on Limited Common Elements without the express written permission of the Board of Managers, except for temporary structures. Notwithstanding anything herein to the contrary, a Unit Owner who wishes to paint, decorate or make any other changes to a Limited Common Element appurtenant to their Unit, and which change deviates from the Limited Common Element as it was originally delivered by Sponsor, must first obtain express written permission from the Board of Managers; for as long as Sponsor owns at least one Unit, a Unit Owner must also obtain express written permission from the Sponsor.

Limited Common Elements and any cellar spaces are considered uninhabitable space and

may not be legally used as a bedroom or living room and to do so may result in a building code violation being issued for the Building. Any cellar space has less light and air than ordinary living space and is more susceptible to dampness. Refer to Schedule A for the amount of Limited Common Elements available to each Unit Owner.

New York City's Façade Inspection Safety Program ("FISP"), also known as Local Law 11/98 applies to this Building. FISP requires that owners of buildings, with greater than six stories above grade, have their exterior walls and appurtenances inspected periodically. FISP reports are due once in five-year cycles. Once a new building is issued the first temporary Certificate of Occupancy, the five-year "grace period" begins. After this five-year period is over, the building must file during the next applicable cycle. Unless Sponsor still controls the Board at such time, the obligation to comply with FISP shall be solely on the Unit Owner-controlled Board. Sponsor shall have no responsibility or obligation to organize such inspections after the termination of the Sponsor Control Period. The cost of retaining a Qualified Exterior Wall Inspector to perform the inspection and file the report, as well as making any necessary repairs, will be a Common Expense in the future. The cost of retaining a Qualified Exterior Wall Inspector is currently approximately $5,000; Sponsor makes no warranty or representation that the law will not change or what the actual cost of compliance will be. In the same fashion, the Condominium Board will be responsible for maintaining the sidewalk(s) in accordance with the requirements of the Department of Transportation. See the section "Description of Property and Improvements" set forth in Part I of the Offering Plan.

No Residential Units will have lot line windows. There are fixed, glazed, sprinklered windows on the north façade in the residential corridor on the 2nd, 3rd, 4th, and 5th floor. Characterization of a window as a lot line window generally means that depending on the proximity and height of improvements on the adjacent property, the lot line window is required by law to be protected against fire occurring in the improvements on adjacent lots in a manner satisfactory to the Department of Buildings. Such fire protection can include sealing the window completely, sprinklering it, using glass block instead of ordinary window glass, or using windows made of steel with wire mesh. Based on the distance from the adjacent property line, the windows on the north side of the Building are not required to be protected and would not need to be closed in the event the adjacent property owner enlarges its property, however, those windows do not count towards minimum light and ventilation standards.

The Building is not a designated landmark nor is it in a landmark district.

Environmental Remediation

The Site is approximately 19,500 square feet in area. The site previously contained a large one-story commercial building consisting of a warehouse and factory that was constructed in 1947. Prior to 1947, the site was occupied by residential buildings. The area of concern includes soil vapor beneath the western portion of the site, which contained a parking garage and storage space. During testing, petroleum related VOCs were detected at elevated concentrations. Site-Specific (Track 1) Soil Cleanup Objectives (SOC) were established. Following soil remediation, the Site met the Track 1 Site-Specific SCOs which is protective of public health and the environment for its planned use. Engineering controls such as monitoring are not required for a Track 1 cleanup. Track 1 does not contain use restrictions and do not require long term institutional or engineering

controls; a Site Management Plan is not required.

The site will be protected by a vapor barrier installed underneath the slab in the cellar and first floor of the property as well as along the outside surface of foundation walls from bottom to grade. The vapor barrier will be installed as a precautionary measure. The vapor barrier does not require any special operation or maintenance activities. If the vapor barrier is breached during future construction activities, vapor barrier material will be fastened to the existing vapor barrier material and fastened to the walls under the floor slab of the building in accordance with manufacturer specification.

For more details and to view the publicly available documents, Purchasers and Unit Owners can visit the following website of OER:

https://a002-epic.nyc.gov/app/search/advanced

Project ID: 15CVCP141Q

Project Number: 15EH-A153Q

Sponsor reserves the right to amend or modify, in any way, the Plans and Specifications (including without limitation, changing materials, appliances, equipment, fixtures and other construction details) and to substitute in place of any materials, appliances, equipment, and fixtures set forth therein, materials, appliances, equipment and of a substantially Equal or Better Quality, provided that any necessary approval of any governmental authority having jurisdiction is first obtained.

LOCATION AND AREA INFORMATION

Location

The Building will be located on 34th Street between 37th Avenue and 38th Avenue in the neighborhood known as Long Island City in the Borough of Queens. Long Island City is a residential and commercial neighborhood located on the extreme western tip of Queens. It is bordered by Astoria to the north; the East River to the west; Hazen Street, 49th Street, and New Calvary Cemetery in Sunnyside to the east; and Newtown Creek—which separates Queens from Greenpoint, Brooklyn—to the south. The area is part of Queens Community Board 1 to the north and Queens Community Board 2 to the south.

No representation is made that future construction in the neighborhood surrounding the Property will not result in obstruction of the views from any window, portion of the façade or curtain wall, and/or terrace in the Building. The Sponsor has no other projects within the immediate vicinity of the Building and has no development projects approved by the NYC Department of Buildings that will be adjacent to or directly across the street from the Building. If any material change in the vicinity occurs that affects the use or enjoyment of the property while sales are ongoing, an amendment will be filed within 30 days after the information becomes known to the Sponsor disclosing the material change.

Educational Institutions

Grade Schools:

- P.S. 166 Henry Gradstein — 33-09 35th Avenue
- P.S. 112 Dutch Kills — 25-05 37th Avenue

Intermediate/Junior High Schools:

- Growing up Green Charter School — 39-37 28th Street
- I.S. 204 Oliver W. Holmes 3 — 6-41 28th Street

High Schools:

- Long Island City High School — 14-30 Broadway
- Energy Tech High School — 36-41 28th Street

Sponsor, however, makes no guarantee or representation as to which school a child residing at the Building may be able to actually attend.

Zoning and Use

The Property is located in a M1-2/R6A zoning district. M1 districts typically include light industrial uses, such as woodworking shops, repair shops, and wholesale service and storage facilities. Nearly all industrial uses are allowed in M1 districts if they meet the stringent M1 performance standards. Offices, hotels and most retail uses are also permitted. Certain community facilities, such as hospitals, are allowed in M1 districts only by special permit, but houses of worship are allowed as-of-right. R6A is a contextual district where the Quality Housing bulk regulations are mandatory. These regulations produce high lot coverage, six- to eight-story apartment buildings set at or near the street line. Designed to be compatible with older buildings found in medium-density neighborhoods,

Municipal Services

Transportation:

The nearest subway lines serving the area are the M and R Lines stopping at the 36th Street Station on the corner of 36th Street and Northern Boulevard. The following are the nearest MTA bus lines to the property:

Q101 – Northern Boulevard and 34th Street

Q102 – 31st Street and 37th Avenue

Q66 – 35th Avenue and 35th Street

Police, Fire, Water, Sanitation, Snow Removal and Road Maintenance:

Water, Sanitation, Snow Removal and Road Maintenance are provided by the City of New York and all charges (except water) are incorporated into City taxes. The Property is located within the 114th Police Precinct located at 34-16 Astoria Boulevard, Astoria, New York 11103. The nearest Fire Department is Ladder 116 located at 37-20 29th Street, Long Island City, New York 11101.

Public Library:

A branch of the Queens Public Library, the Long Island City Branch, is located 37-44 21st Street, Long Island City, New York 11101.

Mailing Address and Postal Services:

The mailing address of the Building will be "37-14 34th Street, Long Island City, New York 11101." The post office servicing the Building is the Plaza Station located at 24-18 Queens Plaza South, Long Island City, New York 11101.

Medical Facilities

- The Mount Sinai Hospital of Queens 25-10 30th Avenue, Long Island City

- Queens Bridge Medical Center 10-29 41st Avenue, Long Island City
- Leaf Medical – Long Island City 10-29 47th Road, Long Island City

Religious Facilities

There are houses of most major denominations in the vicinity of the Building.

After the date of filing acceptance of this Offering Plan to the Department of Law, Sponsor makes no guarantee or representation as to the continued operation of any of the services or amenities disclosed in this section of the Offering Plan.

SCHEDULE A

THE 37-14 34TH STREET CONDOMINIUM

SCHEDULE OF PURCHASE PRICES AND OTHER FINANCIAL DETAILS

FOR FIRST FULL YEAR OF OPERATION

OCTOBER 1, 2020 - SEPTEMBER 30, 2021

Unit	Unit Square Footage (1)	Limited Common Element Square Footage (1)	BR	Bath	Offering Price (2)	Percentage of Common Interest (3)	Percentage of Residential Common Interest (3)	Estimated Common Charges Monthly (4)	Estimated Common Charges Annually (4)	Estimated Real Estate Taxes Monthly (5)	Estimated Real Estate Taxes Annually (5)	Total of Estimated Common Charges and Real Estate Taxes Monthly (6)	Total of Estimated Common Charges and Real Estate Taxes Annually (6)	Estimated Real Estate Taxes With 421a Benefits Monthly (5)	Estimated Real Estate Taxes With 421a Benefits Annually (5)	Total of Estimated Common Charges and Real Estate Taxes With 421a Benefits Monthly (6)	Total of Estimated Common Charges and Real Estate Taxes With 421a Benefits Annually (6)
N2A	435.5	0.0	0	1	$555,000	0.7017%	0.7593%	$472.87	$5,674.42	$668.17	$8,018.00	$1,141.04	$13,692.42	$51.50	$618.00	$524.37	$6,292.42
N2B	437.2	0.0	0	1	$555,000	0.7017%	0.7593%	$472.87	$5,674.42	$668.17	$8,018.00	$1,141.04	$13,692.42	$51.50	$618.00	$524.37	$6,292.42
N2C	678.6	0.0	1	1	$725,000	0.9167%	0.9919%	$617.72	$7,412.70	$872.92	$10,475.00	$1,490.64	$17,887.70	$67.33	$808.00	$685.05	$8,220.70
N2D	961.0	537.8	2	2	$1,185,000	1.4983%	1.6213%	$1,009.70	$12,116.35	$1,426.75	$17,121.00	$2,436.45	$29,237.35	$452.67	$5,432.00	$1,462.37	$17,548.35
N3A	631.8	60.0	1	1	$750,000	0.9483%	1.0261%	$639.02	$7,668.28	$903.00	$10,836.00	$1,542.02	$18,504.28	$69.67	$836.00	$708.69	$8,504.28
N3B	452.5	0.0	0	1	$565,000	0.7144%	0.7730%	$481.40	$5,776.81	$680.25	$8,163.00	$1,161.65	$13,939.81	$52.50	$630.00	$533.90	$6,406.81
N3C	433.2	0.0	0	1	$565,000	0.7144%	0.7730%	$481.40	$5,776.81	$680.25	$8,163.00	$1,161.65	$13,939.81	$52.50	$630.00	$533.90	$6,406.81
N3D	654.3	0.0	1	1	$730,000	0.9230%	0.9988%	$622.02	$7,464.26	$878.92	$10,547.00	$1,500.94	$18,011.26	$67.75	$813.00	$689.77	$8,277.26
N3E	658.3	0.0	1	1	$730,000	0.9230%	0.9988%	$622.02	$7,464.26	$878.92	$10,547.00	$1,500.94	$18,011.26	$67.75	$813.00	$689.77	$8,277.26
N3F	674.5	0.0	1	1	$730,000	0.9230%	0.9988%	$622.02	$7,464.26	$878.92	$10,547.00	$1,500.94	$18,011.26	$67.75	$813.00	$689.77	$8,277.26
N3G	667.5	60.0	1	1	$750,000	0.9483%	1.0261%	$639.02	$7,668.28	$903.00	$10,836.00	$1,542.02	$18,504.28	$69.67	$836.00	$708.69	$8,504.28
N3H	421.8	0.0	0	1	$570,000	0.7207%	0.7798%	$485.64	$5,827.62	$686.25	$8,235.00	$1,171.89	$14,062.62	$52.92	$635.00	$538.56	$6,462.62
N3I	657.2	60.0	1	1	$775,000	0.9799%	1.0603%	$660.32	$7,923.87	$933.08	$11,197.00	$1,593.40	$19,120.87	$72.00	$864.00	$732.32	$8,787.87
N4A	631.8	60.0	1	1	$765,000	0.9672%	1.0466%	$651.79	$7,821.48	$921.00	$11,052.00	$1,572.79	$18,873.48	$71.00	$852.00	$722.79	$8,673.48
N4B	452.5	0.0	0	1	$580,000	0.7333%	0.7935%	$494.17	$5,930.01	$698.33	$8,380.00	$1,192.50	$14,310.01	$53.83	$646.00	$548.00	$6,576.01
N4C	433.2	0.0	0	1	$580,000	0.7333%	0.7935%	$494.17	$5,930.01	$698.33	$8,380.00	$1,192.50	$14,310.01	$53.83	$646.00	$548.00	$6,576.01
N4D	654.3	0.0	1	1	$745,000	0.9420%	1.0193%	$634.79	$7,617.46	$897.00	$10,764.00	$1,531.79	$18,381.46	$69.17	$830.00	$703.96	$8,447.46
N4E	658.3	0.0	1	1	$745,000	0.9420%	1.0193%	$634.79	$7,617.46	$897.00	$10,764.00	$1,531.79	$18,381.46	$69.17	$830.00	$703.96	$8,447.46
N4F	674.5	0.0	1	1	$745,000	0.9420%	1.0193%	$634.79	$7,617.46	$897.00	$10,764.00	$1,531.79	$18,381.46	$69.17	$830.00	$703.96	$8,447.46
N4G	667.5	60.0	1	1	$765,000	0.9672%	1.0466%	$651.79	$7,821.48	$921.00	$11,052.00	$1,572.79	$18,873.48	$71.00	$852.00	$722.79	$8,673.48
N4H	421.8	0.0	0	1	$590,000	0.7460%	0.8072%	$502.70	$6,032.39	$710.33	$8,524.00	$1,213.03	$14,556.39	$54.75	$657.00	$557.45	$6,689.39
N4I	657.2	60.0	1	1	$790,000	0.9988%	1.0808%	$673.09	$8,077.07	$951.08	$11,413.00	$1,624.17	$19,490.07	$73.33	$880.00	$746.42	$8,957.07
N5A	631.8	60.0	1	1	$780,000	0.9862%	1.0672%	$664.62	$7,975.43	$939.17	$11,270.00	$1,603.79	$19,245.43	$72.42	$869.00	$737.04	$8,844.43
N5B	917.8	0.0	2	2	$1,175,000	1.4856%	1.6076%	$1,001.16	$12,013.96	$1,414.67	$16,976.00	$2,415.83	$28,989.96	$440.58	$5,287.00	$1,441.74	$17,300.96
N5C	646.3	0.0	1	1	$750,000	0.9483%	1.0261%	$639.02	$7,668.28	$903.00	$10,836.00	$1,542.02	$18,504.28	$69.67	$836.00	$708.69	$8,504.28
N5D	646.3	0.0	1	1	$750,000	0.9483%	1.0261%	$639.02	$7,668.28	$903.00	$10,836.00	$1,542.02	$18,504.28	$69.67	$836.00	$708.69	$8,504.28
N5E	662.5	0.0	1	1	$750,000	0.9483%	1.0261%	$639.02	$7,668.28	$903.00	$10,836.00	$1,542.02	$18,504.28	$69.67	$836.00	$708.69	$8,504.28
N5F	837.3	60.0	2	1	$1,075,000	1.3592%	1.4708%	$915.97	$10,991.63	$1,294.33	$15,532.00	$2,210.30	$26,523.63	$320.25	$3,843.00	$1,236.22	$14,834.63
N5G	909.2	60.0	2	2	$1,200,000	1.5172%	1.6418%	$1,022.46	$12,269.55	$1,444.75	$17,337.00	$2,467.21	$29,606.55	$470.67	$5,648.00	$1,493.13	$17,917.55
N6A	1,042.0	404.8	2	2	$1,350,000	1.7069%	1.8470%	$1,150.25	$13,803.06	$1,625.33	$19,504.00	$2,775.58	$33,307.06	$651.33	$7,816.00	$1,801.58	$21,619.06
N6B	794.1	128.5	2	1	$1,025,000	1.2960%	1.4024%	$873.37	$10,480.46	$1,234.08	$14,809.00	$2,107.45	$25,289.46	$260.08	$3,121.00	$1,133.45	$13,601.46
N6C	646.3	0.0	1	1	$775,000	0.9799%	1.0603%	$660.32	$7,923.87	$933.08	$11,197.00	$1,593.40	$19,120.87	$72.00	$864.00	$732.32	$8,787.87
N6D	662.5	0.0	1	1	$775,000	0.9799%	1.0603%	$660.32	$7,923.87	$933.08	$11,197.00	$1,593.40	$19,120.87	$72.00	$864.00	$732.32	$8,787.87
N6E	837.3	60.0	2	1	$1,100,000	1.3908%	1.5050%	$937.27	$11,247.21	$1,324.42	$15,893.00	$2,261.69	$27,140.21	$350.33	$4,204.00	$1,287.60	$15,451.21
N6F	909.2	60.0	2	2	$1,250,000	1.5805%	1.7102%	$1,065.06	$12,780.72	$1,505.00	$18,060.00	$2,570.06	$30,840.72	$531.00	$6,372.00	$1,596.06	$19,152.72
N7A	1,042.0	212.7	2	2	$1,350,000	1.7069%	1.8470%	$1,150.25	$13,803.06	$1,625.33	$19,504.00	$2,775.58	$33,307.06	$651.33	$7,816.00	$1,801.58	$21,619.06
N7B	1,435.6	547.0	3	2	$2,000,000	2.5287%	2.7363%	$1,704.08	$20,449.00	$2,407.92	$28,895.00	$4,112.00	$49,344.00	$1,433.83	$17,206.00	$3,137.91	$37,655.00
N7C	837.3	60.0	2	1	$1,125,000	1.4224%	1.5392%	$958.57	$11,502.80	$1,354.50	$16,254.00	$2,313.07	$27,756.80	$380.42	$4,565.00	$1,338.99	$16,067.80
N7D	909.2	60.0	2	2	$1,275,000	1.6121%	1.7444%	$1,086.36	$13,036.30	$1,535.08	$18,421.00	$2,621.44	$31,457.30	$561.08	$6,733.00	$1,647.44	$19,769.30
S2A	435.5	0.0	0	1	$555,000	0.7017%	0.7593%	$472.87	$5,674.42	$668.17	$8,018.00	$1,141.04	$13,692.42	$51.50	$618.00	$524.37	$6,292.42
S2B	437.2	0.0	0	1	$555,000	0.7017%	0.7593%	$472.87	$5,674.42	$668.17	$8,018.00	$1,141.04	$13,692.42	$51.50	$618.00	$524.37	$6,292.42
S2C	679.5	0.0	1	1	$725,000	0.9167%	0.9919%	$617.72	$7,412.70	$872.92	$10,475.00	$1,490.64	$17,887.70	$67.33	$808.00	$685.05	$8,220.70
S2D	967.8	537.8	2	2	$1,250,000	1.5805%	1.7102%	$1,065.06	$12,780.72	$1,505.00	$18,060.00	$2,570.06	$30,840.72	$531.00	$6,372.00	$1,596.06	$19,152.72
S3A	631.8	60.0	1	1	$750,000	0.9483%	1.0261%	$639.02	$7,668.28	$903.00	$10,836.00	$1,542.02	$18,504.28	$69.67	$836.00	$708.69	$8,504.28

SCHEDULE A

THE 37-14 34TH STREET CONDOMINIUM

SCHEDULE OF PURCHASE PRICES AND OTHER FINANCIAL DETAILS

FOR FIRST FULL YEAR OF OPERATION

OCTOBER 1, 2020 - SEPTEMBER 30, 2021

Unit	Unit Square Footage (1)	Limited Common Element Square Footage (1)	BR	Bath	Offering Price (2)	Percentage of Common Interest (3)	Percentage of Residential Common Interest (3)	Estimated Common Charges Monthly (4)	Estimated Common Charges Annually (4)	Estimated Real Estate Taxes Monthly (5)	Estimated Real Estate Taxes Annually (5)	Total of Estimated Common Charges and Real Estate Taxes Monthly (6)	Total of Estimated Common Charges and Real Estate Taxes Annually (6)	Estimated Real Estate Taxes With 421a Benefits Monthly (5)	Estimated Real Estate Taxes With 421a Benefits Annually (5)	Total of Estimated Common Charges and Real Estate Taxes With 421a Benefits Monthly (6)	Total of Estimated Common Charges and Real Estate Taxes With 421a Benefits Annually (6)
S3B	452.6	0.0	0	1	$565,000	0.7144%	0.7730%	$481.40	$5,776.81	$680.25	$8,163.00	$1,161.65	$13,939.81	$52.50	$630.00	$533.90	$6,406.81
S3C	433.2	0.0	0	1	$565,000	0.7144%	0.7730%	$481.40	$5,776.81	$680.25	$8,163.00	$1,161.65	$13,939.81	$52.50	$630.00	$533.90	$6,406.81
S3D	654.3	0.0	1	1	$730,000	0.9230%	0.9988%	$622.02	$7,464.26	$878.92	$10,547.00	$1,500.94	$18,011.26	$67.75	$813.00	$689.77	$8,277.26
S3E	658.3	0.0	1	1	$730,000	0.9230%	0.9988%	$622.02	$7,464.26	$878.92	$10,547.00	$1,500.94	$18,011.26	$67.75	$813.00	$689.77	$8,277.26
S3F	675.1	0.0	1	1	$730,000	0.9230%	0.9988%	$622.02	$7,464.26	$878.92	$10,547.00	$1,500.94	$18,011.26	$67.75	$813.00	$689.77	$8,277.26
S3G	844.1	60.0	2	1	$1,025,000	1.2960%	1.4024%	$873.37	$10,480.46	$1,234.08	$14,809.00	$2,107.45	$25,289.46	$260.08	$3,121.00	$1,133.45	$13,601.46
S3H	909.2	60.0	2	2	$1,175,000	1.4856%	1.6076%	$1,001.16	$12,013.96	$1,414.67	$16,976.00	$2,415.83	$28,989.96	$440.58	$5,287.00	$1,441.74	$17,300.96
S4A	631.8	60.0	1	1	$765,000	0.9672%	1.0466%	$651.79	$7,821.48	$921.00	$11,052.00	$1,572.79	$18,873.48	$71.00	$852.00	$722.79	$8,673.48
S4B	452.6	0.0	0	1	$580,000	0.7333%	0.7935%	$494.17	$5,930.01	$698.33	$8,380.00	$1,192.50	$14,310.01	$53.83	$646.00	$548.00	$6,576.01
S4C	433.2	0.0	0	1	$580,000	0.7333%	0.7935%	$494.17	$5,930.01	$698.33	$8,380.00	$1,192.50	$14,310.01	$53.83	$646.00	$548.00	$6,576.01
S4D	654.3	0.0	1	1	$745,000	0.9420%	1.0193%	$634.79	$7,617.46	$897.00	$10,764.00	$1,531.79	$18,381.46	$69.17	$830.00	$703.96	$8,447.46
S4E	658.3	0.0	1	1	$745,000	0.9420%	1.0193%	$634.79	$7,617.46	$897.00	$10,764.00	$1,531.79	$18,381.46	$69.17	$830.00	$703.96	$8,447.46
S4F	675.1	0.0	1	1	$745,000	0.9420%	1.0193%	$634.79	$7,617.46	$897.00	$10,764.00	$1,531.79	$18,381.46	$69.17	$830.00	$703.96	$8,447.46
S4G	844.1	60.0	2	1	$1,050,000	1.3276%	1.4366%	$894.67	$10,736.04	$1,264.17	$15,170.00	$2,158.84	$25,906.04	$290.17	$3,482.00	$1,184.84	$14,218.04
S4H	909.2	60.0	2	2	$1,100,000	1.3908%	1.5050%	$937.27	$11,247.21	$1,324.42	$15,893.00	$2,261.69	$27,140.21	$350.33	$4,204.00	$1,287.60	$15,451.21
S5A	631.8	60.0	1	1	$780,000	0.9862%	1.0672%	$664.62	$7,975.43	$939.17	$11,270.00	$1,603.79	$19,245.43	$72.42	$869.00	$737.04	$8,844.43
S5B	453.0	0.0	0	1	$590,000	0.7460%	0.8072%	$502.70	$6,032.39	$710.33	$8,524.00	$1,213.03	$14,556.39	$54.75	$657.00	$557.45	$6,689.39
S5C	435.0	0.0	0	1	$590,000	0.7460%	0.8072%	$502.70	$6,032.39	$710.33	$8,524.00	$1,213.03	$14,556.39	$54.75	$657.00	$557.45	$6,689.39
S5D	652.0	0.0	1	1	$760,000	0.9609%	1.0398%	$647.56	$7,770.66	$915.00	$10,980.00	$1,562.56	$18,750.66	$70.58	$847.00	$718.14	$8,617.66
S5E	658.3	0.0	1	1	$760,000	0.9609%	1.0398%	$647.56	$7,770.66	$915.00	$10,980.00	$1,562.56	$18,750.66	$70.58	$847.00	$718.14	$8,617.66
S5F	675.1	0.0	1	1	$760,000	0.9609%	1.0398%	$647.56	$7,770.66	$915.00	$10,980.00	$1,562.56	$18,750.66	$70.58	$847.00	$718.14	$8,617.66
S5G	844.1	60.0	2	1	$1,075,000	1.3592%	1.4708%	$915.97	$10,991.63	$1,294.33	$15,532.00	$2,210.30	$26,523.63	$320.25	$3,843.00	$1,236.22	$14,834.63
S5H	909.2	60.0	2	2	$1,125,000	1.4224%	1.5392%	$958.57	$11,502.80	$1,354.50	$16,254.00	$2,313.07	$27,756.80	$380.42	$4,565.00	$1,338.99	$16,067.80
S6A	1,042.0	404.8	2	2	$1,300,000	1.6437%	1.7786%	$1,107.66	$13,291.89	$1,565.17	$18,782.00	$2,672.83	$32,073.89	$591.17	$7,094.00	$1,698.83	$20,385.89
S6B	794.1	128.5	2	1	$1,025,000	1.2960%	1.3988%	$871.13	$10,453.55	$1,230.92	$14,771.00	$2,102.05	$25,224.55	$260.08	$3,121.00	$1,131.21	$13,574.55
S6C	646.3	0.0	1	1	$785,000	0.9925%	1.0740%	$668.85	$8,026.25	$945.17	$11,342.00	$1,614.02	$19,368.25	$72.92	$875.00	$741.77	$8,901.25
S6D	663.1	0.0	1	1	$785,000	0.9925%	1.0740%	$668.85	$8,026.25	$945.17	$11,342.00	$1,614.02	$19,368.25	$72.92	$875.00	$741.77	$8,901.25
S6E	844.1	60.0	2	1	$1,100,000	1.3908%	1.5050%	$937.27	$11,247.21	$1,324.42	$15,893.00	$2,261.69	$27,140.21	$350.33	$4,204.00	$1,287.60	$15,451.21
S6F	909.0	60.0	2	2	$1,200,000	1.5172%	1.6418%	$1,022.46	$12,269.55	$1,444.75	$17,337.00	$2,467.21	$29,606.55	$470.67	$5,648.00	$1,493.13	$17,917.55
S7A	1,042.0	212.7	2	2	$1,350,000	1.7069%	1.8470%	$1,150.25	$13,803.06	$1,625.33	$19,504.00	$2,775.58	$33,307.06	$651.33	$7,816.00	$1,801.58	$21,619.06
S7B	1,443.2	547.0	3	2	$2,000,000	2.5287%	2.7363%	$1,704.08	$20,449.00	$2,407.92	$28,895.00	$4,112.00	$49,344.00	$1,433.83	$17,206.00	$3,137.91	$37,655.00
S7C	844.1	60.0	2	1	$1,125,000	1.4224%	1.5392%	$958.57	$11,502.80	$1,354.50	$16,254.00	$2,313.07	$27,756.80	$380.42	$4,565.00	$1,338.99	$16,067.80
S7D	909.2	60.0	2	2	$1,275,000	1.6121%	1.7444%	$1,086.36	$13,036.30	$1,535.08	$18,421.00	$2,621.44	$31,457.30	$561.08	$6,733.00	$1,647.44	$19,769.30
P1	153.0				$80,000	0.1011%	0.1095%	$68.19	$818.32	$96.42	$1,157.00	$164.61	$1,975.32	$7.42	$89.00	$75.61	$907.32
P2	153.0				$80,000	0.1011%	0.1095%	$68.19	$818.32	$96.42	$1,157.00	$164.61	$1,975.32	$7.42	$89.00	$75.61	$907.32
P3	153.0				$80,000	0.1011%	0.1095%	$68.19	$818.32	$96.42	$1,157.00	$164.61	$1,975.32	$7.42	$89.00	$75.61	$907.32
P4 (ADA)	153.0				$80,000	0.1011%	0.1095%	$68.19	$818.32	$96.42	$1,157.00	$164.61	$1,975.32	$7.42	$89.00	$75.61	$907.32
P5	153.0				$80,000	0.1011%	0.1095%	$68.19	$818.32	$96.42	$1,157.00	$164.61	$1,975.32	$7.42	$89.00	$75.61	$907.32
P6	153.0				$80,000	0.1011%	0.1095%	$68.19	$818.32	$96.42	$1,157.00	$164.61	$1,975.32	$7.42	$89.00	$75.61	$907.32
P7	153.0				$80,000	0.1011%	0.1095%	$68.19	$818.32	$96.42	$1,157.00	$164.61	$1,975.32	$7.42	$89.00	$75.61	$907.32
P8 (A)	139.0				$80,000	0.1011%	0.1095%	$68.19	$818.32	$96.42	$1,157.00	$164.61	$1,975.32	$7.42	$89.00	$75.61	$907.32
P9 (A)	139.0				$80,000	0.1011%	0.1095%	$68.19	$818.32	$96.42	$1,157.00	$164.61	$1,975.32	$7.42	$89.00	$75.61	$907.32
P10 (A)	139.0				$80,000	0.1011%	0.1095%	$68.19	$818.32	$96.42	$1,157.00	$164.61	$1,975.32	$7.42	$89.00	$75.61	$907.32
P11 (A)	139.0				$80,000	0.1011%	0.1095%	$68.19	$818.32	$96.42	$1,157.00	$164.61	$1,975.32	$7.42	$89.00	$75.61	$907.32

SCHEDULE A

THE 37-14 34TH STREET CONDOMINIUM

SCHEDULE OF PURCHASE PRICES AND OTHER FINANCIAL DETAILS

FOR FIRST FULL YEAR OF OPERATION

OCTOBER 1, 2020 - SEPTEMBER 30, 2021

Unit	Unit Square Footage (1)	Limited Common Element Square Footage (1)	BR Bath	Offering Price (2)	Percentage of Common Interest (3)	Percentage of Residential Common Interest (3)	Estimated Common Charges Monthly (4)	Estimated Common Charges Annually (4)	Estimated Real Estate Taxes Monthly (5)	Estimated Real Estate Taxes Annually (5)	Total of Estimated Common Charges and Real Estate Taxes Monthly (6)	Total of Estimated Common Charges and Real Estate Taxes Annually (6)	Estimated Real Estate Taxes With 421a Benefits Monthly (5)	Estimated Real Estate Taxes With 421a Benefits Annually (5)	Total of Estimated Common Charges and Real Estate Taxes With 421a Benefits Monthly (6)	Total of Estimated Common Charges and Real Estate Taxes With 421a Benefits Annually (6)
P12 (A)	139.0			$80,000	0.1011%	0.1095%	$68.19	$818.32	$96.42	$1,157.00	$164.61	$1,975.32	$7.42	$89.00	$75.61	$907.32
P13 (A)	139.0			$80,000	0.1011%	0.1095%	$68.19	$818.32	$96.42	$1,157.00	$164.61	$1,975.32	$7.42	$89.00	$75.61	$907.32
P14 (A)	139.0			$80,000	0.1011%	0.1095%	$68.19	$818.32	$96.42	$1,157.00	$164.61	$1,975.32	$7.42	$89.00	$75.61	$907.32
P15 (A)	139.0			$80,000	0.1011%	0.1095%	$68.19	$818.32	$96.42	$1,157.00	$164.61	$1,975.32	$7.42	$89.00	$75.61	$907.32
P16 (A)	139.0			$80,000	0.1011%	0.1095%	$68.19	$818.32	$96.42	$1,157.00	$164.61	$1,975.32	$7.42	$89.00	$75.61	$907.32
P17 (A)	139.0			$80,000	0.1011%	0.1095%	$68.19	$818.32	$96.42	$1,157.00	$164.61	$1,975.32	$7.42	$89.00	$75.61	$907.32
P18 (A)	139.0			$80,000	0.1011%	0.1095%	$68.19	$818.32	$96.42	$1,157.00	$164.61	$1,975.32	$7.42	$89.00	$75.61	$907.32
P19 (A)	139.0			$80,000	0.1011%	0.1095%	$68.19	$818.32	$96.42	$1,157.00	$164.61	$1,975.32	$7.42	$89.00	$75.61	$907.32
P20 (A)	139.0			$80,000	0.1011%	0.1095%	$68.19	$818.32	$96.42	$1,157.00	$164.61	$1,975.32	$7.42	$89.00	$75.61	$907.32
P21 (A)	139.0			$80,000	0.1011%	0.1095%	$68.19	$818.32	$96.42	$1,157.00	$164.61	$1,975.32	$7.42	$89.00	$75.61	$907.32
P22 (A)	139.0			$80,000	0.1011%	0.1095%	$68.19	$818.32	$96.42	$1,157.00	$164.61	$1,975.32	$7.42	$89.00	$75.61	$907.32
P23 (A)	139.0			$80,000	0.1011%	0.1095%	$68.19	$818.32	$96.42	$1,157.00	$164.61	$1,975.32	$7.42	$89.00	$75.61	$907.32
P24 (A)	139.0			$80,000	0.1011%	0.1095%	$68.19	$818.32	$96.42	$1,157.00	$164.61	$1,975.32	$7.42	$89.00	$75.61	$907.32
P25 (A)	139.0			$80,000	0.1011%	0.1095%	$68.19	$818.32	$96.42	$1,157.00	$164.61	$1,975.32	$7.42	$89.00	$75.61	$907.32
P26 (A)	139.0			$80,000	0.1011%	0.1095%	$68.19	$818.32	$96.42	$1,157.00	$164.61	$1,975.32	$7.42	$89.00	$75.61	$907.32
P27 (A)	139.0			$80,000	0.1011%	0.1095%	$68.19	$818.32	$96.42	$1,157.00	$164.61	$1,975.32	$7.42	$89.00	$75.61	$907.32
P28 (A)	139.0			$80,000	0.1011%	0.1095%	$68.19	$818.32	$96.42	$1,157.00	$164.61	$1,975.32	$7.42	$89.00	$75.61	$907.32
P29 (A)	139.0			$80,000	0.1011%	0.1095%	$68.19	$818.32	$96.42	$1,157.00	$164.61	$1,975.32	$7.42	$89.00	$75.61	$907.32
P30 (A)	139.0			$80,000	0.1011%	0.1095%	$68.19	$818.32	$96.42	$1,157.00	$164.61	$1,975.32	$7.42	$89.00	$75.61	$907.32
P31 (A)	139.0			$80,000	0.1011%	0.1095%	$68.19	$818.32	$96.42	$1,157.00	$164.61	$1,975.32	$7.42	$89.00	$75.61	$907.32
P32 (A)	139.0			$80,000	0.1011%	0.1095%	$68.19	$818.32	$96.42	$1,157.00	$164.61	$1,975.32	$7.42	$89.00	$75.61	$907.32
P33 (A)	139.0			$80,000	0.1011%	0.1095%	$68.19	$818.32	$96.42	$1,157.00	$164.61	$1,975.32	$7.42	$89.00	$75.61	$907.32
P34 (A)	139.0			$80,000	0.1011%	0.1095%	$68.19	$818.32	$96.42	$1,157.00	$164.61	$1,975.32	$7.42	$89.00	$75.61	$907.32
P35 (A)	139.0			$80,000	0.1011%	0.1095%	$68.19	$818.32	$96.42	$1,157.00	$164.61	$1,975.32	$7.42	$89.00	$75.61	$907.32
P36 (A)	139.0			$80,000	0.1011%	0.1095%	$68.19	$818.32	$96.42	$1,157.00	$164.61	$1,975.32	$7.42	$89.00	$75.61	$907.32
P37 (A)	139.0			$80,000	0.1011%	0.1095%	$68.19	$818.32	$96.42	$1,157.00	$164.61	$1,975.32	$7.42	$89.00	$75.61	$907.32
P38 (A)	139.0			$80,000	0.1011%	0.1095%	$68.19	$818.32	$96.42	$1,157.00	$164.61	$1,975.32	$7.42	$89.00	$75.61	$907.32
P39 (A)	139.0			$80,000	0.1011%	0.1095%	$68.19	$818.32	$96.42	$1,157.00	$164.61	$1,975.32	$7.42	$89.00	$75.61	$907.32
P40 (A)	139.0			$80,000	0.1011%	0.1095%	$68.19	$818.32	$96.42	$1,157.00	$164.61	$1,975.32	$7.42	$89.00	$75.61	$907.32
P41 (A)	139.0			$80,000	0.1011%	0.1095%	$68.19	$818.32	$96.42	$1,157.00	$164.61	$1,975.32	$7.42	$89.00	$75.61	$907.32
P42	243.0			$80,000	0.1011%	0.1095%	$68.19	$818.32	$96.42	$1,157.00	$164.61	$1,975.32	$7.42	$89.00	$75.61	$907.32
P43 (ADA)	243.0			$80,000	0.1011%	0.1095%	$68.19	$818.32	$96.42	$1,157.00	$164.61	$1,975.32	$7.42	$89.00	$75.61	$907.32
NC1	315.0			$120,000	0.1517%	0.1642%	$102.26	$1,227.10	$144.50	$1,734.00	$246.76	$2,961.10	$11.17	$134.00	$113.43	$1,361.10
NC2	382.0			$130,000	0.1644%	0.1779%	$110.79	$1,329.49	$156.58	$1,879.00	$267.37	$3,208.49	$12.08	$145.00	$122.87	$1,474.49
NC3	277.0			$120,000	0.1517%	0.1642%	$102.26	$1,227.10	$144.50	$1,734.00	$246.76	$2,961.10	$11.17	$134.00	$113.43	$1,361.10
SC1	315.0			$120,000	0.1517%	0.1642%	$102.26	$1,227.10	$144.50	$1,734.00	$246.76	$2,961.10	$11.17	$134.00	$113.43	$1,361.10
SC2	382.0			$130,000	0.1644%	0.1779%	$110.79	$1,329.49	$156.58	$1,879.00	$267.37	$3,208.49	$12.08	$145.00	$122.87	$1,474.49
SC3	277.0			$120,000	0.1517%	0.1642%	$102.26	$1,227.10	$144.50	$1,734.00	$246.76	$2,961.10	$11.17	$134.00	$113.43	$1,361.10
S1	18.0			$25,000	0.0316%	0.0342%	$21.30	$255.58	$30.17	$362.00	$51.47	$617.58	$2.33	$28.00	$23.63	$283.58
S2	20.0			$25,000	0.0316%	0.0342%	$21.30	$255.58	$30.17	$362.00	$51.47	$617.58	$2.33	$28.00	$23.63	$283.58
S3	14.0			$20,000	0.0253%	0.0274%	$17.06	$204.77	$24.17	$290.00	$41.23	$494.77	$1.83	$22.00	$18.89	$226.77
S4	14.0			$20,000	0.0253%	0.0274%	$17.06	$204.77	$24.17	$290.00	$41.23	$494.77	$1.83	$22.00	$18.89	$226.77
S5	14.0			$20,000	0.0253%	0.0274%	$17.06	$204.77	$24.17	$290.00	$41.23	$494.77	$1.83	$22.00	$18.89	$226.77
S6	14.0			$20,000	0.0253%	0.0274%	$17.06	$204.77	$24.17	$290.00	$41.23	$494.77	$1.83	$22.00	$18.89	$226.77

SCHEDULE A

THE 37-14 34TH STREET CONDOMINIUM

SCHEDULE OF PURCHASE PRICES AND OTHER FINANCIAL DETAILS

FOR FIRST FULL YEAR OF OPERATION

OCTOBER 1, 2020 - SEPTEMBER 30, 2021

Unit	Unit Square Footage (1)	Limited Common Element Square Footage (1)	BR	Bath	Offering Price (2)	Percentage of Common Interest (3)	Percentage of Residential Common Interest (3)	Estimated Common Charges Monthly (4)	Estimated Common Charges Annually (4)	Estimated Real Estate Taxes Monthly (5)	Estimated Real Estate Taxes Annually (5)	Total of Estimated Common Charges and Real Estate Taxes Monthly (6)	Total of Estimated Common Charges and Real Estate Taxes Annually (6)	Estimated Real Estate Taxes With 421a Benefits Monthly (5)	Estimated Real Estate Taxes With 421a Benefits Annually (5)	Total of Estimated Common Charges and Real Estate Taxes With 421a Benefits Monthly (6)	Total of Estimated Common Charges and Real Estate Taxes With 421a Benefits Annually (6)
S7	14.0				$20,000	0.0253%	0.0274%	$17.06	$204.77	$24.17	$290.00	$41.23	$494.77	$1.83	$22.00	$18.89	$226.77
S8	14.0				$20,000	0.0253%	0.0274%	$17.06	$204.77	$24.17	$290.00	$41.23	$494.77	$1.83	$22.00	$18.89	$226.77
S9	14.0				$20,000	0.0253%	0.0274%	$17.06	$204.77	$24.17	$290.00	$41.23	$494.77	$1.83	$22.00	$18.89	$226.77
S10	14.0				$20,000	0.0253%	0.0274%	$17.06	$204.77	$24.17	$290.00	$41.23	$494.77	$1.83	$22.00	$18.89	$226.77
S11	14.0				$20,000	0.0253%	0.0274%	$17.06	$204.77	$24.17	$290.00	$41.23	$494.77	$1.83	$22.00	$18.89	$226.77
S12	14.0				$20,000	0.0253%	0.0274%	$17.06	$204.77	$24.17	$290.00	$41.23	$494.77	$1.83	$22.00	$18.89	$226.77
S13	14.0				$20,000	0.0253%	0.0274%	$17.06	$204.77	$24.17	$290.00	$41.23	$494.77	$1.83	$22.00	$18.89	$226.77
S14	13.3				$20,000	0.0253%	0.0274%	$17.06	$204.77	$24.17	$290.00	$41.23	$494.77	$1.83	$22.00	$18.89	$226.77
S15	14.7				$20,000	0.0253%	0.0274%	$17.06	$204.77	$24.17	$290.00	$41.23	$494.77	$1.83	$22.00	$18.89	$226.77
S16	14.0				$20,000	0.0253%	0.0274%	$17.06	$204.77	$24.17	$290.00	$41.23	$494.77	$1.83	$22.00	$18.89	$226.77
S17	14.0				$20,000	0.0253%	0.0274%	$17.06	$204.77	$24.17	$290.00	$41.23	$494.77	$1.83	$22.00	$18.89	$226.77
S18	14.0				$20,000	0.0253%	0.0274%	$17.06	$204.77	$24.17	$290.00	$41.23	$494.77	$1.83	$22.00	$18.89	$226.77
S19	14.0				$20,000	0.0253%	0.0274%	$17.06	$204.77	$24.17	$290.00	$41.23	$494.77	$1.83	$22.00	$18.89	$226.77
S20	20.0				$25,000	0.0316%	0.0342%	$21.30	$255.58	$30.17	$362.00	$51.47	$617.58	$2.33	$28.00	$23.63	$283.58
S21	16.7				$22,000	0.0278%	0.0301%	$18.75	$224.94	$26.50	$318.00	$45.25	$542.94	$2.00	$24.00	$20.75	$248.94
S22	14.0				$20,000	0.0253%	0.0274%	$17.06	$204.77	$24.17	$290.00	$41.23	$494.77	$1.83	$22.00	$18.89	$226.77
S23	14.0				$20,000	0.0253%	0.0274%	$17.06	$204.77	$24.17	$290.00	$41.23	$494.77	$1.83	$22.00	$18.89	$226.77
S24	14.0				$20,000	0.0253%	0.0274%	$17.06	$204.77	$24.17	$290.00	$41.23	$494.77	$1.83	$22.00	$18.89	$226.77
S25	14.0				$20,000	0.0253%	0.0274%	$17.06	$204.77	$24.17	$290.00	$41.23	$494.77	$1.83	$22.00	$18.89	$226.77
S26	14.0				$20,000	0.0253%	0.0274%	$17.06	$204.77	$24.17	$290.00	$41.23	$494.77	$1.83	$22.00	$18.89	$226.77
S27	13.8				$20,000	0.0253%	0.0274%	$17.06	$204.77	$24.17	$290.00	$41.23	$494.77	$1.83	$22.00	$18.89	$226.77
S28	17.0				$22,000	0.0278%	0.0301%	$18.75	$224.94	$26.50	$318.00	$45.25	$542.94	$2.00	$24.00	$20.75	$248.94
S29	14.0				$20,000	0.0253%	0.0274%	$17.06	$204.77	$24.17	$290.00	$41.23	$494.77	$1.83	$22.00	$18.89	$226.77
S30	14.0				$20,000	0.0253%	0.0274%	$17.06	$204.77	$24.17	$290.00	$41.23	$494.77	$1.83	$22.00	$18.89	$226.77
S31	14.0				$20,000	0.0253%	0.0274%	$17.06	$204.77	$24.17	$290.00	$41.23	$494.77	$1.83	$22.00	$18.89	$226.77
S32	14.0				$20,000	0.0253%	0.0274%	$17.06	$204.77	$24.17	$290.00	$41.23	$494.77	$1.83	$22.00	$18.89	$226.77
S33	14.0				$20,000	0.0253%	0.0274%	$17.06	$204.77	$24.17	$290.00	$41.23	$494.77	$1.83	$22.00	$18.89	$226.77
S34	15.0				$20,000	0.0253%	0.0274%	$17.06	$204.77	$24.17	$290.00	$41.23	$494.77	$1.83	$22.00	$18.89	$226.77
S35	14.0				$20,000	0.0253%	0.0274%	$17.06	$204.77	$24.17	$290.00	$41.23	$494.77	$1.83	$22.00	$18.89	$226.77
S36	14.0				$20,000	0.0253%	0.0274%	$17.06	$204.77	$24.17	$290.00	$41.23	$494.77	$1.83	$22.00	$18.89	$226.77
S37	14.0				$20,000	0.0253%	0.0274%	$17.06	$204.77	$24.17	$290.00	$41.23	$494.77	$1.83	$22.00	$18.89	$226.77
S38	14.0				$20,000	0.0253%	0.0274%	$17.06	$204.77	$24.17	$290.00	$41.23	$494.77	$1.83	$22.00	$18.89	$226.77
S39	14.0				$20,000	0.0253%	0.0274%	$17.06	$204.77	$24.17	$290.00	$41.23	$494.77	$1.83	$22.00	$18.89	$226.77
S40	14.0				$20,000	0.0253%	0.0274%	$17.06	$204.77	$24.17	$290.00	$41.23	$494.77	$1.83	$22.00	$18.89	$226.77
S41	20.0				$25,000	0.0316%	0.0342%	$21.30	$255.58	$30.17	$362.00	$51.47	$617.58	$2.33	$28.00	$23.63	$283.58
S42	16.7				$22,000	0.0278%	0.0301%	$18.75	$224.94	$26.50	$318.00	$45.25	$542.94	$2.00	$24.00	$20.75	$248.94
Residential Units Subtotal	**63,664.2**	**5,221.6**			**$73,091,000**	**92.4138%**	**100.0000%**	**$62,276.65**	**$747,322.98**	**$88,005.37**	**$1,055,963.00**	**$150,282.02**	**$1,803,285.98**	**$17,470.02**	**$209,640.00**	**$79,746.67**	**$956,962.98**
Commercial Unit	13,104.0	0.0	0	2	$6,000,000	7.5862%	100.0000%	$2,628.35	$31,540.16	$7,223.75	$86,685.00	$9,852.10	$118,225.16	$6,249.75	$74,997.00	$8,878.10	$8,878.10
Commercial Unit Subtotal	**13,104.0**	**0.0**	**0**	**0**	**$6,000,000**	**7.5862%**	**100.0000%**	**$2,628.35**	**$31,540.16**	**$7,223.75**	**$86,685.00**	**$9,852.10**	**$118,225.16**	**$6,249.75**	**$74,997.00**	**$8,878.10**	**$8,878.10**
TOTAL	**76,768.2**	**5,221.6**			**$79,091,000**	**100.0000%**		**$64,905.00**	**$778,863.14**	**$95,229.12**	**$1,142,648.00**	**$160,134.12**	**$1,921,511.14**	**$23,719.77**	**$284,637.00**	**$88,624.77**	**$965,841.08**

Limited Common Elements include balconies, terraces, and the rear yard. Limited Common Elements and cellar space are considered uninhabitable space and may not be legally used as a bedroom or living room and to do so may result in a building code violation being issued for the Building. No structures of any kind may be erected on these Limited Common Elements without the express written permission of the Board of Managers, except for temporary structures.

NOTES TO SCHEDULE A

1. Floor Plans depicting layouts of Units in this Schedule A appear in Part II of the Offering Plan. Purchasers should note that the square footage of each Unit, as reflected in Schedule A, the Floor Plans set forth in Part II of the Offering Plan, and in Exhibit B to the Declaration set forth in Part II of this Offering Plan are approximate and are within reasonable tolerances. Each Residential Unit is measured horizontally from the exterior side of exterior walls (perimeter columns and mechanical pipes, ducts and shafts are not deducted) to the midpoint of the interior walls and partitions separating one Unit from another Unit, or separating a Unit from public corridors, and other mechanical equipment spaces or any Common Elements or Limited Common Elements. Notwithstanding the foregoing, any Common Elements located within this described form of measurement shall not be considered part of such Unit. Each Unit will be measured vertically from the top of the floor slab below (located under the finished flooring and sub-floor materials) to the underside of the floor slab above. Dimensions listed on Schedule A are based on this method of measurement; since the area calculations are not based upon measurements from interior surfaces of interior walls, the usable floor area of each Unit is significantly less than the area listed in Schedule A. Floor area may include columns, mechanical pipes shafts, shaftways chases, chaseways and conduits which may be incorporated behind protruding walls or may be separately enclosed as freestanding columns thereby reducing the available floor area. Each Unit also includes the interior doors and walls and all plumbing, gas and electrical fixtures, lines, conduits and equipment such as refrigerators, dishwashers, panel boxes, ranges and other appliances, as may be affixed, attached or appurtenant to said Unit, not including the Building heating equipment and system, plumbing, gas and electrical fixtures and equipment as used in the preceding sentence include exposed and unexposed (to the extent solely serving or benefiting the Unit) gas and water pipes attached to the fixtures, appliances and equipment fixtures, appliances and equipment, and appliances and any special equipment, fixtures or facilities affixed, attached, or appurtenant to the Unit.

Limited Common Elements are Common Elements existing for the sole use and enjoyment of certain Unit Owners to the exclusion of all other Unit Owners. Limited Common Elements include but are not limited to any facilities (pipes, shut-off valves, wires, lines, conduits) that exclusively serve a Unit that are located behind its boundary walls or within its boundary walls but not readily accessible without damage to such boundary walls, balconies, terraces, or yards that are allocated for the exclusive use of an appurtenant Unit, as set forth in the Floor Plans.

Each Unit Owner of a Unit to which a Limited Common Element is appurtenant shall be responsible for the cost and performance of all painting, decorating and non-structural ordinary maintenance, repairs, cleaning and replacements to such Limited Common Element, including pipes, wires, and conduits exclusively servicing the Unit. However, any structural or non-ordinary repairs or replacements to a Limited Common Element shall be made by the Board of Managers, and the cost and expense thereof shall be charged to all Unit Owners as a Common Expense unless the need for such repair or replacement was caused by the wrongful or negligent act or omission of a Unit Owner or their tenants, guests, or invitees whereby the cost shall be charged to such Unit Owner. The Board of Managers shall have the right of access to, in, and through these areas for

the purpose of doing building maintenance inspections. No structures of any kind may be erected on Limited Common Elements without the express written permission of the Board of Managers, except for temporary structures. Notwithstanding anything herein to the contrary, a Unit Owner who wishes to paint, decorate or make any other changes to a Limited Common Element appurtenant to their Unit, and which change deviates from the Limited Common Element as it was originally delivered by Sponsor, must first obtain express written permission from the Board of Managers; for as long as Sponsor owns at least one Unit, a Unit Owner must also obtain express written permission from the Sponsor.

Limited Common Elements and any cellar spaces are considered uninhabitable space and may not be legally used as a bedroom or living room and to do so may result in a building code violation being issued for the Building. Any cellar space has less light and air than ordinary living space and is more susceptible to dampness. Refer to Schedule A for the amount of Limited Common Elements available to each Unit Owner.

2. The Purchase Prices of Units may be negotiated by Sponsor and therefore, may be changed. No such change will be made other than pursuant to a duly filed amendment to the Offering Plan filed in advance of any such change, except that Sponsor reserves the right to decrease Purchase Prices, without filing an amendment to the Offering Plan at any time during the offering period, if such a decrease in the Purchase Price does not constitute a general offering or an advertised price, but is rather the result of an individually negotiated transaction. See "Changes in Prices and Units" and "Unit Closing Costs and Adjustments" in Part I of the Offering Plan, for a more detailed description of purchase prices and closing costs.

Sponsor is transferring its statutory obligation, to pay New York City Real Property Transfer Taxes and New York State Real Estate Transfer Taxes, to Purchaser. Purchasers will be required to pay all transfer taxes due at Closing and comply with the requirements of the New York State Department of Taxation and Finance. Purchaser shall pay the Real Estate Transfer Tax due to the State of New York (the so-called "deed stamps" and, if applicable, the so-called "mansion tax"), the Real Property Transfer Tax due to the City of New York and any other real property transfer tax due to the City or State of New York. Purchaser agrees to indemnify and hold Sponsor harmless from and against any and all liabilities and expenses (including, without limitation, reasonable legal fees and disbursements) incurred by Sponsor by reason of the non-payment by Purchaser of any of the taxes Purchaser is obligated to pay hereunder in connection with the purchase of the Unit. Purchaser's obligations to pay the taxes and to indemnify Sponsor as shall survive the closing of title.

Purchasers shall be responsible for the payment at closing of all New York City Real Property Transfer Tax and New York State Real Estate Transfer Tax. Transfer taxes are computed using the purchase price for units purchased and fees paid by Purchaser for Sponsor's attorney (the "Consideration"). The New York City Real Property Transfer Tax (the "RPT") for the purchase of a single residential unit is currently one percent (1%) of the Consideration if such Consideration is $500,000.00 or less, and 1.425% if such Consideration is over $500,000.00. The New York State Real Estate Transfer Tax (the "NYS Tax") for the purchase of a single residential unit under $3,000,000 is currently $2.00 for every $500.00 or part thereof (.4%) of the Consideration. The New York State Real Estate Transfer Tax (the "NYS Tax") for the purchase of a single residential

unit over $3,000,000 is currently $3.25 for every $500.00 or part thereof (.65%) of the Consideration. For purposes of calculating the taxes payable, the amounts of such taxes will be included in the Consideration subject to such tax. In order to compute the transfer taxes payable:

(i) Add the rates for RPT and NYS Tax. The result will be "Total Tax Rate"
(ii) Divide Consideration by 1 minus Total Tax Rate. The result will be "Total Consideration"
(iii) To compute RPT due, multiply Total Consideration by the RPT rate
(iv) To compute NYS Tax due, multiply Total Consideration by NYS Tax rate

3. The respective Common Interest of each Unit in the Common Elements, in accordance with the provisions of §339-i(1)(iv) of the Condominium Act, is based upon floor space, subject to the location of such space and additional factors of relative value to other space in the Condominium, as well as, the uniqueness of the Unit. The Common Interest is the proportionate undivided interest, expressed as a numerical percentage, in the Common Elements appertaining to each Unit.

4. The projected monthly Common Charges provide for the maintenance of the Property outlined in Schedule B. The actual first year of operation may be earlier or later than the projected annual period. In addition to these estimated charges, each Unit Owner will be responsible for paying the following charges pertaining to their Unit:

(i) mortgage debt payments under any loan or loans obtained to finance the acquisition of a Unit;

(ii) each Unit Owner shall be responsible for paying for the costs of separately sub-metered utilities for their Unit. Commonly metered utilities will be paid by the Board of Managers as a Common Expense, and the costs allocated among the Unit Owners as Common Charges; See "Budget for Individual Energy Costs Schedule B-1" in Part I of the Offering Plan for a more detailed description of the separately sub-metered utilities supplied to the Unit.

(iii) the cost of interior repairs to, and the maintenance, painting and decoration of, the Unit (including, without limitation, the equipment and appliances contained therein); and

(iv) the cost of insurance that the Unit Owner covering (a) furniture, belongings, equipment and other personal property and (b) The Unit Owner's liability to others for personal injury or property damage as a result of occurrences in the Unit. Common Expenses are allocated only among the Unit Owners in accordance with their Common Interest.

5. Upon substantial completion of construction, the Property will be classified by the New York City Department of Finance as a Tax Class 2 and 4 property. The policy of the New York City Department of Finance is to apportion each Unit's real estate taxes based on its Common

Interest, in relation to the assessed value of the entire property. However, Sponsor makes no representation that the New York City Department of Finance will actually apportion the real estate taxes for each Unit based on Common Interest.

Any statements regarding property taxes as it relates to this Building has been ascertained from the Property Tax Projection Letter set forth subsequently in Part I of this Offering Plan supplied by Metropolitan Realty Exemptions, Inc., 381 South 5th Street, Brooklyn, NY 11211 ("Property Tax Professional"). Post-construction real estate tax estimates were made by Property Tax Professional. Sponsor and Sponsor's counsel have relied wholly on the Property Tax Projection Letter by Property Tax Professional to provide prospective purchasers the information related to the property taxes for the Building set forth herein; Sponsor and Sponsor's counsel are not property tax experts, have not independently verified the Property Tax Projection Letter, and make no judgment as to its accuracy. Therefore, Purchasers are strongly urged to review the Property Tax Projection Letter provided by Property Tax Professional thoroughly and to consult with their own tax counsel or expert regarding same. See the Property Tax Projection Letter dated August 27, 2019, set forth at the end of the section "Real Estate Taxes". The Property Tax Projection Letter provides, in part, that upon conversion to a condominium, the Residential Units will be designated Tax Class 2 and the Commercial Units will be designated Tax Class 4. The 2017/2018 tax rate is 12.719% for Tax Class 2 and 10.514% for Tax Class 4.

Estimated Residential Assessed Value without 421-a:	$8,372,685
Estimated Residential Tax Liability without 421-a:	$1,055,963
Estimated Residential Assessed Value with 421-a:	$1,662,383
Estimated Residential Tax Liability with 421-a:	$209,640
Estimated Commercial Assessed Value without ICAP:	$687,320
Estimated Commercial Tax Liability without ICAP:	$86,685
Estimated Commercial Assessed Value with ICAP:	$594,646
Estimated Commercial Tax Liability with ICAP:	$74,997

Sponsor has submitted an application to the New York City Department of Housing Preservation and Development ("HPD") and obtained a 421-a Preliminary Certificate of Eligibility for the Property on April 28, 2016, which will entitle Sponsor to 421-a benefits for a period of three (3) years after commencement of construction. Upon the issuance of a TCO or a final CO for the building, Sponsor shall submit an application to HPD for a Final Certificate of Eligibility. Some requirements to obtain a 421-a tax exemption include: the use of Energy Star appliances, water heaters, and boilers, Units cannot be used as a hotel or for Single Room Occupancy purposes, no other exemption benefits are claimed, buildings with more than 50 Units must pay prevailing wages, an application for a Final Certificate of Eligibility must be submitted within 180 days of completion, a statement from an architect regarding the date construction was completed, a statement from a CPA as to the development cost, a copy of the Plan, proof of registration with HPD, and HPD fees. Sponsor represents that it will use reasonable efforts to obtain 421-a benefits following completion of construction. Sponsor will keep all records required by HPD to obtain a Final Certificate of Eligibility for post-construction 421-a benefits, and will make said records available to HPD whenever reasonably requested to do so. Sponsor will make all documents

related to 421-a benefits available to the Condominium upon request, for inspection and copying for the duration of the 421-a benefits.

After completion of construction and pending issuance of a 421-a Final Certificate of Eligibility, any increase in assessment of the Property over the "prior assessed valuation" (the assessed valuation in effect during the tax year preceding the commencement of construction), shall remain exempt for fifteen (15) years, other than assessments for local improvements. The schedule for fifteen (15) year post-construction partial 421-a real estate tax exemption is as follows: one hundred percent (100%) exemption on any increase in the assessed value of the Property over the "prior assessed value" for years one (1) through eleven (11); eighty percent (80%) exemption in year twelve (12); sixty percent (60%) exemption in year thirteen (13); forty percent (40%) exemption in year fourteen (14); and twenty percent (20%) exemption in year fifteen (15), with full real estate taxes due and payable commencing with the sixteenth (16th) year. The exemption on increases to assessed value is subject to a limit ("AV Cap"). For the 2020/2021 tax year, the AV Cap is $92,675, and will increase 3%, compounded annually.

Notwithstanding the disclosures set forth in the Plan pertaining to Sponsor's application for 421-a Benefits for the Building, Sponsor makes no representation or warranty that the Building will receive 421-a benefits after completion of construction, and no representation or warranty as to the date such 421-a Benefits will take effect. Section 421-a partial real estate tax benefits once granted may be revoked or reduced for non-payment or underpayment of taxes and for certain other reasons. In the event that 421-a benefits are not granted for any reason, then the real estate tax obligation for the Units will be based on the Units' assessed valuation, as determined by the New York City Department of Finance, multiplied by the then applicable tax rate and, as a result, real estate taxes would be significantly higher than if the Section 421-a Benefits had been granted. In such event, Purchasers shall not be entitled to a right of rescission.

PURCHASERS SHOULD NOT RELY UPON THE ISSUANCE OF 421-A TAX BENEFITS IN THEIR DECISIONS TO PURCHASE A UNIT, AS THE TAX BENEFITS MAY BE VERY DIFFICULT TO OBTAIN.

The Property Tax Professional has estimated 421-a benefits for the Building. This projection does not take into consideration that the exemption on increases to assessed value is subject to a limit ("AV Cap"). For the 2020/2021 tax year, the AV Cap is $92,675, and will increase 3%, compounded annually. The AV Cap applies on a per Unit basis, therefore, it is not permissible to assume the 421-a exemption benefits are distributed in exact proportion to Common Interest. The AV Cap is likely to affect larger Units in the Building so that 421-a tax savings for larger Units may be disproportionately less than the smaller Units and the total real estate taxes for all Units will be higher than the number set forth above. As Units are assessed every year, even if a Unit's assessed value is below the AV Cap in some years, the assessed value may exceed the AV Cap in subsequent years.

The Schedule A set forth in Part I of the Offering Plan allocates the estimated real estate taxes for the First Year of Operations to all Residential Units based on each Residential Unit's Common Interest. However, Sponsor makes no representation that the New York City Department of Finance will actually apportion the real estate taxes for each Unit based on Common Interest. Purchasers are urged to review the Property Tax Projection Letter with their own counsel to

understand the tax implications on their Unit. After the Condominium is divided into individual tax lots by the Department of Finance, each Unit will be taxed as a separate tax lot for real estate tax purposes, and individual Unit Owners will not be responsible for, nor will the Unit be subject to, any lien arising from the nonpayment of taxes on other Units. Every January, the New York City Department of Finance mails property owners a Notice of Property Value. Every May, the New York City Department of Finance issues a final assessment. After the Declaration and Tax Maps are filed, until the New York City Department of Finance issues the next Notice of Property Value or final assessment, an assessment of each Unit may not be shown on the New York City Department of Finance website even if the New York City Department of Finance has apportioned the real estate taxes for each Unit.

No warranty, guarantee or assurance is given that:

(i) any projected or estimated amount set forth above including, without limitation, the estimates of the Property's assessed valuation during the First Year of Operations; the estimates of the portions of such assessed valuations that will be allocable to the Units; the tax rate that will be in effect during the first year; will approximate the actual amount; or

(ii) the New York City Department of Finance will allocate the Property's aggregate assessed valuation between the Units in accordance with the appraised values used by Property Tax Professional for such purpose, or that the New York City Department of Finance will allocate the aggregate assessed valuation attributable to the Units among the different Units as described above.

6. The total monthly carrying charges do not reflect the after tax cost of the carrying charges. A non-corporate Residential Unit Owner who itemizes their deductions will be entitled to a deduction in computing their taxable income for Federal income tax purposes for bona fide mortgage interest incurred with respect to their Unit in the year paid provided that (a) the indebtedness is incurred in acquiring, constructing or improving the Unit, (b) the indebtedness is secured by the Unit, (c) the indebtedness does not exceed $750,000.00, or $375,000 in the case of a married individual filing a separate return, and (d) the Unit is a "qualified residence." The Federal limitation on the deduction for real estate taxes applies in the aggregate to, and is inclusive of, state and local income taxes paid as well. Thus, the maximum amount a Residential Unit Owner may deduct for real estate taxes and state and local taxes combined is $10,000 ($5,000 in the case of a married individual filing a separate return). The amount of any available deductions may vary due to changes in the interest rate, the allocation of constant debt service payments to interest, and state and local taxes. For some taxpayers, the foregoing deductions may also be impacted by the alternative minimum tax. No opinion is expressed as to the taxation of Unit Owners who are not New York State residents or not individuals. Please consult Counsel's Income Tax Opinion in Part I of this Offering Plan for all conditions of deductibility. Purchasers are strongly encouraged to consult with their own tax professionals to ascertain the tax costs and benefits, if any, of ownership of a Unit.

PURCHASERS ARE ADVISED THAT THE FOREGOING INFORMATION IS NOT

INTENDED AND SHOULD NOT BE TAKEN AS A GUARANTEE BY ANYONE THAT THE ANNUAL CARRYING CHARGES OR EXPENSES FOR THE FIRST OR ANY SUBSEQUENT YEAR OF OPERATION OF THE CONDOMINIUM WILL BE AS STATED, OR THAT SUCH CARRYING CHARGES OR EXPENSES WILL NOT VARY FROM THE AMOUNTS SHOWN IN SCHEDULE A.

SCHEDULE B

THE 37-14 34TH STREET CONDOMINIUM
ESTIMATED SCHEDULE OF INCOME AND EXPENSES
FOR FIRST FULL YEAR OF OPERATION
OCTOBER 1, 2020 - SEPTEMBER 30, 2021

INCOME

COMMON CHARGES - RESIDENTIAL UNITS	(1)	747,322.98
COMMON CHARGES - COMMERCIAL UNIT	(1)	31,540.16

EXPENSES

		Total	Residential	Commercial
LABOR	(2)	$331,631.04	$ 331,631.04	$ -
HEATING	(3)	$ -	$ -	$ -
ELECTRICITY	(4)	$ 67,044.00	$ 61,957.91	$ 5,086.09
GAS	(5)	$ 60,530.60	$ 55,938.63	$ 4,591.97
WATER CHARGES & SEWER RENTS	(6)	$ 73,682.50	$ 68,092.80	$ 5,589.70
REPAIRS, MAINTENANCE & SUPPLIES	(7)	$ 10,000.00	$ 9,241.38	$ 758.62
SERVICE CONTRACTS	(8)	$ 45,475.00	$ 44,412.93	$ 1,062.07
INSURANCE	(9)	$ 65,500.00	$ 60,531.04	$ 4,968.96
MANAGEMENT FEE	(10)	$ 36,000.00	$ 33,268.97	$ 2,731.03
LEGAL AND AUDIT FEES	(11)	$ 5,000.00	$ 4,620.69	$ 379.31
RESERVE FUND	(12)	$ 78,000.00	$ 72,082.77	$ 5,917.23
CONTINGENCY FUND	(13)	$ 3,000.00	$ 2,772.41	$ 227.59
OTHER	(13)	$ 3,000.00	$ 2,772.41	$ 227.59
TOTAL OPERATING EXPENSES		$778,863.14	$ 747,322.98	$ 31,540.16

Amounts are projected on the assumption that the First Year of Condominium Operation will be the year from October 1, 2020 to September 30, 2021. The actual First Year of Condominium Operation may begin earlier or later than that year. In the event the actual or anticipated commencement date of the First Year of Condominium Operation is to be delayed by six (6) months or more, Sponsor will amend the Plan to include a revised budget with current projections. If the amended budget exceeds this projected budget by twenty-five percent (25%) or more, Sponsor will offer all Purchasers the right to rescind their Purchase Agreements within not less than fifteen (15) days after the presentation date of the amendment containing such revised budget, and any Purchasers electing rescission pursuant to such offer will have their down payments returned, together with interest earned thereon, within a reasonable period of time. Sponsor may not declare a plan effective where there are any material changes to the budget if these changes have not been disclosed by a duly filed amendment to the offering plan.

The Notes to Schedule B below are an integral part of this Schedule and should be read in conjunction herewith.

FOOTNOTES TO SCHEDULE B

1. Income

These amounts represent the total Common Charges to be levied against and collected from the Unit Owners during the projected First Year of Operations. The Common Charges will be utilized by the Board of Managers to defray the operational expenses of the Condominium. Common Expenses are allocated among the Units on the basis of percentage of Common Interest.

No warranty is made with respect to the amount of any budget item. The projected budget has been reviewed by the Sponsor's budget expert, Continental Building Management, LLC. Based upon the consumption and related Building maintenance information that the Sponsor has provided to Continental Building Management, LLC, the budget is believed to be reasonable.

Expenses will be allocated in compliance with §339-m of the Real Property Law based on special or exclusive use or availability or exclusive control of particular units or common areas by particular unit owners. §339-m of the Real Property Law permits the Board of Managers of a Condominium to specially allocate and apportion common expenses among Residential and Commercial Units "based on special or exclusive use or availability or exclusive control of particular units or common areas by particular unit owners", if so authorized by the Declaration and By-Laws. Article 14 of the Declaration and Article 10 of the By-Laws, set forth in Part II of this Offering Plan, authorizes the Board of Managers to allocate the costs of operating the Condominium among the Residential and Non-Residential Unit Owners pursuant to the allocations set forth in the Budget for the Condominium's First Year of Operation. For purposes of allocating expenses, the Storage Units, Parking Units, and Cabana Units are considered Residential Units.

2. Labor

One full time superintendent, one full time doorman, and one part time porter is budgeted as the Condominium's staff. The staff will be non-union workers and their wages meet state minimum wage laws. Such level of staffing complies with all applicable housing and labor laws.

Wages:	$322,400.00
FICA:	$24,663.60
Unemployment Insurance:	$33,852.00
Disability Insurance:	$93.60
Workers' Compensation:	$14,379.04

This expense will be allocated in compliance with 339-m of the Real Property Law based on special or exclusive use or availability or exclusive control of particular units or common areas by particular unit owners; this expense has been allocated 100% to the Residential Units.

3. Heating

See Footnotes 4 and 5 for heating, cooling, and hot water costs.
The heating system in the Residential Units, residential lobby, and indoor space will be provided by variable refrigerant flow split systems/heat pump, including condensing units located on the roof and interior air handler units within each space. The estimated gas consumed for heating is 14,126 therms at $1.2 per therm. The heating system in the Commercial Unit will be provided by electrical heater.

The foregoing estimate is based upon the opinion letter dated October 11, 2017, from All City Engineering, P.C. whose address is 107 East Broadway, 5th Floor. New York, NY 10002. It is impossible to predict whether the budgeted figure will reflect the actual cost of gas during the First Year of Condominium Operation. This cost will vary with both the level of consumption and the rate charged by the utility company.

4. Electricity

The amount set forth is the estimate for the electricity consumed only by the Common Elements, since the electricity for Units is individually metered by Consolidated Edison, Inc. Electricity will be used to operate any water pumps, miscellaneous building equipment such as fans, heating system, and lighting throughout the interior and exterior of the Common Elements areas of the Building. Allocation of the electricity consumed with respect to the Common Elements is based on a master meter from Consolidated Edison, Inc explicitly for the Common Elements.

The projected Common Element electricity cost is based on a consumption of 335,220 kwh/year of electricity at an average cost of $0.20 per kwh.

The foregoing estimate is based upon the opinion letter dated October 1, 2019, from All City Engineering, P.C. whose address is 107 East Broadway, 5th Floor. New York, NY 10002. It is impossible to predict whether the budgeted figure will reflect the actual cost of electricity during the First Year of Condominium Operation. This cost will vary with both the level of consumption and the rate charged by the utility company.

See Schedule B-1 for the projected costs associated with individual electric consumption.

This expense will be allocated in compliance with 339-m of the Real Property Law based on special or exclusive use or availability or exclusive control of particular units or common areas by particular unit owners; this expense has been allocated 100% to the Residential Units.

5. Gas

There will be one gas meter for the Residential Units for the central domestic water heater. The

budget amount is for the first year of operation of the entire residential portion and is based on estimated total annual consumption: (100MBH/therm) of 50,442 therms at $1.2 per therm.

The foregoing estimate is based upon the opinion letter dated October 1, 2019, from All City Engineering, P.C. whose address is 107 East Broadway, 5th Floor. New York, NY 10002. It is impossible to predict whether the budgeted figure will reflect the actual cost of gas during the First Year of Condominium Operation. This cost will vary with both the level of consumption and the rate charged by the utility company.

This expense will be allocated in compliance with 339-m of the Real Property Law based on special or exclusive use or availability or exclusive control of particular units or common areas by particular unit owners; this expense has been allocated 100% to the Residential Units.

6. Water Charges and Sewer Rent

Water and sewer charges for the Building are assessed by the City of New York based on the actual amount of usage. There will be one meter servicing the entire Building, and the charges for same will be apportioned amongst all Units based on each Unit's Common Interest. It is estimated that the annual water consumption for Residential Units will be 5,416,600 gallons. Assuming retail use of the Commercial Units, the cost of water charges and sewer rents for the Commercial Units will be $2,400 per year. This is based on a cost of $9.87 per hundred cubic feet of water and sewer use (approximately 748 gallons).

The foregoing estimate is based upon the opinion letter dated October 1, 2019, from All City Engineering, P.C. whose address is 107 East Broadway, 5th Floor. New York, NY 10002. It is impossible to predict whether the budgeted figure will reflect the actual cost of water during the First Year of Condominium Operation. This cost will vary with both the level of consumption and the rate charged by the City of New York.

This expense will be allocated in compliance with 339-m of the Real Property Law based on special or exclusive use or availability or exclusive control of particular units or common areas by particular unit owners; this expense has been allocated 100% to the Residential Units.

7. Repairs, Maintenance and Supplies

This figure represents the estimated cost for ordinary maintenance and repairs of the Common Elements, including periodic painting, and supplies such as cleaning supplies, light bulbs, fixtures, hardware, garbage bags, etc. used in connection with the operation of the Common Elements.

This expense will be allocated in compliance with 339-m of the Real Property Law based on special or exclusive use or availability or exclusive control of particular units or common areas by particular unit owners; this expense has been allocated 100% to the Residential Units.

8. Service Contracts

Amounts indicated below are estimates made by the Managing Agent based upon the Managing Agent's experience of managing similar properties and certain written proposals set forth below. No maintenance or service contracts have been entered into as of the filing date of the Plan.

a) Elevator inspections at an estimated annual cost of $20,000
b) Extermination services at an estimated annual cost of $1,000
c) Fire extinguisher servicing at an estimated annual cost of $2,000
d) Fire alarm monitoring at an estimated annual cost of $4,000
e) Fire sprinkler compliance at an estimated annual cost of $2,000
f) HVAC maintenance at an estimated annual cost of $5,000
g) Door monitoring at an estimated annual cost of $3,000
h) Parking monitoring at an estimated annual cost of $2,700
i) Security Intercom service at an estimated annual cost of $5,775

9. Insurance

The insurance premiums are based on a letter dated October 11, 2018 from Mendel Pinson of Brooklyn Brokerage Corporation, having an address at 383 Kingston Avenue, Suite 165 Brooklyn, NY 11213 setting forth the following coverage:

Commercial Property	
Valuation:	RCV / Special Form
Co-Insurance:	NIL
Building:	$31,500,000
Business Income:	$3,000,000
Equipment Breakdown / Boiler & Machinery:	Included
Ordinance or Law Coverage A:	Included
Ordinance or Law Coverage B & C:	10%
Flood & Quake:	$5,000,000
Deductible:	$10,000
Flood & Quake Deductible:	$25,000

Commercial General Liability	
Limits of liability insurance:	
Per Occurrence:	$1,000,000
General Aggregate:	$2,000,000
Products Completed Operations:	$2,000,000
Personal and Advertising Injury:	$1,000,000
Damages to Premises Rented to You:	$100,000
Med-Pay:	$5,000
Hired & Non-owned Auto:	$1,000,000
Water Damage & Elevator Collision:	Included

Premium including taxes & fees for Commercial Property and Commercial General Liability:	$60,000.00

Commercial Excess Liability	
Limits of liability insurance:	
Per Occurrence:	$50,000,000
General Aggregate:	$50,000,000
Deductible/SIR:	$10,000
Premium including taxes & fees:	$2,800.00

Directors & Officers:	
Liability Limits:	$1,000,000
Premium including taxes & fees:	$1,500.00

Fidelity / Crime:	
Liability Limits:	$300,000
Premium including taxes & fees:	$1,200.00

Total annual premium:	$65,500.00

This is a one-year policy with no specific prohibitions against renewal.

In the opinion of Mr. Pinson, the foregoing coverage is sufficient to replace the Buildings in the event of a total loss during the First Year of Condominium Operation.

This quotation is a projection of rates for the First Year of Condominium Operation. However, because conditions in the insurance marketplace are volatile, it is not possible to predict exactly what the premiums will be during this time. Purchasers should be aware of the possibility of rate increases.

Sponsor will procure on behalf of the Board, on or before the date of the First Closing, the fire, casualty and general liability insurance required to be carried by the Condominium.

The insurance budget provides that the Condominium will have public liability insurance at closing. The insurance coverage meets the requirements of Sponsor's lender. The fire, casualty and general liability insurance carried by the Condominium will provide that each Unit Owner is an additional insured party; that there will be no cancellation without notice to the Board of Managers; a waiver of subrogation; a waiver of invalidity because of the acts of the insured and Unit Owners; and a waiver of pro-rata reduction if Unit Owners obtain additional coverage.

In addition to the insurance set forth herein, Unit Owners must obtain supplemental or additional insure their personal effects and the interior of the Unit itself for fire and liability. Such insurance commonly referred to as an "HO-6 Policy," will be paid for by the Purchaser. Unit Owners shall not be prohibited from carrying other insurance for their own benefit provided such policies contain waivers of subrogation and further provided that the liability of the carriers issuing insurance procured by the Board of Managers shall not be affected or diminished by reason of any

Unit Owner's other insurance.

This expense will be allocated in compliance with 339-m of the Real Property Law based on special or exclusive use or availability or exclusive control of particular units or common areas by particular unit owners; this expense has been allocated based on Common Interest.

10. Management Fees

Based on the management agreement to be entered into with Continental Building Management, LLC at or before the First Unit Closing, it is expected that the Managing Agent will receive an annual fee of $36,000 for the First Year of Condominium Operation. The management fees are at prevailing rates. Reference should be made to the section "Management Agreement" in Part I of the Offering Plan for further discussion of the terms of the Management Agreement. Expense allocated based on actual percentage of common interest. The Managing Agent and its principals have no relationship, past or present, to the Sponsor or principals of Sponsor, other than that the Managing Agent will be paid a fee for its services. The principal of Sponsor is exploring purchasing a minority, non-controlling interest in the Managing Agent. The Managing Agent will work in the best interest of the Condominium. If, or when, Sponsor consummates such a transaction, Sponsor and/or its principals will not engage in sweetheart deals.

11. Legal and Audit Fees

The estimate of legal expense is based upon any anticipated consultation with an attorney to be retained by the Condominium Board. Such consultation would include, but not be limited to, issues raised by the Board of Managers in connection with the operation of the Property. No separate counsel has been appointed by Sponsor for the Condominium, it is not anticipated that any legal expense shall be required by the Condominium during the First Year of Operations. Therefore, $0 has been allocated to this expense. However, in the event that legal services are required by the Condominium, then such services would be billed on an hourly rate or monthly retainer rate to be determined and negotiated by the Board of Managers with the attorney to be retained.

A certified public accountant will be responsible for auditing the Condominium's books and records and preparing the requisite audited financial statements. In addition, the accountant will be responsible for filing federal, state and city income tax returns. The amount set aside for this service is $1,500. This projection is based on an estimate received from MKL Tax CPA, PLLC with an office located at 143-70 Ash Avenue, flushing, NY 11355.

This expense will be allocated in compliance with 339-m of the Real Property Law based on special or exclusive use or availability or exclusive control of particular units or common areas by particular unit owners; this expense has been allocated based on Common Interest.

12. Reserve

A reserve fund is being established for the Condominium for major capital expenditures such as the renewal or replacement of building components or systems or the remedy of major building defects (the "Reserve Fund"). The Board of Managers, in its discretion, and subject to certain

restrictions contained in the By-Laws, may, in its discretion, decide in future years to increase or decrease the Reserve Fund line item in the Condominium's annual budget. It is anticipated that the reserve fund as it accumulates will be sufficient to pay for the replacement of any capital items likely to be needed within the first five (5) years of Condominium operation. No representation or warranty is made that the Reserve Fund will be, or is intended to be, adequate to cover current or future expenses, for the first or any subsequent year of Condominium Operation.

13. Contingency Fund

This expense item is included in the budget to provide funds for unforeseen expenses that are not itemized in the Schedule B budget. The budgeted amount is based upon the experience of the Sponsor's budget expert in operating similar buildings.

14. Other

This expense item is included in the budget to provide funds for miscellaneous expenses. The budgeted amount is based upon the experience of the Sponsor's budget expert in operating similar buildings.

It is projected that the Condominium will incur other expenses as outlined below:

Other Professional Fees	$1,000
License/Fees/Permits	$1,000
Postage/Messenger/Copying	$1,000
TOTAL	$3,000

IN THE OPINION OF CONTINENAL BUILDING MANAGEMENT, LLC, HAVING AN OFFICE AT 4916 3RD AVENUE BROOKLYN, NY 11220, THE PROJECTED INCOME IS ADEQUATE TO MEET THE ESTIMATED EXPENSES FOR THE FIRST YEAR OF CONDOMINIUM OPERATION. THE BUDGET, HOWEVER, IS NOT INTENDED AND SHOULD NOT BE TAKEN AS A GUARANTEE OR WARRANTY BY ANYONE THAT THE ANNUAL COMMON CHARGES OR COMMON EXPENSES FOR THE FIRST OR ANY SUBSEQUENT YEAR OF OPERATION OF THE PROPERTY BY THE BOARD WILL BE AS SET FORTH IN THE BUDGET. IN FACT, IT IS LIKELY THAT THE ACTUAL INCOME AND EXPENSES FOR THE CONDOMINIUM OPERATION WILL VARY FROM THE AMOUNTS SHOWN IN THE BUDGET.

SCHEDULE B-1

SCHEDULE OF ESTIMATED UTILITY EXPENSES FOR INDIVIDUAL UNITS

The following chart sets forth the estimated annual electric costs for lighting and operating typical electrical appliances in each Unit., and the estimated annual gas costs for the range, hot water heater, oven, and dryer.

Units	Estimated Annual Electric Consumption (KWH)	Estimated Electric Cost
Studio	12,725	$2,545/year or $212/month
1 Bedroom	15,985	$3,197/year or $267/month
2 Bedroom	18,155	$3,631/year or $303/month
3 Bedroom	27,840	$5,568/year or $464/month
Commercial	107,250	$32,175/year or $2,682/month

The projected Common Element electricity cost is based on an average cost of $0.20 per kwh for residential use and $.30 per kwh for commercial use. The foregoing estimate is based upon the opinion letter dated October 1, 2019, from All City Engineering, P.C. whose address is 107 East Broadway, 5th Floor. New York, NY 10002. It is impossible to predict whether the budgeted figure will reflect the actual cost of electricity during the First Year of Condominium Operation. This cost will vary with both the level of consumption and the rate charged by the utility company.

The projected rates are not guaranteed and it must be expected that these rates will increase with the passage of time and may be affected by many factors which are beyond the control of the Sponsor. Purchasers are advised that the projections are only estimates and actual consumption will be metered and will vary based on the personal needs of occupants. The cost of electricity for air conditioning use is not included in this analysis due to the wide range of usage fluctuation based on occupant preference.

In view of the varying costs of energy, it is not possible to predict with certainty whether the estimated figures will reflect the actual cost to be incurred during the First Year of Operations, although it is believed that reasonable provisions for increased costs have been made. The actual cost for electricity will vary depending upon various factors, including the amount of consumption, the rates of the utility company (which fluctuate periodically), and the possibility of changes in the methods of calculating charges by the utility company.

MARANS WEISZ & NEWMAN LLC
29 BROADWAY · SUITE 2400 · NEW YORK, NY 10006 · 212 968-0244

COMPLIANCE WITH REAL PROPERTY LAW §339-i

March 27, 2019

New York State Department of Law
Real Estate Finance Bureau
28 Liberty Street, 21st Floor
New York, NY 10005

Re: The 37-14 34th Street Condominium
37-14 34th Street, Long Island City, NY 11101

To Whom It May Concern:

All capitalized items not otherwise defined herein shall have the same meanings ascribed to them in the Offering Plan for the captioned Condominium.

This firm has over twenty years' experience in the practice of real estate law and has no beneficial interest in Sponsor or the profitability of the above referenced Condominium project.

The Sponsor has requested our opinion on whether the method used to determine the undivided percentage of common interest of each Unit in the Common Elements in the above referenced Condominium complies with Real Property Law §339-i ("§339-i").

In connection with this opinion, we have reviewed Schedule A, the Declaration and the Floor Plans and have assumed the statements and information contained therein are correct and accurate. We have not reviewed or verified the calculations of floor areas used in determining the sizes of the Units.

We have been advised that the Common Interests of each Unit have been allocated based upon floor space, subject to the location of such space and the additional factors of relative value to other space in the Condominium, the uniqueness of the Unit, the availability of Common Elements for exclusive or shared use and the overall dimensions of the particular Unit. This method of allocation is in accordance with §339-i(1)(iv) of the New York State Real Property Law. The aggregate Common Interests of all Units equal one hundred percent (100%). We have evaluated the allocation of Common Interests between the Units made by the Sponsor based on the foregoing factors and it is our opinion that the allocation of Common Interests is consistent with §339-i(1)(iv).

This opinion is confined to the matters addressed herein with respect to §339-i and is not

intended, nor should it be construed, as an opinion on any other aspects of the Condominium. Further, we assume no obligation to update or supplement this opinion to reflect any changes in statutory law or judicial precedent, or any changes in fact or circumstances that may hereafter come to our attention pertaining to the subject matter hereof.

We consent to the submission of this opinion to the New York State Department of Law in connection with the Offering Plan for the subject condominium conversion and to the reference to our name therein in connection with this opinion.

MARANS WEISZ & NEWMAN LLC

By: _____
Richard Marans, Member

COMMERCIAL UNIT

The Building contains one Non-Residential Unit, the Commercial Unit. Subject to compliance with all laws, including, without limitation, the Certificate of Occupancy for such Unit and any applicable zoning regulations, and except as otherwise provided herein and in the By-Laws, the Commercial Unit may be used for any purpose consistent with the Certificate of Occupancy, or for any lawful purposes. Examples of commercial uses include, but are not limited to, a retail store, pharmacy, school, laundromat, and bank. The Non-Residential Units may not be used for (i) any illegal or pornographic purposes; (ii) any establishment which provides sex related activities consisting of nude or semi-nude live performances, sex club, massage parlor, adult bookstore, peep shows; (iii) homeless shelter, or (iv) a drug or alcohol rehabilitation facility.

The Common Charges payable by Non-Residential Unit Owners shall be sufficient to cover the expenses attributable to said Units. Expenses will be allocated in compliance with §339-m of the Real Property Law based on special or exclusive use or availability or exclusive control of particular units or common areas by particular unit owners. §339-m of the Real Property Law permits the Board of Managers of a Condominium to specially allocate and apportion common expenses among Residential and Commercial Units "based on special or exclusive use or availability or exclusive control of particular units or common areas by particular unit owners", if so authorized by the Declaration and By-Laws. Article 14 of the Condominium Declaration and Article X of the By-Laws, set forth in Part II of this Plan, authorizes the Board of Managers to allocate the costs of operating the Condominium among the Residential and Non-Residential Unit Owners pursuant to the allocations set forth in the Budget for the Condominium's First Year of Operation. If any category of Unit Owner contends that any method of allocation determined by the Board is inequitable, the dispute may be submitted to arbitration as provided in the By-Laws. Since Non-Residential Unit Owners are responsible for all internal repairs and maintenance, heavier wear and tear attributable to commercial use of Non-Residential Units shall not impact the budget for the Condominium. Any increase in expenses for services provided to the Residential Units, but which are not utilized by the Non-Residential Units, or services which are provided to Non-Residential Units, but which are not utilized by the Residential Units, shall not impact the Common Charges payable by Non-Residential Unit Owners or by the Residential Unit Owners, nor shall such increases be passed along as an assessment or surcharge to either party. If the Board of Managers incurs any increase in insurance premiums as a direct result of an increase in insurance risk resulting from any special use of a Non-Residential Unit, such Unit Owner shall bear the cost of any such increase in insurance premiums over the premiums that would be charged but for the extra insurance risk due to the use of such Unit.

Non-Residential Unit Owners have certain special rights under the Declaration. Except to the extent inconsistent with the By-Laws or prohibited by law, and unless there shall be a material effect on the Residential Unit Owners, a Non-Residential Unit Owner shall have the right, without the vote or consent of the Board to subdivide and sublet any or all of the Unit. A Non-Residential Unit may be divided into any number of smaller Condominium Units, or combined into any number of larger Units, provided that the total allocation of common interest of the newly created Units may not be altered by such sub-division or combination; and further provided that all such subdivisions must be in conformity with applicable zoning rules and the Certificate of Occupancy for the premises. Non-Residential Unit Owners shall not be required to seek the approval of the Board of Managers of the Condominium unless such change in the use or configuration of the Unit

would have a material effect on the Residential Unit Owners. Except as set forth in the preceding sentence, neither the Board of Managers nor the Residential Unit Owners will have any right to restrict or limit any lawful use of a Non-Residential Unit. No representation or warranty is made as to who the owner or tenants of the Unit may be at any time, or as to the uses to which such Unit may be put at any time. See the By-Laws for restrictions of use of the Non-Residential Units. The Sponsor-Controlled Board shall not be permitted to amend the By-Laws to permit any of the currently impermissible uses of the Non-Residential Units.

In addition, Non-Residential Unit Owners will have an easement through and along all of the General Common Elements and Residential Common Elements to install, maintain, operate, repair and replace any and all cables, conduits, wires, apparatus and equipment as may be required in connection with telecommunications and the general operation of the Non-Residential Unit and similar equipment. Any utility, cable TV or similar company that is entitled by law to install equipment in such portion of the Common Elements shall have an easement through the Non-Residential Unit in such manner as shall be reasonably determined by the Board of Managers. Each of the foregoing easements shall be exercised in such manner as to not unreasonably disrupt the use by other Unit Owners of their respective Units.

PARKING UNITS

Parking Units located in the cellar are for parking purposes. There are Forty-Three (43) Parking Units. Nine (9) Parking Units are parking spaces on the ground of the cellar, of which two (2) are handicapped spaces. Thirty-four (34) Parking Units are automated parking spaces; they are part of an unattended semi-automated stacker system, CARMATRIX by Harding Steel Inc. Parking Units are allocated Common Expenses in accordance with their Common Interest. The Common Charges payable by each Parking Unit is sufficient to cover the expenses fairly attributable to such Unit. Parking Units may only be used for parking purposes in accordance with the zoning regulations. Parking Unit Owners have the same rights as those of Residential Units.

Parking Unit P4 and P43 have been designated as a handicapped Parking Unit and will be the last Parking Units sold if not previously been sold to a Purchaser who themselves or a member of their family has a vehicle with handicapped plates. The purchase of Parking Unit and any subsequent sale or transfer of it is subject to the following covenants and restrictions in the deed:

> In the event the present or future owner of a Unit in the Condominium, or a member of their family residing in the Unit, becomes handicapped and acquires handicapped plates for their vehicle, and said Unit Owner is the owner of a Parking Unit, said Unit Owner has the right to demand that the owner of the handicapped Parking Unit trade the handicapped Parking Unit they own with said handicapped Unit Owner.
>
> In the event the present or future owner of a Unit or member of their family residing in the Unit, becomes handicapped and said Unit Owner does not own a Parking Unit, said Unit Owner has the right to demand that the owner of Parking Unit __ sell it at then current, fair market value to said handicapped Unit Owner. All costs and expenses entailed in the transfer of title to the Parking Unit, including without limitation, title abstracts, title insurance, transfer taxes and recording fees and reasonable attorney fees shall be borne by the party requesting the transfer.
>
> The owner of Parking Unit __ must comply with the aforementioned demand upon thirty (30) days written notice. Notice shall be delivered by hand delivery, certified or registered mail, return receipt requested, or overnight delivery service. Alternative means may be used where written acknowledgement of such delivery is delivered by the party receiving such notice.
>
> If the parties cannot agree on the fair market value of Parking Unit __ then the parties agree to submit the matter to binding arbitration in accordance with Article XVI of the By-Laws of the condominium.

Purchasers should note the Parking Units may be subject to the requirements of MDL §60 and ZR25-412, as applicable. As such, the Parking Units can be rented by Sponsor or by Purchasers of a Parking Unit to persons other than a Residential Unit Owner. However, in the event a Parking Unit is being rented by a non-occupant and an occupant of the Building makes a written request for the Parking Unit, the Parking Unit must be offered to the occupant making such request. Purchasers are advised to refer to MDL §60 and ZR25-412 for further information.

CHANGES IN PRICES AND UNITS

Changes in Prices

The Units will be offered at the prices set forth in Schedule A. Offering prices may be changed by a duly filed amendment to the Offering Plan when the change in price is an across-the-board increase or decrease affecting one or more lines of Units or Unit models, or is to be advertised, or is a price increase for an individual Purchaser. However, prices and specified terms of sale may be negotiated on an individual basis and Sponsor may enter into an agreement with a Purchaser to sell one or more Units at lower prices than those set forth in Schedule A, provided that in the case of a price increase to an individual Purchaser an amendment containing the new price will be submitted to the Department of Law prior to a contract being entered into at a higher price. In the case of an individual price decrease, no amendment shall be necessary for the price to be effective. If an amendment whose sole purpose is to effect a change in price is submitted to the Department of Law for filing, and no prior amendment has been submitted to but not yet filed by the Department of Law, the amendment shall be deemed filed when submitted.

Changes in Units

Site conditions may cause variations in walls, ceilings, heights and other dimensions from those included in the Floor Plans or otherwise described in this Offering Plan. If the layout and dimensions of a Unit does not materially deviate from the Plans and Specifications, subject to Sponsor's right to make changes necessitated by site conditions, a Purchaser will not be excused from purchasing the Unit for such reason and will not have any claim against Sponsor as a result of such non-material deviation. A decrease in a unit’s area of 5% or less will not affect a Purchaser’s obligations and may not trigger Purchaser’s right to consent unless such decrease is determined to be a material change. There is a rebuttable presumption that an area that is diminished by 5% or less is not material. Sponsor will have no liability to any Purchaser nor will any Purchaser be entitled to a credit, offset or reduction in the Purchase Price for Purchaser's Unit or otherwise be relieved from any obligations under the Purchase Agreement, by virtue of an immaterial inaccuracy or error in the Floor Plans.

In order to meet the possible varying demand for number and type of Units, or to meet the particular requirements of prospective purchasers, or for any other reason, Sponsor reserves the right at any time, both before and after recording the Declaration and without the consent of Purchasers, Unit Owners or the Board of Managers, with respect to Unsold Units, to (i) change or reverse the layout of any Unsold Unit and make adjustments in interior dimensions of Unsold Units, (ii) change the number of rooms in any Unsold Unit, (iii) change the size and/or number of Unsold Units by subdividing one or more such Unsold Units into two or more separate Unsold Units, combining separate Unsold Units into one or more Unsold Units, altering boundary walls of Unsold Units, or otherwise, including, without limitation, incorporating any wall, hallway or portion thereof, space, or other area abutting Unsold Units into one or more Unsold Units or otherwise, and (iv) if appropriate, reapportion the Common Interest among the Unsold Units affected by such change.

In the event Sponsor changes the size and/or number of Units, Sponsor shall increase or decrease the Common Interests appurtenant to such affected Units accordingly; however, the

aggregate amount of the Common Interests of all of the Units shall remain at 100%. As a result of such a reapportionment of Common Interests of affected Units, the amount of the Common Charges and the real estate taxes and assessments payable by the Owners of such affected Units will be increased or decreased in direct proportion to changes made to Common Interests. However, the amount of the Common Charges and real estate taxes and assessments payable by the Owners of Units unaffected by these changes and for whom there has been no change in Common Interest will not be varied. Common Interest need not be reapportioned if a portion of the public hallway is incorporated into a Unit or Units as described above.

No change will be made in the size or number of Units and/or their respective percentages of Common Interest, and no material change will be made in the size or quality of Common Elements, except by amendment to the Offering Plan and, when applicable, to the Declaration. Unless an affected Purchaser consents, no material change will be made in Unit size, layout, or percentage of Common Interest if a Purchase Agreement has been executed and delivered to the Sponsor for that Unit and the Purchaser is not in default. Unless all Purchasers not in default consent, no material change will be made in the size and no material adverse change will be made in the quality of Common Elements. There is a rebuttable presumption that a change in the location of appliances, equipment, and fixtures is not material.

Notwithstanding anything in this Offering Plan to the contrary, if Sponsor must make material changes to size, dimension, Common Interest, floor space or layout of Units or to size, dimension, layout, quantity or quality of Common Elements, due to site conditions, governmental requirements or other unforeseen circumstances beyond Sponsor's control, and after Sponsor has exhausted all reasonable alternatives to avoid any such material changes and it has been reasonably determined that there are no reasonable options to maintain such size, dimension, common interests, floor space or layout of Units or the size, dimension, layout, quantity or quality of Common Elements disclosed in the Offering Plan, Sponsor will amend the Offering Plan accordingly to disclose the changes. Any Purchaser under contract to purchase a Unit whose purchase would be materially and adversely affected by such changes, will be given the right to rescind the Purchase Agreement and at least fifteen (15) days within which to exercise this right, and if rescission is exercised, will receive back the Deposit made thereunder together with any interest earned thereon.

The provisions of the Declaration concerning combination and/or partitioning of any Unit by the Sponsor or Successor Sponsor may not be modified or deleted by amendment without the written consent of the same. Sponsor shall have the power to execute any documents on behalf of the Condominium required in connection with any amendment to the Declaration or By-Laws permitted or required above or to any application or other documents required in connection with any such amendment by any administrative agencies asserting jurisdiction there over, including, without limitation, any application or documents required by the Building Department and/or the Real Estate Assessment Bureau in connection with designations of separate tax lots for the affected Units or otherwise. Nonetheless, the Unit Owners not involved in any such change and the Board of Managers shall execute promptly and without charge any documents or applications necessary or convenient in connection with the effectuation of the provisions hereof, and by accepting the deed for their Unit a Unit Owner grants to the Board of Managers an irrevocable power of attorney coupled with an interest to execute, deliver and/or record any amendment to the Declaration and the By-Laws and any and all documents and applications necessary or convenient to effectuate the

foregoing. The form of said Power of Attorney is contained in Part II of the Offering Plan. Sponsor and Successor Sponsors may have the rights described herein so long as Sponsor or Successor Sponsor continues to own an Unsold Unit.

INTERIM LEASES

Unsold Units may be leased to Purchasers who have executed a Purchase Agreement for such Unit at any time, both before and after the First Closing. Once a Purchase Agreement is accepted for a vacant Unit, however, and for so long as such Purchase Agreement is in effect, such Unit may only be leased to the Purchaser thereof pursuant to a lease (an "Interim Lease") on the terms set forth in this Section. The form of the Interim Lease is located in Part II of the Offering Plan. Purchasers may be responsible for a $1,000.00 fee for preparation of Interim Lease Agreement.

Interim leases will not be subject to the New York City Rent Law (rent control), the Emergency Tenant Protection Act of 1974, the New York City Rent Stabilization Law, or the New York City Rent Stabilization Code, as such laws are presently in effect. The term of each such Interim Lease shall expire on the earliest to occur of (i) the date of closing of title to the Unit covered by such Interim Lease, (ii) the date fixed in the Interim Lease for the expiration of the term, (iii) the date upon which the Interim Lease is terminated at the option of Sponsor by reason of a default by the Purchaser-tenant under the Interim Lease or a casualty or condemnation affecting the Unit or (iv) the date upon which the Interim Lease is terminated by the Purchaser-tenant or Sponsor as provided below. The rent payable under the Interim Lease shall be negotiated by the parties but shall in no event exceed the maximum legal rent, if any, permitted under Applicable Laws.

In the event a Purchaser takes possession of a Unit prior to Closing pursuant to an Interim Lease, upon an uncured default by Purchaser under the terms of the Interim Lease which is not cured within 30 days after notice thereof, or immediately after Purchaser exercises any right of rescission with respect to the Purchase Agreement, Purchaser's right to occupy the apartment will terminate, and Purchaser must vacate the Apartment. Purchaser shall pay to Sponsor $500.00 per day for each day Purchaser remains in possession following the periods set forth above; this amount will be due in addition to any liquidated damages due pursuant to the Purchase Agreement and will not be released from escrowed funds. Nothing contained herein shall be construed so as to limit Sponsor's ability to have Purchaser evicted from the premises and to pursue any other legal remedy available to Sponsor, nor shall anything herein be construed as a waiver by the Sponsor of their right to retain, as liquidated damages, the Deposit deposited upon execution of the Purchase Agreement. Sponsor may utilize a default under the Interim Lease to declare a default under the Purchase Agreement, however, Sponsor must first either obtain an order of eviction or other judgment or order from a court or agency of competent jurisdiction against the Purchaser, unless the Purchaser has vacated the unit. Nevertheless, Sponsor may utilize a default under the Purchase Agreement to declare a default under the Interim Lease without a judgment or order from a court or agency of competent jurisdiction against the Purchaser and then commence eviction proceedings. See the "Form of Interim Lease Agreement" set forth in Part II of the Offering Plan.

In the event that the Purchaser-tenant should exercise any right to terminate or rescind the Purchase Agreement or Interim Lease, such termination or rescission will be contingent upon surrendering possession of their Unit and leaving the same vacant, in good condition and broom clean within thirty (30) days after he elects to terminate or rescind. Purchaser must also pay any rent due and payable under their Interim Lease. Nothing contained herein shall relieve any Purchaser of liability for damage to their Unit or of any other liability under the Purchase

Agreement or Interim Lease.

In no event will any portion of the rental paid under an Interim Lease be credited towards the Purchase Price of the Unit subject to the Interim Lease unless such term is negotiated by Sponsor and Purchaser.

If the Offering Plan is abandoned, a Unit occupied pursuant to an Interim Lease shall be subject to the provisions of any Applicable Rent Laws that may be in effect with respect to such Unit at the time of such abandonment.

A person in possession who is not an owner cannot insure the Unit since they have no ownership interest, and the Unit cannot be doubly insured. The risk of loss is assumed by a Purchaser who has taken possession of the Unit prior to closing to the extent that such loss is not covered by the Condominium's or Sponsor's insurance.

The Sponsor and its agents will not discriminate against any person on the basis of race, creed, color, national origin, sex, age, disability, marital status or other grounds prohibited by law.

Any Interim Lease shall be subordinate to the mortgage held by the Lender. Any Interim Lease shall be deemed invalid and of no force and effect without the prior written consent of the Lender. Every occupant of the Unit shall be required to execute the Interim Lease.

Smoking and using electronic cigarettes is prohibited at all times in all enclosed common areas of the Building, as required by law. Enclosed common areas of the Building include, but is not limited to, indoor Common Elements such as a lobby, hallway, and stairway. Smoking and using electronic cigarettes is permitted at all times in all dwelling units and outdoor areas, unless otherwise restricted by law. This policy applies to any person on the premises. Complaints about violations shall be made promptly to the Board of Managers. Complaints should be made in writing and should be as specific as possible, including the date, approximate time, location where smoke was observed, description of incident, and apparent source of smoke. Unit Owners shall provide to prospective buyers or renters of their Units a copy of this Smoking Policy including by annexing it to any contract of sale or lease of their Unit.

If there are any inconsistencies between the Interim Lease and the Offering Plan, the terms of the Offering Plan shall govern.

PROCEDURE TO PURCHASE

Offering Plan

Offering Plan sets forth all the material terms of the offer to sell Units in the Condominium. The Condominium is subject to and will comply with the New York Condominium Act. The Offering Plan may be amended from time to time by amendment duly filed with the New York State Department of Law and served pursuant to 13 NYCRR § 20.1(d). The Offering Plan, including Part II, constitutes the entire offer of the Sponsor. Copies of the Offering Plan and all exhibits submitted to the Department of Law in connection with the filing of this Offering Plan will be available for inspection without charge by prospective Purchasers or their attorneys and copying at a reasonable charge at the Building after the on-site sales office is open and at the office of the selling agent or Sponsor. Copies of the Offering Plan will be available to prospective purchasers for a $200.00 deposit, made payable to Sponsor, in the form of a check; Sponsor shall hold the $200.00 check without depositing it, and shall return the check upon the earlier of (a) the return of the Offering Plan in good condition, such good condition to be determined at the sole discretion of Sponsor; or (b) the Closing of Purchaser's Unit. If such prospective purchaser does not close on a Unit, or Sponsor determined the Offering Plan was not returned in good condition, then the $200.00 check will be deposited by Sponsor and shall not be returned. Copies of the Offering Plan and all exhibits submitted to the Department of Law are also available for inspection, without charge, and copying, at a reasonable fee, at the New York State Department of Law, 28 Liberty Street, 21st Floor, New York, NY 10005.

Purchase Agreement

A person desiring to purchase a Unit will be required to execute in duplicate a Purchase Agreement, substantially in the form set forth in Part II of this Offering Plan, and deliver the Purchase Agreement to Sponsor together with a check equal to the sum of ten percent (10%) of the purchase price. Said check shall be drawn to the order of "Marans Weisz & Newman LLC, as Escrow Agent." All funds received from Purchasers, whether in the form of checks, drafts, money orders, wire transfers, or other instruments which identify the payor, shall be made payable to or endorsed by Purchaser to the order of Marans Weisz & Newman LLC as Escrow Agent.

Purchasers will be afforded at least three (3) business days to review the Offering Plan and all filed amendments thereto prior to executing a Purchase Agreement. In the event a Purchaser has not had at least three (3) business days to review the Offering Plan and all filed amendments prior to signing and delivering a Purchase Agreement, the Purchaser may rescind within seven (7) days of delivery of an executed Purchase Agreement together with the required Deposit by giving the Sponsor written notice of such rescission by personal delivery (or if sent by mail such notice must be postmarked within the seven-day period).

If the Sponsor elects to accept the Purchase Agreement, one counterpart thereof signed by the Sponsor or a pdf version of the Purchase Agreement signed by Sponsor if the Agreement allows for same, will be returned to the Purchaser or Purchaser's counsel within thirty (30) days of delivery of the same to the Sponsor. If the Purchase Agreement is not accepted by Sponsor by the end of such period it will be deemed rejected. Sponsor may reject any Purchase Agreement, without cause or explanation, so long as such rejection is not based upon race, creed, color, sex,

national origin, ancestry, or any other ground proscribed by law. In the event of such rejection, the Purchaser's Deposit will be promptly refunded. The Purchase Agreement will not be binding upon Sponsor until a copy executed by or on behalf of the Sponsor is delivered to the Purchaser or Purchaser's counsel.

The Purchase Agreement is contingent upon the Offering Plan being declared effective. If the Offering Plan is abandoned, Purchase Agreements will be terminated, and all monies held by Sponsor, including advances made for upgrades, extras, or custom work, shall be returned to Purchasers within five (5) business days after the amendment abandoning the Offering Plan has been accepted for filing and neither party shall have any further rights or obligations arising thereunder or relating thereto. The relevant escrow trust fund provisions are included in Paragraph 4 of the Purchase Agreement. The Escrow Agent shall execute the Purchase Agreement, solely as to Paragraph 4 of the Purchase Agreement, prior to delivering the Purchase Agreement, fully executed, to Purchaser.

A complete copy of the form of Purchase Agreement is included in Part II of the Offering Plan.

Purchase Agreement is Not a Lien

Neither the Purchase Agreement nor the Deposit or any payment given for special work is a lien against the Property or the Unit. Purchaser may not record the Purchase Agreement and will be in default if Purchaser attempts to record it.

Conflicts between Plan and Purchase Agreement

Any conflict between the Offering Plan and the Purchase Agreement will be resolved in favor of the Offering Plan. However, this shall only be applicable to initial Purchasers who purchase their Unit from Sponsor.

The Purchase Agreement and Plan may not contain, or be modified to contain, a provision waiving Purchaser's rights or abrogating Sponsor's obligations under Article 23-A of the General Business Law.

Purchaser Financing

The terms and provisions of the Purchase Agreement and Purchaser's obligations thereunder are not contingent upon Purchaser securing financing of the Purchase Price (or any portion thereof). Purchaser's failure to obtain such financing will not relieve Purchaser of Purchaser's obligations under the Purchase Agreement. A Purchaser who does not obtain financing may lose the Deposit if they are unable to otherwise raise the monies for the balance of the purchase price. A Purchaser who requires financing is advised to consult with a lending institution before execution of this Purchase Agreement. Sponsor makes no representation whatsoever as to the terms, cost, or availability of any mortgage or other financing. Purchaser further understands and agrees that if Purchaser chooses to finance Purchaser's purchase of the Unit through a lending institution and obtain a commitment therefrom, neither a subsequent change in the terms of such

commitment, the expiration or other termination of such commitment, nor any change in Purchaser's financial status or condition shall release or relieve Purchaser of Purchaser's obligations pursuant to this Agreement.

Purchasers should note that in the current real estate market, banks and other lenders are imposing various restrictions on purchase financing. Such restrictions include requiring that a certain percentage of apartments in a building or group of buildings be sold before a lender will consider making a loan. Thus, it may be possible for a purchaser to experience difficult obtaining a loan in a building or group of buildings where the sponsor or holder of unsold shares has not sold a substantial percentage of apartments in the building or group of buildings, which in some cases may be as high as 70%. Moreover, some lenders will not provide financing in a building or group of buildings where an investor other than the original sponsor has an ownership interest of 10% or more. It also may be difficult for a purchaser to resell an apartment if prospective buyers are unable to obtain a loan due to the same minimum sales ad investor ownership restrictions.

Balance of Purchase Price and Closing Documents

After the Offering Plan has been declared effective, Sponsor will fix dates for closing title to all Units for which Purchase Agreements have been executed by serving notice on each Purchaser that the Offering Plan was declared effective on a certain date and setting such Purchaser's Closing Date. Such notice will be served in compliance with the regulations promulgated by the New York State Department of Law no less than thirty (30) days before the date set for the Closing of the Units. Purchasers may waive this thirty (30) day notice provision in a writing addressed to Sponsor.

TIME IS OF THE ESSENCE with respect to Purchaser's obligations to pay the balance of the purchase price and to pay, perform or observe Purchaser's other obligations under the Purchase Agreement. Upon the occurrence of an Event of Default as defined in the Purchase Agreement, Purchaser shall have thirty (30) days from the giving of written notice of such default to cure the specified default. If the default is not cured within such thirty (30) days, TIME BEING OF THE ESSENCE, then Sponsor, in its sole discretion, may thereupon terminate the Purchase Agreement. If Sponsor so elects to terminate, the Purchase Agreement shall be deemed terminated, and Sponsor shall have the right to retain, as and for liquidated damages, the Deposit (and any interest earned of the Deposit) plus the costs incurred by Sponsor for any special work, if any, in the Unit ordered by the Purchaser. Upon the termination of the Purchase Agreement, Purchaser and Sponsor will be released and discharged of all further liability and obligations under the Offering Plan and the Agreement, and the Unit may be sold to another as though the Purchase Agreement had never been made, and without accounting to Purchaser for any of the proceeds for such sale.

NEITHER SPONSOR NOR PURCHASER SHALL CHALLENGE THE VALIDITY OF THE PROVISIONS OF THE PURCHASE AGREEMENT OR THE OFFERING PLAN WITH RESPECT TO LIQUIDATED DAMAGES OR ANY RIGHT OF SPONSOR SET FORTH HEREIN OR THEREIN TO RETAIN THE DEPOSIT IN THE EVENT OF A PURCHASER DEFAULT. SUCH PROVISIONS HAVE BEEN AGREED TO VOLUNTARILY, AFTER NEGOTIATION, WITHOUT DURESS OR COERCION BY ANY PARTY UPON ANY OTHER PARTY, AND WITH EACH PARTY HAVING BEEN (OR HAVING HAD FULL AND ADEQUATE OPPORTUNITY TO BE) REPRESENTED AND ADVISED BY COUNSEL,

ACCOUNTANTS, BROKERS, APPRAISERS AND OTHER EXPERTS AND ADVISORS OF ITS OWN CHOOSING.

Each Purchaser will be required to pay certain fees to Sponsor's attorneys including, but not limited to, a fee of $2,500.00 and ACRIS preparation fee of $250.00 for the Purchaser's Unit which will cover the legal and other fees and expenses of processing the sale of the Unit. In the event the Closing does not take place on the Closing Date, through no fault of Sponsor and provided further that Sponsor is ready, willing and able to close on the Closing Date, (i) the apportionment of those items set forth in the Purchase Agreement shall be made as of the originally established Closing Date rather than as of the date the Closing actually occurs, (ii) Purchaser shall pay Sponsor, at Closing, interest on the unpaid balance of the purchase price for each day starting from (and including) the originally scheduled Closing Date to (and including) the day before the actual Closing Date, where interest shall be equal to the highest legal rate as of the Closing Date (the current rate is 16% per annum). The following additional charges may apply:

i. $500.00 to Sponsor's attorney if the Closing is not held at Sponsor's attorneys' offices at the request of Purchaser or Purchaser's lender.
ii. $500.00 to Sponsor for each adjournment of the Closing requested or caused by Purchaser or Purchaser's lender.
iii. $500.00 to Sponsor's attorney if the Closing is held outside New York City at the request of Purchaser or Purchaser's lender.
iv. $1,000.00 to Sponsor's attorney for the preparation of a letter of default.
v. $350.00 to Sponsor's attorney if a Purchaser shall obtain mortgage financing through a lender to defray the additional costs associated therewith.
vi. $1,000.00 to Sponsor's attorney for an assignment agreement, if requested by Purchaser and provided Sponsor has consented thereto.
vii. $1,000.00 to Sponsor's attorney for preparation of Interim Lease Agreement.

Nothing herein shall be construed to mean that the Sponsor must grant an adjournment of title when requested to do so. If at a Purchaser's request Sponsor grants an adjournment or adjournments of their closing of title in excess of five (5) days in the aggregate, the Sponsor has the option of collecting an additional five percent (5%) of the purchase price of the Unit as an additional Deposit.

Sponsor must make a written demand for payment after default at least 30 days before forfeiture of the Deposit may be declared.

At the Closing, Purchaser shall be required to sign and deliver a Power of Attorney to the Board of Managers of the Condominium covering the Unit in the form contained in Part II of the Offering Plan and pay certain closing fees, costs and adjustments (see the section "Unit Closing Costs and Adjustments"). Failure to sign and deliver a Power of Attorney will be a default by Purchaser. The Purchaser will also be required to pay the New York State and New York City real property transfer tax returns, mortgage recording taxes and Sponsor's and Purchaser's attorney fees covering the sale of their Unit, any real estate reporting return and statement required by the Internal Revenue Code or the regulations thereunder, all other documents required by law, and all other documents reasonably required by Sponsor or required under Purchaser's Purchase Agreement. The balance of the purchase price is also payable at Closing. This amount shall be

paid by wire transfer or a bank, cashier's, or certified check, drawn on or issued by a New York bank, trust company of other New York lending institution which is a member of the New York Clearing House Association, payable to Sponsor (or to any one Sponsor designates or directs in writing).

Default by Purchaser

If a Purchaser defaults in making any payments due under the Purchase Agreement or fails to execute and deliver documents, make the payments described above, or perform any of their other obligations under the Purchase Agreement, then Sponsor may at its option give written notice of default under the Purchase Agreement to Purchaser. If the default is not cured within thirty (30) days after written notice thereof, then the Purchase Agreement shall be deemed terminated and Sponsor shall be entitled to the payment due under the Purchase Agreement and any payments made thereunder including any costs for any special work ordered by Purchaser together with interest earned thereon, if any, as and for liquidated damages. Termination of a Purchase Agreement will permit Sponsor to sell the Unit to others as though the Purchase Agreement had never been made and the Purchaser shall not have any further rights against or obligations to Sponsor, the Condominium or others purchasing such Unit.

In the event the Sponsor cannot convey title to the Unit by reason other than the default of the Purchaser, all monies deposited by the Purchaser shall be returned to the Purchaser. However, Sponsor may attempt to cure its inability to convey title and if it does so, Sponsor shall be entitled to an adjournment of the Closing Date for six months.

The Purchase Agreement contains the terms and conditions upon which the Unit will be sold and should be read carefully by the prospective Purchaser and their legal or financial representative before being executed. Purchasers should be aware that if any conflict exists between the Offering Plan and the Purchase Agreement, the provisions of the Offering Plan shall in all events control; however, this shall only apply to initial Purchasers who purchase a Unit from Sponsor. The terms of sale and other provisions of an actual Purchase Agreement entered into between Sponsor and any Purchaser may vary from the provisions contained in the form of Purchase Agreement contained in Part II of the Offering Plan due to individual negotiations. However, such variations shall have no effect on the provisions of any other Purchase Agreement theretofore or thereafter entered into between Sponsor and any other Purchaser nor shall such variations contain, or be modified to contain, a provision waiving Purchaser's rights or abrogating Sponsor's obligations under article 23-A of the General Business Law.

No Representations

Purchaser acknowledges that Purchaser has not relied upon any sales plans, selling brochures, advertisements, representations, warranties, statements or estimates of any nature whatsoever, whether written or oral, made by Sponsor, Selling Agent or otherwise, including, but not limited to, any relating to the description or physical condition of the Property, the Building or the Unit, or the size or the dimensions of the Unit or the rooms therein contained or any other physical characteristics thereof, the services to be provided to Unit Owners, the estimated Common Charges allocable to the Unit, the estimated real estate taxes of the Unit, the ability to rent the Unit and/or the rental income therefore, the right to any income tax deduction for any real estate taxes

or mortgage interest paid by Purchaser, or any other data, except as herein or in the Offering Plan specifically represented; as such, Purchasers are urged to ensure material representations are incorporated into the negotiated Purchase Agreement. Purchaser acknowledges it has relied solely on their own judgment and investigation in deciding to enter into the Purchase Agreement and purchase the Unit. No person has been authorized to make any representations on behalf of Sponsor. No oral representations or statements shall be considered a part of the Purchase Agreement. Purchaser shall not be relieved of any of Purchaser's obligations under the Purchase Agreement, and Purchaser agrees to purchase the Unit, without offset or any claim against, or liability of, Sponsor, by reason of any immaterial inaccuracy or error, including but not limited to immaterial inaccuracy or error in the layout or dimension of the Unit or any part thereof, or of the Common Elements, except as provided under applicable law or as set forth in this Offering Plan. A decrease in a unit's area of 5% or less will not affect a Purchaser's obligations unless such decrease is determined to be a material change. There is a rebuttable presumption that an area that is diminished by 5% or less is not material. Notwithstanding the foregoing, representations that are inconsistent with this Offering Plan or the Purchase Agreement will not affect Sponsor's liability under the Martin Act.The provisions of this paragraph shall survive the closing of title or the termination of the Purchase Agreement.

Costs of Enforcing and Defending Agreement.

If Sponsor prevails, Purchaser shall be obligated to reimburse Sponsor for any reasonable legal fees and disbursements incurred by Sponsor, as determined by a court of law, in successfully defending Sponsor's rights under the Purchase Agreement or, in the event Purchaser defaults under the Purchase Agreement, in canceling the Purchase Agreement or otherwise enforcing Purchaser's obligations thereunder. If Purchaser prevails, Purchaser will not be reimbursed for any legal fees or disbursements incurred by Purchaser in successfully defending Purchaser's rights under the Purchase Agreement or otherwise enforcing Sponsor's obligations thereunder. These provisions shall survive closing of title or the termination of the Purchase Agreement.

Waiver of Jury Trial

Except as prohibited by law, Purchasers expressly waive trial by jury in any litigation arising out of, connected with, or relating to the Purchase Agreement or the relationship created in the Offering Plan. With respect to any matter for which a jury trial cannot be waived, the parties agree not to assert any such claim as a counterclaim in, nor move to consolidate such claim with, any action or proceeding in which a jury trial is waived. Any lawsuit arising out of the Purchase Agreement shall be governed by the laws of the State of New York and shall be brought in the county in which the Building is located. The provisions of this paragraph shall survive closing of title or the termination of the Purchase Agreement.

Waiver of Diplomatic or Sovereign Immunity.

Purchaser waives any and all immunity from suit or other actions or proceedings and agrees that, should Sponsor or any of its successors or assigns bring any suit, action or proceeding in New York or any other jurisdiction to enforce any obligation or liability of Purchaser arising, directly or indirectly, out of or relating to the Purchase Agreement, no immunity from such suit, action or proceeding will be claimed by or on behalf of Purchaser.

The Escrow Agent

The law firm of Marans Weisz & Newman LLC, with an address at 29 Broadway, Suite 2400, New York, New York 10006, telephone number 212-968-0244, shall serve as escrow agent ("Escrow Agent") for Sponsor and Purchaser. Escrow Agent has designated the following attorneys to serve as signatories: Richard Marans, Daniel Weisz, Richard Newman, and Stavroula Tsolis. All designated signatories are admitted to practice law in the State of New York. Neither the Escrow Agent nor any authorized signatories on the account are the Sponsor, Selling Agent, Managing Agent, or any principal thereof, or have any beneficial interest in any of the foregoing.

The Escrow Account

The Escrow Agent has established the escrow account at Capital One Bank, N.A., 299 Park Avenue, New York, NY 10171, in the State of New York, a bank authorized to do business in the State of New York. The escrow account is The 37-14 34th Street Condominium Escrow Account ("Escrow Account"). The Escrow Account is federally insured by the FDIC at the maximum amount of $250,000 per deposit. Purchasers making Deposits in excess of $250,000 are advised that FDIC deposit insurance does not cover deposited monies in excess of this amount. Purchasers are also advised that if Purchasers have an account at the escrow bank, then the Purchaser's account balance factors into the $250,000 FDIC insurance limit. Before funds are transferred to any new escrow account, or if the escrow agent is replaced, the Offering Plan must be amended to provide the same full disclosure with respect to any new account, the escrow agent and the escrow agreement as was originally provided. A bond, letter of credit or other security may be substituted for any escrow account only after the Department of Law approves in writing the use of such alternate form of security.

All Deposits received from Purchaser shall be in the form of checks, money orders, wire transfers, or other instruments, and shall be made payable to or endorsed by the Purchaser to the order of Marans Weisz & Newman LLC, as Escrow Agent.

Any Deposits made for upgrades, extras, or custom work shall be initially deposited into the Escrow Account and released in accordance to the terms of the Purchase Agreement. Advances made for upgrades, extras, or custom work remains the Purchaser's money until used in commission of the requested work. If the Offering Plan is abandoned, all Purchase Agreements will be cancelled and all Deposits, including advances made for upgrades, extras, or custom work received in connection with the Purchase Agreement, together with any interest earned, will be refunded within five (5) business days after the amendment abandoning the Offering Plan has been accepted for filing.

The interest rate for all Deposits made into the Escrow Account shall be the prevailing rate for such accounts. Interest shall begin to accrue upon placing the Deposit into the Escrow Account. All interest earned thereon shall be paid to or credited to the Purchaser at closing. No fees of any kind may be deducted from the Escrow Account, and the Sponsor shall bear all costs associated with the maintenance of the Escrow Account.

Prior to release of the Deposit, Escrow Agent's fees and disbursements shall neither be paid by Sponsor from the Deposit nor deducted from the Deposit by any financial institution under any circumstance.

Sponsor agrees to defend, indemnify, and hold Escrow Agent harmless from and against all costs, claims, expenses and damages incurred in connection with or arising out of Escrow Agent's responsibilities arising in connection with this Purchase Agreement or the performance or non-performance of Escrow Agent's duties under this Purchase Agreement, except with respect to actions or omissions taken or suffered by Escrow Agent in bad faith or in willful disregard of the obligations set forth in this Purchase Agreement or involving gross negligence of Escrow Agent. This indemnity includes, without limitation, disbursements and attorneys' fees either paid to retain attorneys or representing the hourly billing rates with respect to legal services rendered by Escrow Agent to itself.

A complete copy of the Purchase Agreement is located in Part II of the Offering Plan. The relevant escrow trust fund provisions are included in Section 4 of the Purchase Agreement, which must be executed by the Escrow Agent.

Notification to Purchaser

Within five (5) business days after the Purchase Agreement has been tendered to Escrow Agent along with the Deposit, the Escrow Agent shall sign the Purchase Agreement and place the Deposit into the Escrow Account. Within ten (10) business days of placing the deposit in the Escrow Account, Escrow Agent shall provide written notice to Purchaser and Sponsor, confirming the Deposit. The notice shall provide the account number and the initial interest rate to be earned on the Deposit. Any Deposits made for upgrades, extras, or custom work shall be initially deposited into the Escrow Account, and released in accordance to the terms of the Purchase Agreement.

The Escrow Agent is obligated to send notice to the Purchaser once the Deposit is placed in the Escrow Account. If the Purchaser does not receive notice of such deposit within fifteen (15) business days after tender of the Deposit, Purchaser may cancel the Purchase Agreement within ninety (90) days after tender of the Purchase Agreement and Deposit to Escrow Agent. Complaints concerning the failure to honor such cancellation requests may be referred to the New York State Department of Law, Real Estate Finance Bureau, 28 Liberty Street, 21st Floor, New York, NY 10005. Rescission shall not be afforded where proof satisfactory to the Attorney General is submitted establishing that the Deposit was timely placed in the Escrow Account in accordance with the New York State Department of Law's regulations concerning Deposits and requisite notice was timely mailed to the Purchaser.

Before funds are transferred to any new escrow account, or if the escrow agent is replaced, the Offering Plan must be amended to provide the same full disclosure with respect to any new account, the escrow agent and the escrow agreement as was originally provided. A bond, letter of credit or other security may be substituted for any escrow account only after the Department of Law approves in writing the use of such alternate form of security.

Release of Funds

All Deposits, except for advances made for upgrades, extras, or custom work received in connection with the Purchase Agreement, are and shall continue to be the Purchaser's money, and may not be comingled with any other money or pledged or hypothecated by Sponsor, as per GBL

§ 352-h. Advances made for upgrades, extras, or custom work remains the Purchaser's money until used to execute the requested work. In the event a rescission right is exercised, all Deposits and advances not used to execute the requested work will be released in accordance with the terms of the Purchase Agreement. In the event the Offering Plan is abandoned, all Deposits and advances will be released in accordance with the terms of the Purchase Agreement

Under no circumstances shall Sponsor seek or accept release of the Deposit of a defaulting Purchaser until after consummation of the Offering Plan, as evidenced by the acceptance of a post-closing amendment by the New York State Department of Law. Consummation of the Offering Plan does not relieve the Sponsor of its obligations pursuant to GBL §§ 352-e(2-b) and 352-h.

The Escrow Agent shall release the Deposit if so directed:

(a) pursuant to terms and conditions set forth in the Purchase Agreement upon closing of title to the Unit; or

(b) in a subsequent writing signed by both Sponsor and Purchaser; or

(c) by a final, non-appealable order or judgment of a court.

If the Escrow Agent is not directed to release the Deposit pursuant to paragraphs (a) through (c) above, and the Escrow Agent receives a request by either party to release the Deposit, then the Escrow Agent must give both the Purchaser and Sponsor prior written notice of not fewer than thirty (30) days before releasing the Deposit. If the Escrow Agent has not received notice of objection to the release of the Deposit prior to the expiration of the thirty (30) day period, the Deposit shall be released, and the Escrow Agent shall provide further written notice to both parties informing them of said release. If the Escrow Agent receives a written notice from either party objecting to the release of the Deposit within said thirty (30) day period, the Escrow Agent shall continue to hold the Deposit until otherwise directed pursuant to paragraphs (a) through (c) above. Notwithstanding the foregoing, the Escrow Agent shall have the right at any time to deposit the Deposit contained in the Escrow Account with the Clerk of the County where the Unit is located and shall give written notice to both parties of such deposit.

The Sponsor shall not object to the release of the Deposit to:

(a) a Purchaser who timely rescinds in accordance with an offer of rescission contained in the Offering Plan or an Amendment to the Offering Plan; or

(b) all Purchasers after an Amendment abandoning the Offering Plan is accepted for filing by the Department of Law.

The Department of Law may perform random reviews and audits of any records involving the Escrow Account to determine compliance with all applicable statutes and regulations. The Escrow Agent shall maintain all records concerning any escrow account for seven years after release of the funds. Upon the dissolution of any law firm which was the Escrow Agent, the former partners or members of the firm shall make appropriate arrangements for the maintenance of these records by one of them or by the successor firm and shall notify the Department of Law of such

transfer.

Waiver Void

Any provision in the Purchase Agreement or separate agreement, whether oral or in writing, by which a Purchaser purports to waive or indemnify any obligation of the Escrow Agent holding any Deposit in trust is absolutely void. The provisions of the Attorney General's regulations and GBL §§ 352-e(2-b) and 352-h concerning escrow trust funds shall prevail over any conflicting or inconsistent provisions in the Purchase Agreement, Plan, or any amendment thereto. However, this shall only apply to initial Purchasers who purchase their Unit from Sponsor.

Trust Obligation of Sponsor

Nothing contained herein shall diminish or impair the Sponsor's statutory obligation to each Purchaser pursuant to GBL §352-h to hold in trust all deposits, advances or payments made in connection with the offer until consummation of the transaction with such Purchaser. Consummation of the Offering Plan does not relieve Sponsor of its obligations pursuant to GBL §352-h. Funds from any escrow account remain the property of the Purchaser until employed in connection with the consummation of the transaction. Such funds shall not be a part of the estate of the Sponsor or the escrow agent upon any bankruptcy, incapacity or death.

Lawsuits

Any lawsuit arising out of the Purchase Agreement shall be governed by the internal laws of the State of New York, shall be brought in county where the Building is located and shall be determined by the judge presiding at the trial without a jury (which the parties waive).

Risk of Loss and Restoration after Casualty

The risk of loss to the Unit by fire or other casualty, until the earlier of closing of title or the taking of possession of the Unit by Purchaser, is assumed by Sponsor; provided that Sponsor shall have no obligation or liability to repair or restore the Unit. The risk of loss is assumed by a Purchaser who has taken possession of the Unit prior to closing, e.g. via an Interim Lease, to the extent that such loss is not covered by the Condominium’s or Sponsor’s insurance.

In the event of damage or destruction of the Unit, due to fire or other casualty, prior to the closing of title, and the election by Sponsor to repair or restore the Unit to its original condition immediately prior to the fire or other casualty, the Purchase Agreement shall continue in full force and effect, Purchaser shall not have the right to reject title or receive a credit against, or abatement in, the Purchase Price, and Sponsor shall be entitled to a reasonable period of time within which to complete the repair or restoration. Any proceeds received from insurance or in satisfaction of any claim or action in connection with such loss shall, subject to the rights of the Board of Managers and other Unit Owners if the Declaration has theretofore been recorded and any mortgagee of Sponsor, belong entirely to Sponsor and if such proceeds are paid to Purchaser, Purchaser shall promptly upon receipt thereof turn them over to Sponsor. As Sponsor has a reasonable period of time to restore a Unit after the occurrence of a casualty if it elects to do so, and the time period that would be considered reasonable will depend on the nature of the casualty,

the financing commitment of a Purchaser who is dependent on financing to pay the balance of the purchase price may expire prior to the restoration of the Unit, and such Purchaser could lose their Deposit if the Purchaser is not able to extend the term of the commitment to accommodate the restoration period.

In the event of damage to or destruction of the Unit by fire or other casualty prior to the closing of title and the election by Sponsor not to repair or restore the Unit, or, if the Declaration has been recorded prior thereto, then if the Unit Owners do not resolve to make such repairs or restoration pursuant to the By-Laws, the Purchase Agreement shall be deemed cancelled and of no further force or effect and Sponsor shall return to Purchaser all sums deposited by Purchaser hereunder within thirty (30) days of making the election, together with interest, if any, earned thereon, and neither party shall have any further rights, obligations or liability to or against the other and the parties shall be released and discharged from all obligations and liability hereunder and under the Offering Plan, except that if Purchaser is then in default hereunder (beyond the applicable grace period, if any), Sponsor shall retain all such sums deposited by Purchaser hereunder and any interest earned thereon, as and for liquidated damages. Sponsor shall provide written notice to the Purchaser within sixty (60) days of the damage to the Unit whether or not Sponsor shall elect to repair or restore the Unit.

Lien Law

Section 71-a(3) of the Lien Law provides protections for Purchasers where the contract of sale by its terms provides for or is incidental to a contract providing for the construction of the subject building, or where a Deposit pursuant to a contract of sale is not deposited or kept in an escrow account as mandated by law. Sponsor will not use any Deposit towards the construction of the Building and will deposit and maintain all Deposits in the Escrow Account as described above in this Procedure to Purchase section, and therefore be in compliance with Section 71a(3) of the Lien Law and any other provision of law applicable to Purchasers' Deposits.

Delay in First Closing

Sponsor anticipates that the first closing of a Unit will occur by October 1, 2020. Purchasers will be offered a right of rescission if: (i) the actual date of closing of title to the first Residential Unit; or (ii) the projected date of closing of title to the first Residential Unit occurs later than October 1, 2021, twelve (12) months after the projected date for the first closing. If the Offering Plan is amended to provide for a later projected date for the first closing, purchasers will be entitled to an offer of rescission if the first closing occurs more than twelve (12) months beyond that amended, later date. Purchasers should note that even if the first closing occurs on or before October 1, 2020 (or such other date projected as the date of commencement of the operation at the time the purchase agreement was entered into) or within the twelve month period thereafter, the closing of subsequent units may be substantially delayed beyond such dates if a TCO has not been issued for such units or for the floor on which such units are located. In such case, provided that Sponsor is diligently pursing completion of construction and the issuance of a Certificate of Occupancy and is otherwise in compliance with its obligations under the Offering Plan, Purchaser will not be entitled to a right of rescission or to make claims against Sponsor for damages or losses as a result of such delays and will not be excused from paying the full purchase price for the Unit. PROSPECTIVE PURCHASERS SHOULD THEREFORE CAREFULLY CONSIDER THE

POSSIBILITY OF SUCH DELAYS IN THEIR DETERMINATION AS TO WHETHER TO PURCHASE A UNIT.

The First Year of Operations is estimated to be October 1, 2020 through September 30, 2021. As in any construction project, given the vagaries of the construction process, it is difficult to predict with precision the date Sponsor will first be able to close title to the Residential Units. Accordingly, it is a special risk of this Offering Plan that the First Closing may occur sooner or later than the projected First Year of Operations and closings to certain Residential Units may occur substantially before or after closing for other Residential Units.

FinCEN Geographic Targeting Order

Pursuant to the Geographic Targeting Order issued by the Director of the Financial Crimes Enforcement Network, title companies are now required to collect and report information regarding purchasers in transactions where: (1) the purchaser is a legal entity as defined in the Geographic Targeting Order; (2) the purchaser purchases residential real property located in the Boroughs of Brooklyn, Queens, Bronx, Manhattan and Staten Island; (3) the total purchase price is in excess of Three Hundred Thousand Dollars ($300,000.00); (4) such purchase is made without a bank loan or other similar form of external financing; and (5) the purchase is made, at least in part, using currency or a cashier's check, a certified check, a traveler's check, a personal check, a business check, or a money order in any form, a funds transfer, or virtual currency. This affects all residential real property closings meeting the above criteria and occurring on or after May 16, 2019 for so long as the Order remains in effect. The Order expires on November 11, 2019 and is expected to be renewed on similar terms upon expiration. A copy of the Order is available here:

https://www.fincen.gov/sites/default/files/shared/Real%20Estate%20GTO%20GENERIC_111518_FINAL.pdf

Any conflict between the Offering Plan and the Purchase Agreement will be resolved according to the terms of the Offering Plan. However, this shall only apply to initial Purchasers who purchase their Unit from Sponsor.

ASSIGNMENT OF PURCHASE AGREEMENTS

Purchaser may not assign the Purchase Agreement without first obtaining the prior written consent of Sponsor, which consent may be granted or withheld in Sponsor's sole and absolute discretion. If a Purchaser desires to assign its rights under the Agreement or to take title in the name of an affiliate of, or entity related to, or controlled by Purchaser that differs from that reflected in the Agreement, or to add, delete or substitute the name of a member of the Purchaser's family, then, if such assignment, alteration, addition, deletion or substitution is permitted by Sponsor (in Sponsor's sole discretion), Purchaser shall deliver to Selling Agent or Sponsor's counsel, four (4) signed forms of assignment of this Agreement (to be prepared by Sponsor's counsel at Purchaser's expense and in form and content acceptable to Sponsor, in its sole discretion), as well as three (3) completed and signed copies of either Form W-9 (Request for Taxpayer Identification Number and Certification) or Form W-8BEN (Certificate of Foreign Status of Beneficial Owner for United States Tax Withholding), as applicable, in the form required by law. Upon each assignment or other change permitted by Sponsor (it its sole discretion), the assignments and Form W-8 or Form W-9, as applicable, must be delivered to Selling Agent or Sponsor's counsel, together with a personal certified check, or an official bank or cashier's check, in the amount of $1,000.00 made payable to Marans Weisz & Newman LLC (for services rendered in connection with the assignment), not less than twenty (20) days prior to the date scheduled for the Purchaser's Closing. In no event shall Purchaser or its assignee (or any added or substituted party) have any right to adjourn or postpone the Closing as a result of any such change or assignment. Sponsor is not obligated to consent to any such change or assignment and, Sponsor's refusal to consent to an assignment or change in name will not entitle Purchaser to terminate the Purchase Agreement or excuse Purchaser from any of its obligations under the Purchase Agreement or give rise to any claim for damages against Sponsor. Any purported assignment by Purchaser in violation of this Section shall be a default by Purchaser; entitling Sponsor to the default remedies set forth in the section of the Offering Plan "Procedure to Purchase," and shall be voidable at the option of Sponsor.

Notwithstanding the provision above, Sponsor will not unreasonably withhold its consent to the assignment by Purchaser, on one (1) occasion only, of all of Purchaser's rights under the Purchase Agreement to a "Purchaser Affiliate" or to member(s) of Purchaser's "Immediate Family Members", provided that any such assignment is made without consideration and otherwise in accordance with the provisions and procedures set forth in herein. For purposes of this provision: (i) "Purchaser Affiliate" means an entity, as of the date of the assignment and at all times thereafter through and including the Closing is controlled by or under common control with Purchaser; (ii) "Immediate Family Members" means Purchaser's spouse, domestic partner, children, grandchildren, parent, grandparent, brothers or sisters, stepchildren and/or stepparent; and (iii) "control" means the ownership of fifty-one percent (51%) or more of the interests in such entity and possession of the power to direct the management and policies of such entity and the distribution of its profits.

The Sponsor and its agents will not discriminate against any person on the basis of race, creed, color, national origin, sex, age, disability, marital status or other grounds prohibited by law.

EFFECTIVE DATE

Sponsor's offer to sell the Units is contingent upon the Offering Plan being declared effective and compliance with the relevant conditions and time periods set forth in the Offering Plan.

The Offering Plan may be declared effective by (i) an amendment to the Offering Plan or (ii) by personal service of notice on every Purchaser or by commencement of service by mail in the manner required by 13 NYCRR Section 20.1 (d) stating that the Offering Plan is declared effective and submitting an amendment conforming to Section 20.5 (e) to the Department of Law within five (5) days confirming that the Offering Plan was declared effective on a specified date. Closing of the first Unit shall not occur until the Offering Plan is declared effective and the amendment declaring the Offering Plan effective is accepted for filing by the Department of Law.

The Offering Plan may not be declared effective until bona fide Purchasers, including investors, have signed Purchase Agreements for at least fifteen percent (15%) of the Residential Units offered under the Offering Plan. Twelve (12) Residential Units satisfy the fifteen percent (15%) threshold.

The Offering Plan will not be declared effective based on (i) Purchase Agreements signed by Purchasers who have been granted a right of rescission that has not yet expired or been waived; or (ii) Purchase Agreements where the Purchaser was not afforded the seven (7) days period to rescind the Purchase Agreement or the three (3) business day period to review the Offering Plan and all filed amendments in accordance with the provisions set forth above in the section of the Offering Plan "Procedure to Purchase;" or (iii) Purchase Agreements with any Purchaser who is the Sponsor, the selling agent, the managing agent or is a principal of the Sponsor, the selling agent, the managing agent or is related to the Sponsor, the selling agent, the managing agent or to any principal of the Sponsor or the managing agent by blood, marriage or adoption or as a business associate, an employee, a member, a shareholder or a limited partner; except that such a Purchaser other than the Sponsor or a principal of the Sponsor may be included if the Sponsor has submitted proof satisfactory to the Department of Law establishing that the Purchaser is bona fide.

The Offering Plan must be declared effective when Purchase Agreements are executed and accepted by Sponsor for eighty percent (80%) or more of the Units offered under the Offering Plan. Sixty-Two (62) Units meets or exceeds the eighty percent (80%) threshold.

Notwithstanding the fact that not all Purchasers used for purposes of declaring the Offering Plan effective may actually close, Sponsor will re-declare the Offering Plan effective if all Purchase Agreements are either rescinded or terminated prior to the date of the First Closing, regardless of whether the Declaration has been recorded.

The Purchase Agreement is contingent upon the Offering Plan being declared effective. If the Offering Plan is abandoned, Purchase Agreements will be terminated, and all monies held by Sponsor, including advances made for upgrades, extras, or custom work, shall be returned to Purchasers and neither party shall have any further rights or obligations arising thereunder or relating thereto.

The Offering Plan may be abandoned by Sponsor, at its sole option, at any time before it is declared effective. If the Offering Plan is to be abandoned after filing and the Sponsor has accepted Purchase Agreements, the Sponsor shall promptly submit an amendment to the Department of Law together with form RS-3 as promulgated by the Department of Law. If payments under Purchase Agreements have been received, the amount of such funds shall be returned to the Purchasers by the Escrow Agent within five (5) business days after the amendment abandoning the Offering Plan has been accepted for filing. If there are no outstanding Purchase Agreements, the Sponsor need not submit an amendment but shall submit a form RS-3 to the Department of Law.

Once the Offering Plan has been declared effective or executed Purchase Agreements for eighty percent (80%) of the Units have been executed and accepted by Sponsor, the Offering Plan may not be abandoned unless one of the following events occur:

(i) There is a title defect which cannot be cured without litigation or cannot be cured for less than a stated amount which shall not be less than one-half (1/2) of one percent (1%) of the total offering amount;

(ii) Substantial damage or destruction of the Building by fire or other casualty which cannot be cured for less than a stated amount which shall not be less than one-half (1/2) of one percent (1%) of the total offering amount; or

(iii) The taking of any material portion of the Property by condemnation or eminent domain. In calculating such amount Sponsor shall not include attorney's fees or title defects or determinations of any authority or regulatory association existing on the date of presentation of the Offering Plan and are either known to the Sponsor or are a matter of public record.

TERMS OF SALE

The terms "Closing of Title" or "Closing" as used herein means the transfer of ownership of a Condominium Unit from Sponsor to the Purchaser(s) thereof.

The Purchase Agreement is contingent upon the Offering Plan being declared effective. If the Offering Plan is abandoned, Purchase Agreements will be terminated, and all monies held by Sponsor, including advances made for upgrades, extras, or custom work, shall be returned to Purchasers and neither party shall have any further rights or obligations arising thereunder or relating thereto.

Once the Offering Plan has been declared effective, the Sponsor will fix the dates for closing title to all Units for which Purchase Agreements have been executed by serving notice on each Purchaser stating the date of the First Closing and setting such Purchaser's Closing Date. Such notice will be served no less than thirty (30) days before the date set for the Closing of each Unit.

At Closing, Sponsor will execute and deliver to each Purchaser a bargain and sale deed with covenant against grantor's acts substantially in the form set forth in Part II of the Offering Plan and in proper form for recording. Each Unit and its appurtenant Common Interest will be conveyed free and clear of all liens, encumbrances and title exceptions other than those described below and the proposed Unit Deed contained in Part II of the Offering Plan.

Permitted Exceptions

Title to each Unit will be subject to the following exceptions (the "Permitted Exceptions"):

1. Rights of tenants or persons in possession, if any;

2. Standard exceptions contained in the title report;

3. Taxes, tax liens, tax sales, water rates, sewer rents and assessments set forth herein.

4. The following form title exceptions:

   AS TO THE BUILDING: Any statement of facts which a subsequent survey of would disclose provided that such additional statement of facts do not render title unmarketable;

   AS TO THE UNIT: With respect to Condominium Unit No. ___ the title to which is to be insured herein, policy excepts any state of facts which an accurate survey would disclose. Policy insures, however, that any encroachment of the Unit onto other Units or onto any part of the common elements may remain undisturbed as long as the Unit insured hereunder exists.

5. Covenants, conditions, easements, leases, agreements of record, etc., more fully

set forth herein:

A. None.

6. Each Unit will be split and released from the following Mortgages that encumber the Property:

Between 3714 LIC DEVELOPMENT LLC as Mortgagor and Whitehorse Onshore Credit Opportunities I, LLC, H.I.G. Whitehorse Trinity Credit, LLC, BOF Holdings, IV, LLC, and H.I.G. Global Credit Holdings, LLC as Mortgagee dated 5/10/2018 and recorded 5/23/2018 in CRFN 2018000173331 in the amount of $11,421,962.

7. The following collateral Assignments of Leases and Rents affect the property:

Between 3714 LIC DEVELOPMENT LLC and Whitehorse Onshore Credit Opportunities I, LLC, H.I.G. Whitehorse Trinity Credit, LLC, BOF Holdings, IV, LLC, and H.I.G. Global Credit Holdings, LLC dated 5/10/2018 and recorded 5/23/2018 in CRFN 2018000173332 in the amount of $11,421,962.

8. The following UCC-1 Financing Statements affect the property:

Between 3714 LIC DEVELOPMENT LLC and Whitehorse Onshore Credit Opportunities I, LLC, H.I.G. Whitehorse Trinity Credit, LLC, BOF Holdings, IV, LLC, and H.I.G. Global Credit Holdings, LLC dated 5/10/2018 and recorded 5/23/2018 in CRFN 2018000173333.

Purchasers are urged to review the title report they receive prior to Closing with their attorney to properly understand all exceptions to title that may be included in such report.

A Closing will take place only after the issuance of a temporary or final Certificate of Occupancy for the entire project or, issuance of a partial, temporary or final Certificate of Occupancy for the Unit closed or the building in which the Unit is located

At least one week (but not more than one month) prior to the Closing, Purchasers shall be given an opportunity to inspect the Unit prior to Closing. Punchlist items to be completed in the Unit pursuant to the Offering Plan and/or the Purchase Agreement shall be itemized on an "Inspection Statement," a form of which is contained in Part II of the Offering Plan, signed by both Sponsor and Purchaser. The Inspection Statement merely serves to identify and memorialize any conditions the Purchaser believes to be material. Sponsor's refusal to sign the Inspection Statement due to a disagreement with the items on the Inspection Statement shall not be grounds to cancel or postpone the Closing, unless otherwise entitled under applicable law. Nevertheless, Sponsor has the absolute obligation to design and build in accordance with applicable law, codes, regulations, filed plans and specifications, and locally accepted building practices for items which are not covered by codes, and otherwise fulfill its obligations under the Offering Plan or Purchase Agreement; Purchasers may have a claim under a breach of contract theory in the event Sponsor

does not fulfill their obligations under the Offering Plan or Purchase Agreement.

Sponsor shall be obligated to complete the items agreed to on the Inspection Statement within a reasonable time after Closing. However, if Sponsor agrees in writing to complete any items on the Inspection Statement prior to Closing, Purchaser must re-inspect the Unit on the day prior to Closing to inspect and sign off on all items Sponsor agreed to complete. No open items of work will be discussed at the Closing itself. With the exception of items Sponsor agrees in writing to complete prior to the Closing, Sponsor's failure to complete any of the items listed on the Inspection Statement shall not be grounds to cancel or postpone the Closing, unless otherwise entitled under applicable law.

Notwithstanding anything to the contrary set forth above, neither Sponsor nor its principals, managers, members, agents, designees, employees or affiliates assumes any responsibility and will not be liable to repair or replace any of the following immaterial conditions:

- any condition resulting from normal wear and tear or natural deterioration from the normal movement, settlement and shrinkage or expansion of the residential units or the Building generally and/or building materials;
- partial or total death of any trees, shrubs, bushes or other landscape improvements, protruding dry wall fastenings, ridging on gypsum board, lumber or minor floor shrinkage or gapping, door or window sticking due to weather, door warpage including, without limitation, warpage of any doors, minor scratches or chips in plastic, glass, metal, wood, vitreous china, stainless steel, tile porcelain or stone surfaces, bathroom finish, cracked grouting, adjustment or bi-fold door, walls not square, electrical plates or signs not straight, slight discoloration, expansion or shrinkage, slight separation between base and floor or differing coloration of any and all concrete, ceramic or stone tiles in gardens or kitchens;
- normal settlement and deflection or any minor consequential damage resulting therefrom including, without limitation, cracks in roof ballast or concrete cracks which do not reduce the structural integrity of the building generally;
- non-material deviations in the level of ceilings and non-material imperfections in ceiling finishes;
- non-material imperfections in painting finishes including, but not limited to, variances in color or texture;
- non-material deviations in the floors' levelness, buckling, gapping or sinking due to expansion and/ or shrinkage and/ or movement;
- slight misalignment of bathroom finishes and minor variation in grouting or tile thickness;
- minor noise, vibrations or odors from normal plumbing, heating, ventilation, air-conditioning and elevator operation, including boilers, condensing units, exhaust fans, elevator machine rooms and equipment;

- potential bathroom vents and ducts on the mechanical terraces, regardless of height, and any noise emanating from such vents and ducts shall be in accordance with permissible decibel levels pursuant to any rules and/or regulations governing noise levels in New York City;
- negligible floor noises and creaking;
- minor carpet or floor discoloring or stretching;
- non-material variations in width, length, thickness, finish, gaps or color range of wood flooring;
- minor chips, scratches, mars, breaks, dents, cracks, imperfections, or other immaterial conditions in each of the following: windows, window glass, frames and hardware; sliding glass doors, frames, door glass and hardware; louvers; shower doors; lighting fixtures, lenses, baffles and globes; all painted surfaces; all sinks, tubs, basins, water closets; kitchen cabinets, backsplashes and countertops; vanity tops and cabinets; all tile, stone or marble floors; saddles, all appliances; woodwork, millwork and doors; mirrors; all hardware; appliance cabinets; ceilings and flooring;
- after the closing of title to a unit, paint touch ups, repair dented appliances or replace light bulbs;
- non-material variations in tone or color of marble or stone or slight floors; saddles, all appliances; woodwork, millwork and doors; mirrors; all hardware appliance; appliance cabinets; ceilings and flooring;
- leaching or minor color variation in exterior color mortar and colored stone or brick, slight dimensional variations in brick joints, and mortar dropping on bricks and window surfaces;
- minor ponding and/or controlled drainage on terraces or balcony surfaces;
- television, radio or other telecommunications reception;
- slight discoloration to hardware or plumbing finishes;
- minor stains, runs, lumps, shags or imperfections in weave and fabric panels;
- terrace tile or pavers not laid flat, or slight color variation in tiles, pavers or mortar, or stained tiles or pavers;
- non-material scratches on window frames or glass;
- any other minor imperfection or immaterial condition, except as expressly warranted pursuant to this Offering Plan, provided it is indicated on written inspection statement and delivered to and acknowledge by Sponsor.

Notwithstanding the foregoing, in the event that Purchaser or Unit Owner, as the case may be, makes any alterations to the Unit after taking possession, then the warranties Sponsor has provided in accordance with the terms of the Offering Plan or any repairs Sponsor has agreed to make in accordance with the terms of a signed inspection statement shall be void and of no further

force or effect.

All personal property located within the Unit on the date the Purchase Agreement is signed or located within the Common Elements on the date the Declaration is filed that is owned by Sponsor is included in the conveyance unless specifically excepted in the Offering Plan.

The Declaration, By-Laws and Floor Plans for the Condominium and such other documents, as required by law, will be recorded or filed (as the case may be) in the New York City Register prior to the first conveyance of title to a Unit in accordance with the New York Condominium Act and any other applicable State and local law.

In the event the Closing does not take place on the Closing Date, through no fault of Sponsor and provided further that Sponsor is ready, willing and able to close on the Closing Date, (i) the apportionment of those items set forth in the Purchase Agreement shall be made as of the originally established Closing Date rather than as of the date the Closing actually occurs, (ii) Purchaser shall pay Sponsor, at Closing, interest on the unpaid balance of the purchase price for each day starting from (and including) the originally scheduled Closing Date to (and including) the day before the actual Closing Date, where interest shall be equal to the highest legal rate as of the Closing Date (the current rate is 16% per annum); and (iii) Purchaser shall pay Sponsor's counsel $500.00 for each adjournment requested or caused by Purchaser or Purchaser's lender. Nothing herein shall be construed to mean that the Sponsor must grant an adjournment of title when requested to do so. If at a Purchaser's request Sponsor grants an adjournment or adjournments of their closing of title in excess of five (5) days in the aggregate, the Sponsor has the option of collecting an additional five percent (5%) of the purchase price of the Unit as an additional Deposit.

In the event of a default by Purchaser in Purchaser's obligations under the Purchase Agreement, not cured within any applicable grace period, the Deposit and any interest thereon may be retained by Sponsor as liquidated damages. Sponsor must make a written demand for payment after default at least 30 days before forfeiture of the deposit may be declared.

Sponsor is transferring its statutory obligation, to pay New York City Real Property Transfer Taxes and New York State Real Estate Transfer Taxes, to Purchaser. Purchasers will be required to pay all transfer taxes due at Closing and comply with the requirements of the New York State Department of Taxation and Finance. Purchaser shall pay the Real Estate Transfer Tax due to the State of New York (the so-called "deed stamps" and, if applicable, the so-called "mansion tax"), the Real Property Transfer Tax due to the City of New York and any other real property transfer tax due to the City or State of New York. Purchaser agrees to indemnify and hold Sponsor harmless from and against any and all liabilities and expenses (including, without limitation, reasonable legal fees and disbursements) incurred by Sponsor by reason of the non-payment by Purchaser of any of the taxes Purchaser is obligated to pay hereunder in connection with the purchase of the Unit. Purchaser's obligations to pay the taxes and to indemnify Sponsor as shall survive the closing of title.

Purchasers shall be responsible for the payment at closing of all New York City Real Property Transfer Tax and New York State Real Estate Transfer Tax. Transfer taxes are computed using the purchase price for units purchased and fees paid by Purchaser for Sponsor's attorney (the "Consideration"). The New York City Real Property Transfer Tax (the "RPT") for the purchase of a single residential unit is currently one percent (1%) of the Consideration if such Consideration

is $500,000.00 or less, and 1.425% if such Consideration is over $500,000.00. The New York State Real Estate Transfer Tax (the "NYS Tax") for the purchase of a single residential unit under $3,000,000 is currently $2.00 for every $500.00 or part thereof (.4%) of the Consideration. The New York State Real Estate Transfer Tax (the "NYS Tax") for the purchase of a single residential unit over $3,000,000 is currently $3.25 for every $500.00 or part thereof (.65%) of the Consideration. For purposes of calculating the taxes payable, the amounts of such taxes will be included in the Consideration subject to such tax. In order to compute the transfer taxes payable:

(i) Add the rates for RPT and NYS Tax. The result will be "Total Tax Rate"
(ii) Divide Consideration by 1 minus Total Tax Rate. The result will be "Total Consideration"
(iii) To compute RPT due, multiply Total Consideration by the RPT rate
(iv) To compute NYS Tax due, multiply Total Consideration by NYS Tax rate

At Closing, each Purchaser will execute a Power of Attorney in the form provided in Part II of the Offering Plan (and deliver said instrument to the Sponsor or Purchaser's title company for recording), designating the Board of Managers as their Attorney in fact, coupled with an interest for, but not limited to, the purpose of managing, selling, mortgaging, leasing, voting or otherwise dealing with any Unit acquired by the Board of Managers in accordance with any of the provisions of the By-Laws and for purposes consistent with the implementation of the Offering Plan. The execution of a Power of Attorney is required to effectuate the Closing. The failure of Purchaser to execute a Power of Attorney at Closing shall constitute a default under the Purchase Agreement.

Sponsor has obtained financing from Whitehorse Onshore Credit Opportunities I, LLC, H.I.G. Whitehorse Trinity Credit, LLC, BOF Holdings, IV, LLC, and H.I.G. Global Credit Holdings, LLC, located at 600 Fifth Avenue, 23rd Floor, New York, NY 10020. The liens held by the Lender shall be subordinate to the Declaration. Each Unit being conveyed at a Closing and such Unit's appurtenant Common Interest will be released from the Lender's mortgage upon tender of the relevant payment as agreed to between Sponsor and Lender. Lender requires a minimum of fifteen (15) Residential Units be sold prior to declaring the Offering Plan effective.

If ordered by Purchaser, the issuance at Closing of a commitment by a title insurance company licensed to do business in the State of New York, will insure that the Condominium was validly formed pursuant to the Condominium Act and that the Purchaser has good and insurable fee title in the Unit, free and clear of all liens and encumbrances, except as set forth herein and except for any mortgage that a Purchaser obtains to purchase the Unit, and subject to the provisions of the Declaration and By-Laws. See the next section of this Offering Plan for the estimated cost of such title insurance.

Risk of Loss and Restoration after Casualty

The risk of loss to the Unit by fire or other casualty, until the earlier of closing of title or the taking of possession of the Unit by Purchaser, is assumed by Sponsor; provided that Sponsor shall have no obligation or liability to repair or restore the Unit. The risk of loss is assumed by a Purchaser who has taken possession of the Unit prior to closing, e.g. via an Interim Lease, to the extent that such loss is not covered by the Condominium's or Sponsor's insurance.

In the event of damage or destruction of the Unit, due to fire or other casualty, prior to the closing of title, and the election by Sponsor to repair or restore the Unit to its original condition immediately prior to the fire or other casualty, the Purchase Agreement shall continue in full force and effect, Purchaser shall not have the right to reject title or receive a credit against, or abatement in, the Purchase Price, and Sponsor shall be entitled to a reasonable period of time within which to complete the repair or restoration. Any proceeds received from insurance or in satisfaction of any claim or action in connection with such loss shall, subject to the rights of the Board of Managers and other Unit Owners if the Declaration has theretofore been recorded and any mortgagee of Sponsor, belong entirely to Sponsor and if such proceeds are paid to Purchaser, Purchaser shall promptly upon receipt thereof turn them over to Sponsor. As Sponsor has a reasonable period of time to restore a Unit after the occurrence of a casualty if it elects to do so, and the time period that would be considered reasonable will depend on the nature of the casualty, the financing commitment of a Purchaser who is dependent on financing to pay the balance of the purchase price may expire prior to the restoration of the Unit, and such Purchaser could lose their Deposit if the Purchaser is not able to extend the term of the commitment to accommodate the restoration period.

In the event of damage to or destruction of the Unit by fire or other casualty prior to the closing of title and the election by Sponsor not to repair or restore the Unit, or, if the Declaration has been recorded prior thereto, then if the Unit Owners do not resolve to make such repairs or restoration pursuant to the By-Laws, the Purchase Agreement shall be deemed cancelled and of no further force or effect and Sponsor shall return to Purchaser all sums deposited by Purchaser hereunder within thirty (30) days of making the election, together with interest, if any, earned thereon, and neither party shall have any further rights, obligations or liability to or against the other and the parties shall be released and discharged from all obligations and liability hereunder and under the Offering Plan, except that if Purchaser is then in default hereunder (beyond the applicable grace period, if any), Sponsor shall retain all such sums deposited by Purchaser hereunder and any interest earned thereon, as and for liquidated damages. Sponsor shall provide written notice to the Purchaser within sixty (60) days of the damage to the Unit whether or not Sponsor shall elect to repair or restore the Unit.

UNIT CLOSING COSTS AND ADJUSTMENTS

At Closing, each Purchaser shall be required to pay certain costs and expenses. The following is a list of the types and amounts of costs and expenses Purchasers should expect to pay.

Title Insurance

If a Purchaser elects to obtain fee title insurance, the Purchaser will pay the premium therefor which will vary depending upon the purchase price and whether or not a mortgage title policy is obtained simultaneously with the fee title policy. Title insurance rates are set by the New York Board of Title Underwriters and filed with the New York State Insurance Department. The Purchaser is free to obtain title insurance from any company of their choice without incurring a penalty.

The current rate for fee title insurance alone for a Unit (i.e., no mortgage title insurance) is pursuant to the rate schedule applicable to new condominium projects filed with the New York State Department of Insurance, which is the Zone 2 Basic Rate for Owner's Policies:

The Owner's Policy Basic Rate is $402.00 for the first $35,000.00 of fee insurance and $344 for the first $35,000.00 of the loan policy. Premiums then increase as follows:

Fee Amount	Owners Premium	Loan Premium
$35,001 – $50,000	$6.67/$1,000	$5.55/$1,000
$50,001 – $100,000	$5.43/$1,000	$4.54/$1,000
$100,001 – $500,000	$4.36/$1,000	$3.64/$1,000
$500,001 – $1,000,000	$3.98/$1,000	$3.31/$1,000
$1,000,001 – $5,000,000	$3.66/$1,000	$3.05/$1,000
$5,000,001 – $10,000,001	$3.25/$1,000	$2.71/$1,000
$10,000,001 – $15,000,000	$3.07/$1,000	$2.55/$1,000
$15,000,001 – up	$2.76/$1,000	$2.31/$1,000

If a Purchaser elects to obtain mortgage title insurance simultaneously with a policy for fee title insurance, the premium for the mortgage policy will be at "Simultaneous Rate". The premium on the amount of the loan policy that does not exceed the fee policy is calculated at 30 percent (30%).

Purchasers are free to use the title company of their choice at no additional cost. Cornerstone Land Abstract, LLC at 248-52 Jericho turnpike, Bellerose Village, NY 11001, has updated the title search and submitted the title report to the Attorney General of the State of New York with respect to this Offering Plan. There is no relation between the principals of Cornerstone Land Abstract, LLC and the Sponsor or Attorney for the Sponsor.

Transfer Taxes and Recording Fees

Fees for recording the Unit Deed, the Power of Attorney in favor of the Board of Managers and any mortgage the Purchaser obtains to finance the purchase of their Unit are stated in this section. The current recording fees of $42.00 for each instrument including the first page, plus

$5.00 per each additional page including cover sheets, a filing fee of $125.00 for the accompanying RP5217NYC form, and any service fees charged by Purchaser's title insurance company in connection with such recordings and filings shall be payable by Purchaser.

Sponsor is transferring its statutory obligation, to pay New York City Real Property Transfer Taxes and New York State Real Estate Transfer Taxes, to Purchaser. Purchasers will be required to pay all transfer taxes due at Closing and comply with the requirements of the New York State Department of Taxation and Finance. Purchaser shall pay the Real Estate Transfer Tax due to the State of New York (the so-called "deed stamps" and, if applicable, the so-called "mansion tax", the Real Property Transfer Tax due to the City of New York and any other real property transfer tax due to the City or State of New York. Purchaser agrees to indemnify and hold Sponsor harmless from and against any and all liabilities and expenses (including, without limitation, reasonable legal fees and disbursements) incurred by Sponsor by reason of the non-payment by Purchaser of any of the taxes Purchaser is obligated to pay hereunder in connection with the purchase of the Unit. Purchaser's obligations to pay the taxes and to indemnify Sponsor as shall survive the closing of title.

Purchasers shall be responsible for the payment at closing of all New York City Real Property Transfer Tax and New York State Real Estate Transfer Tax. Transfer taxes are computed using the purchase price for units purchased and fees paid by Purchaser for Sponsor's attorney (the "Consideration"). The New York City Real Property Transfer Tax (the "RPT") for the purchase of a single residential unit is currently one percent (1%) of the Consideration if such Consideration is $500,000.00 or less, and 1.425% if such Consideration is over $500,000.00. The New York State Real Estate Transfer Tax (the "NYS Tax") for the purchase of a single residential unit under $3,000,000 is currently $2.00 for every $500.00 or part thereof (.4%) of the Consideration. The New York State Real Estate Transfer Tax (the "NYS Tax") for the purchase of a single residential unit over $3,000,000 is currently $3.25 for every $500.00 or part thereof (.65%) of the Consideration. For purposes of calculating the taxes payable, the amounts of such taxes will be included in the Consideration subject to such tax. In order to compute the transfer taxes payable:

(i) Add the rates for RPT and NYS Tax. The result will be "Total Tax Rate"
(ii) Divide Consideration by 1 minus Total Tax Rate. The result will be "Total Consideration"
(iii) To compute RPT due, multiply Total Consideration by the RPT rate
(iv) To compute NYS Tax due, multiply Total Consideration by NYS Tax rate

Mansion Tax

Purchasers are advised that New York State imposes an additional transfer tax upon Purchasers where the consideration for the Unit is $1,000,000 or more (the "Mansion Tax"). Purchasers of Units where the consideration (including the purchase price itself plus the aggregate Transfer Taxes payable by Purchaser) is $1,000,000 or more thus will be obligated to pay the Mansion Tax at closing. Sponsor makes no representation regarding the calculation of the Mansion Tax or of the "consideration" upon which the New York State taxing authorities may base the Mansion Tax and shall have no liability with respect thereto. Purchasers should consult with their own counsel and/or tax advisors. The rates for the Mansion Tax are as follows:

$1,000,000 - $1,999,999	1.00%
$2,000,000 - $2,999,999	1.25%
$3,000,000 - $4,999,999	1.50%
$5,000,000 - $9,999,999	2.25%
$10,000,000 - $14,999,999	3.25%
$15,000,000 - $19,999,999	3.50%
$20,000,000 - $24,999,999	3.75%
$25,000,000 or more	3.90%

Mortgage Related Costs

Purchasers obtaining mortgage loans are also advised that they will be responsible for the payment of all closing costs and expenses in connection therewith in amounts determined by the lender. These costs customarily include origination fees (or "points"), commitment fees, fees for credit checks, mortgage title insurance, lender's attorneys' fees and appraisal fees. Also a Purchaser obtaining a mortgage may be required by the lending institution to deposit monthly with the lending institution, commencing with the Closing Date, an escrow for the payment of annual real estate taxes and insurance premiums. The amount of such escrow deposit to be made at Closing will depend on the number of months remaining between the closing of title and the date these amounts are next due to be paid and the estimated amounts then payable, as well as the custom and practice of the particular lender involved.

To the extent that the Purchaser is entitled to any credit against the mortgage recording tax by reason of any prior mortgage against the Unit or the Property, the Purchaser shall pay to Sponsor at the Closing for such Unit the amount of any such credit, if applicable. If the Purchaser obtains a mortgage loan, the Purchaser will pay Sponsor an amount equal to the partial mortgage tax credit which may be available pursuant to §339-ee(2) of the New York State Condominium Act.

In the event the credit under §339-ee(2) is not available, an exemption is available if Purchaser's lender assumes or consents to the assignment of a mortgage lien encumbering such Purchaser's Unit. At the request of Sponsor, Purchaser shall fully cooperate with Sponsor in all respects in connection with the severance and assignment of a portion of the mortgage indebtedness encumbering the Property in an amount not to exceed such Purchaser's loan amount, and the assignment of the severed portion to Purchaser's lender and the consolidation of such severed portion of the mortgage indebtedness encumbering the Property with Purchaser's mortgage. To the extent that the Purchaser is entitled to an exemption from the mortgage recording tax by reason of any prior mortgage against the Unit or the Property, including but not limited to Sponsor's mortgage, the Purchaser shall pay to Sponsor at the Closing for such Unit the amount of any such exemption. The severance and assignment of a portion of the mortgage on the Property, as contemplated herein would not result in any additional risk or cost to the Purchaser; under no circumstance will this be the cause of Purchaser losing financing. Any severance/assignment transaction will be initiated only after financing has been procured by Purchaser. After Purchaser has obtained a commitment letter, Sponsor's counsel will notify Purchaser to contact their lender and request the lender to participate in the assignment; if the lender does not agree to assume or consent to the assignment of a mortgage, then the closing will proceed conventionally. If Purchaser's lender agrees to participate, Purchaser's lender will coordinate with Sponsor's counsel to prepare the necessary documents for closing; Purchaser shall not be liable for an adjournment

due solely from the additional coordination required for the severance and assignment; Sponsor shall not cause Purchaser to lose financing.

For properties in New York City, the mortgage tax is currently 2.05% less $30.00 of any mortgage obtained by the Purchaser of less than $500,000.00 and 2.175% less $30.00 for mortgages of $500,000.00 or more. Of this amount the lender pays a portion of the mortgage tax equal to 0.25% of the mortgage amount. In no event will the amount payable by Purchaser to Sponsor exceed the amount of mortgage tax which would have been payable by the Purchaser if such mortgage tax credit or exemption had not been available to Purchaser.

Common Charge and Real Estate Tax Adjustments

All real estate taxes and Common Charges attributable to a Unit paid by Sponsor for any period of time during which the Unit Owner will own the Unit, shall be adjusted between Sponsor and Purchaser as of the Closing Date.

If a Unit closes during the 2019/2020 tax year (i.e., the tax year running from July 1, 2020 to June 30, 2021), it is possible the Unit will not be separately assessed for real estate taxes for that tax year by that Unit's closing date. In such event, the adjustment for real estate taxes will be based on the Unit's proportionate share of the real estate taxes for the Property, which shall be obtained by multiplying the taxes payable on account of the Property for that year by the Common Interest attributable to the Unit.

If separate tax assessments have not been made for individual Units prior to the closing of title to a Unit, Sponsor will collect from each Purchaser at closing, and will place in escrow in a separate account established by the Sponsor for that purpose, an amount equal to the Unit's estimated proportionate share of the real estate taxes projected to be due for the entire Property for the half of the tax year next commencing after the closing of said Unit (i.e., for either the first half or second half, depending on when the Unit closes). If the tax assessor indicates that more than one half of a tax year may elapse before the Units are individually assessed, Sponsor shall collect at closing Purchaser's proportionate share of taxes for the upcoming half and shall deposit the same in the account described above. Until separate tax assessments have been made for individual Units, a Purchaser that obtained financing may have to maintain a second tax escrow account with their lender. With respect to the balance of the estimated taxes due for the next applicable tax period, the Board of Managers is authorized by Article II, Section 10. of the By-Laws, and shall be obligated to collect monthly escrows from Unit Owners with their Common Charges based upon the estimated tax bill for the entire Property and the then current tax rate deposit the same in the tax escrow account. At the time taxes are due and payable, Sponsor shall pay out of Sponsor's own funds, Sponsor's proportionate share of the Property tax bill allocable to the Unit(s) Sponsor then owns, based on the allocation method described above, and the Board of Managers shall be obligated to cause the release to Sponsor of the appropriate amount of escrowed tax funds in the tax escrow account for Sponsor's use in paying the share of taxes attributable to Units that have been sold and closed to other Unit Owners.

If the actual taxes due for any period for which Sponsor collected escrows are higher than the amount collected and held in escrow, the Board of Managers shall pay the difference and shall bill Unit Owners for their proportionate share of any necessary reimbursement, as a Special

Assessment. Sponsor will remain liable for all real estate taxes attributable to Sponsor's Units until Sponsor sells and conveys those Units. If any Unit Owner fails to pay a Unit's pro rata share of real estate taxes when due, by Common Charge billing, special assessment billing, or both, the Board of Managers will have a lien on such Unit for non-payment thereof, as if such charges were Common Charges.

If the actual taxes due for any period for which Sponsor collected escrows are lower than the amount collected and held in escrow, the Board of Managers shall pay the Unit Owners their proportionate share of any excess. If the Sponsor collected then Sponsor has to pay or if the Board of Managers collected then the Board of Managers has to pay.

Until the Units have been separately assessed, all post-closing amendments shall disclose the amount of the funds deposited in escrow for the payment of real estate taxes for the unsold Units.

Closing Counsel Fees

Each Purchaser will be required to pay certain fees to Sponsor's attorneys including, but not limited to, a fee of $2,500.00 and ACRIS preparation fee of $250.00 for the Purchaser's Unit which will cover the legal and other fees and expenses of processing the sale of the Unit. In the event the Closing does not take place on the Closing Date, through no fault of Sponsor and provided further that Sponsor is ready, willing and able to close on the Closing Date, (i) the apportionment of those items set forth in the Purchase Agreement shall be made as of the originally established Closing Date rather than as of the date the Closing actually occurs, (ii) Purchaser shall pay Sponsor, at Closing, interest on the unpaid balance of the purchase price for each day starting from (and including) the originally scheduled Closing Date to (and including) the day before the actual Closing Date, where interest shall be equal to the highest legal rate as of the Closing Date (the current rate is 16% per annum). The following additional charges may apply:

i. $500.00 to Sponsor's attorney if the Closing is not held at Sponsor's attorneys' offices at the request of Purchaser or Purchaser's lender.
ii. $500.00 to Sponsor for each adjournment of the Closing requested or caused by Purchaser or Purchaser's lender.
iii. $500.00 to Sponsor's attorney if the Closing is held outside New York City at the request of Purchaser or Purchaser's lender.
iv. $1,000.00 to Sponsor's attorney for the preparation of a letter of default.
v. $350.00 to Sponsor's attorney if a Purchaser shall obtain mortgage financing through a lender to defray the additional costs associated therewith.
vi. $1,000.00 to Sponsor's attorney for an assignment agreement, if requested by Purchaser and provided Sponsor has consented thereto.
vii. $1,000.00 to Sponsor's attorney for preparation of Interim Lease Agreement.

Nothing herein shall be construed to mean that the Sponsor must grant an adjournment of title when requested to do so. If at a Purchaser's request Sponsor grants an adjournment or adjournments of their closing of title in excess of five (5) days in the aggregate, the Sponsor has the option of collecting an additional five percent (5%) of the purchase price of the Unit as an additional Deposit.

Professional Fees

Purchaser shall have sole responsibility for payment of all professionals, including attorney(s), employed or retained by Purchaser.

Working Capital and Reserve Fund Contribution

Purchasers will be required to pay at Closing an amount equal to one (1) month of common charges as a contribution to the Working Capital Fund and one (1) month of common charges as a contribution to the Reserve Fund. Except for the initial contribution by Purchasers, the Reserve Fund is funded through Common Charges.

Example of Typical Closing Costs

The following is a numerical example of all closing costs based on the presumptions set forth below and assuming current rates and charges:

Assuming that a Purchaser closes timely and incurs no penalties under the Purchase Agreement, the closing costs for a Unit with a purchase price of $1,000,000.00 and assuming a mortgage of $800,000.00 will be approximately:

Title Insurance Fee:	$	4,508.00
Loan Premium:	$	931.00
Endorsements	$	75.00
Transfer Taxes - New York State:	$	4,074.00
Transfer Taxes - New York City:	$	14,510.06
Mansion Tax:	$	10,182.50
Mortgage Recording Tax:	$	15,370.00
Recording Fees:	$	550.00
Search Fees:	$	520.00
Other Fees:	$	40.00
Subtotal	**$**	**50,705.56**
Working Capital Fund:	$	500.00
Reserve Fund:	$	500.00
Sponsor’s Attorney’s Closing Fee:	$	2,500.00
Sponsor’s Attorney’s Purchaser Financing Fee:	$	350.00
ACRIS Preparation Fee:	$	250.00
Total Estimated Closing Costs:	**$**	**54,805.56**

The entire contents of this section “Unit Closing Costs and Adjustments” as the same may be revised or amended shall be deemed incorporated in the Purchase Agreement for each Unit.

RIGHTS AND OBLIGATIONS OF THE SPONSOR

Sponsor is retaining the unconditional right to rent Units in the Building after consummation of the Offering Plan that are being offered herein. Except for Interim Leases, Sponsor will not rent Units prior to First Closing. Unless this Offering Plan is abandoned, Sponsor will endeavor in good faith to sell Units in a reasonably timely manner rather than rent after the Offering Plan has been consummated but makes no representation that it will execute Purchase Agreements to sell more than fifteen percent (15%) of the Units necessary to declare the Offering Plan effective. Twelve (12) Residential Units satisfy the fifteen percent (15%) threshold. As Sponsor's right to rent Units is unconditional, this Offering Plan may not result in the creation of a condominium in which a majority of the Units are owned by owner-occupants or investors unrelated to Sponsor; Sponsor could effectively control the Board indefinitely.

Indemnification

Sponsor is obligated to defend any suits or proceedings arising out of Sponsor's acts or omissions under the Offering Plan and applicable law with respect to the Offering. Sponsor will indemnify and hold the Board of Managers and the Unit Owners harmless from any such suits or proceedings.

The Condominium shall assume the performance of all obligations under the labor, service, and maintenance agreements as described in the "Notes to Schedule B" section of the offering plan (including payment obligations) of the Sponsor, if any, accruing on or after the date of closing of title to the first Unit pursuant to the Offering Plan, in effect on such date which have been assigned to the Condominium pursuant to the Offering Plan, and shall indemnify and hold Sponsor harmless from and against any and all claims, liabilities, costs and expenses arising of or with respect to such agreements or with respect to the Property accruing on or after such date, provided Sponsor has timely paid all Common Charges and other sums due to the Condominium and was not the cause of any breach of the agreements assumed by the Condominium.

Sponsor's Obligations Survive

All representations under the Offering Plan, all obligations pursuant to the General Business Law, and such additional obligations under the Offering Plan that are to be performed subsequent to the Closing Date will survive delivery of the deed.

The obligations set forth in the Offering Plan contain all the obligations of Sponsor under the Offering Plan and none other shall be implied, except that nothing contained herein shall be deemed to limit the rights of Purchasers relative to their Units under their respective Purchase Agreements or under applicable law. Sponsor makes no warranties other than as set forth in the Offering Plan. The obligations of Sponsor under this section shall survive the delivery of the Unit Deeds to the respective Unit Owners for the respective time periods indicated herein. Sponsor shall not be liable for, nor obligated to defend, any suits or claims with respect to any Unit, arising out of any occurrence taking place on or after the date of the closing of title to such Unit, or the leasing thereof to any Purchaser or, with respect to the Common Elements or Limited Common Elements, Sponsor shall not be liable for, nor obligated to defend, any action arising out of any occurrence taking place on or after the date of the First Closing, except for suits or claims arising out of the

acts or omissions of Sponsor or the representations made by Sponsor in the Offering Plan. Sponsor will indemnify and hold the Board of Managers and the Unit Owners harmless from any such suits or proceedings arising out of the acts or omissions of Sponsor or the representations made by Sponsor in the Offering Plan.

The obligations of Sponsor under this section with respect to the Condominium, the Common Elements or the Limited Common Elements shall be enforceable only by the Board of Managers on behalf of all Unit Owners. In no event shall any obligations of Sponsor be enforceable by individual Unit Owners unless the Board of Managers fails to give written notice to enforce such obligations within ninety (90) days following the giving of written notice of such claim by any Unit Owner to the Board of Managers. The Board of Managers has a fiduciary duty to act in the best interest of the Condominium, even during the Sponsor Control Period. Nothing herein shall prevent an individual Unit Owner from bringing an action in the nature of a derivative action against the Board of Managers. Sponsor agrees that during the Sponsor Control Period it will in its capacity as the Board of Managers enforce such obligation when required to do so by a resolution duly passed by a majority of the Unit Owners, excluding Sponsor, at a special meeting of the Unit Owners called for such purpose. Furthermore, any provisions that give Sponsor control of the enforcement of Sponsor's obligations are not lawful. In addition, if there are non-Sponsor members of the Board of Managers, and there is a vote on whether to sue Sponsor, Sponsor's board representatives cannot lawfully vote on that issue. See Park River Owners Corp. v. Bangser Klein Rocca & Blum, 269 A.D.2d 313, 703 N.Y.S.2d 465 (1st Dept. 2000); McKinney's Consolidated Laws of the State of New York, General Business Law, Volume 19, pocket part, page 193; and BCL § 713(a)(1). Also of interest is Board of Managers of Fairways at North Hills v. Fairways at North Hills, 193 A.D.2d 322, 603 N.Y.S.2d 867 (2d Dept. 1993), discussed in McKinney's Consolidated Laws of the State of New York, General Business Law, Volume 19, page 160.

Operating Expenses

Sponsor agrees to pay all Common Charges, special assessments and real estate taxes with respect to all Unsold Units imposed by Board of Managers in accordance with this Offering Plan. Sponsor represents that it has the financial resources to meet its obligations with respect to Unsold Units. Sponsor expects to fund its financial obligations to the Condominium from the income from projected sales and if necessary, from the personal financial assets of Sponsor's principal. Except as specifically set forth herein, no bond or other security has been furnished to secure Sponsor's obligations hereunder, including, but not limited to, Sponsor's obligations to obtain a final Certificate of Occupancy.

Sponsor is reserving the right to delay the collection of Common Charges. During any such period of delay, the Sponsor will timely pay all expenses of the Condominium, including, but not limited to, insurance premiums and any reserve fund payments required by lenders. Such expenses shall not include individual Unit Owner expenses such as real estate taxes, utility charges, etc. Upon commencement of collection of Common Charges, there will not be an assessment for any item in the approved budget for the Condominium. Regardless of the delay in collection of Common Charges, Sponsor shall remain obligated to update the budget for the Condominium as required by Department of Law governing regulations. In the event Sponsor elects to delay the collection of Common Charges, Sponsor shall disclose such fact in the closing notice or statement to Purchasers. Thereafter, Sponsor shall also disclose such fact in the post-closing amendment to

the Offering Plan as a benefit to subsequent purchasers. Such amendment shall also disclose the anticipated period of delay. Prior to commencing the collection of Common Charges, Sponsor will notify all unit owners by written notice of the expiration of the delay period. Notice shall be given to owners in writing at least thirty (30) days prior to the commencement of collection of Common Charges. Thereafter, Sponsor will disclose such fact in the next substantive amendment to the Offering Plan as a benefit to subsequent purchasers.

Purchasers are advised that all of the Common Elements in the Building may not be available for use at the time of the First Closing. While Sponsor will attempt to provide all Common Elements within a reasonable time, Sponsor will complete all Common Elements within twenty-four (24) months of the First Closing. Purchasers will not be entitled to any credit or abatement against the Purchase Price or the Common Charges if any of the Common Elements are not available for use on or after a Purchaser's Closing. Notwithstanding the foregoing, the Board of Managers shall have the right, but not the obligation, in its sole and absolute discretion, to adjust the budget for the First Year of Operations which is based on a fully operational building. The Board of Managers may reduce Common Charges, allocate surplus funds to a special purpose fund, retain surplus funds as the Working Capital Fund, or refund Common Charges.

Sponsor reserves the right to use its majority vote on the Board of Managers to cause a refund to be issued to Unit Owners. If the actual expenses of operating the condominium are less than the projected expenses set forth in the budget for the First Year of Operations then, to the extent such excess was paid by such Unit Owner, the difference between the actual expenses and the full common charges will be refunded to all Unit Owners (including the Sponsor) on a pro-rated basis in the form of either a credit against future common charges or as a cash reimbursement to the extent that the Unit Owner (including the Sponsor) has sold the Unit prior to the receipt of the full credit. Sponsor makes no warranty or representation that the operating expenses during this period will be less than the actual common charges or as to the amount of any credit that may be available as a result of such computation.

Notwithstanding the foregoing, if a refund is contemplated for the First or any subsequent year of condominium operation, such refund may only be effectuated if an independent certified public accountant, as part of its preparation of the yearly annual statement for the condominium has determined that a refund is warranted based on an excess payment of common charges by unit owners over actual expenses for the condominium and has determined the amount of such refund as part of its annual review. For purposes of this Offering Plan, an "excess payment of common charges" shall mean the actual expenses of the condominium were less than the projected expenses set forth in the Budget of the condominium. No refund may be given unless all expenses of the condominium are paid, including but not limited to, insurance premiums and reserve funds required by lenders. During the budget year following a year for which a refund was effectuated, no special assessment or increase in common charges shall be instituted to pay for any item which was set forth in the previous year's budget and which was refunded to unit owners as per the foregoing. Sponsor shall remain obligated to update the budget for the Condominium as required by Department of Law governing regulations.

Casualty Insurance

Sponsor shall procure fire and casualty insurance, as set forth in Schedule B, pursuant to

an agreed amount replacement value policy or in an amount sufficient to avoid co-insurance, as reflected in Schedule B. Such insurance will provide that each Unit Owner is an additional insured and that there will be no cancellation without thirty (30) days' notice to the Board of Managers and Unit Owners. The insurance policies will also contain waivers of subrogation, waivers of invalidity due to acts of insured and Unit Owners and waivers of pro rata reduction of liability of the insurer due to other insurance carried by individual Unit Owners. Prior to the First Closing, the Building will be insured by the Sponsor; after the First Closing the Building will be insured by the Condominium. Sponsor shall be reimbursed for the cost of such insurance premium(s) by the Condominium. A person in possession who is not an owner cannot insure the Unit since they have no ownership interest, and the Unit cannot be doubly insured. The risk of loss is assumed by a Purchaser who has taken possession of the Unit prior to closing to the extent that such loss is not covered by the Condominium's or Sponsor's insurance.

Risk of Loss and Restoration after Casualty

The risk of loss to the Unit by fire or other casualty, until the earlier of closing of title or the taking of possession of the Unit by Purchaser, is assumed by Sponsor; provided that Sponsor shall have no obligation or liability to repair or restore the Unit. The risk of loss is assumed by a Purchaser who has taken possession of the Unit prior to closing, e.g. via an Interim Lease, to the extent that such loss is not covered by the Condominium's or Sponsor's insurance.

In the event of damage or destruction of the Unit, due to fire or other casualty, prior to the closing of title, and the election by Sponsor to repair or restore the Unit to its original condition immediately prior to the fire or other casualty, the Purchase Agreement shall continue in full force and effect, Purchaser shall not have the right to reject title or receive a credit against, or abatement in, the Purchase Price, and Sponsor shall be entitled to a reasonable period of time within which to complete the repair or restoration. Any proceeds received from insurance or in satisfaction of any claim or action in connection with such loss shall, subject to the rights of the Board of Managers and other Unit Owners if the Declaration has theretofore been recorded and any mortgagee of Sponsor, belong entirely to Sponsor and if such proceeds are paid to Purchaser, Purchaser shall promptly upon receipt thereof turn them over to Sponsor. As Sponsor has a reasonable period of time to restore a Unit after the occurrence of a casualty if it elects to do so, and the time period that would be considered reasonable will depend on the nature of the casualty, the financing commitment of a Purchaser who is dependent on financing to pay the balance of the purchase price may expire prior to the restoration of the Unit, and such Purchaser could lose their Deposit if the Purchaser is not able to extend the term of the commitment to accommodate the restoration period.

In the event of damage to or destruction of the Unit by fire or other casualty prior to the closing of title and the election by Sponsor not to repair or restore the Unit, or, if the Declaration has been recorded prior thereto, then if the Unit Owners do not resolve to make such repairs or restoration pursuant to the By-Laws, the Purchase Agreement shall be deemed cancelled and of no further force or effect and Sponsor shall return to Purchaser all sums deposited by Purchaser hereunder within thirty (30) days of making the election, together with interest, if any, earned thereon, and neither party shall have any further rights, obligations or liability to or against the other and the parties shall be released and discharged from all obligations and liability hereunder and under the Offering Plan, except that if Purchaser is then in default hereunder (beyond the

applicable grace period, if any), Sponsor shall retain all such sums deposited by Purchaser hereunder and any interest earned thereon, as and for liquidated damages. Sponsor shall provide written notice to the Purchaser within sixty (60) days of the damage to the Unit whether or not Sponsor shall elect to repair or restore the Unit.

Dissolution of Sponsor

In the event of the dissolution or liquidation of the Sponsor or the transfer of ten (10) or more units or twenty percent (20%) or more of the total number of Units in the Condominium, whichever is less, the principals of the Sponsor will provide financially responsible entities or individuals who will assume the status and all of the obligations of the Sponsor for those Units under the Offering Plan, applicable laws or regulations.

Construction Financing

Sponsor has obtained financing from Whitehorse Onshore Credit Opportunities I, LLC, H.I.G. Whitehorse Trinity Credit, LLC, BOF Holdings, IV, LLC, and H.I.G. Global Credit Holdings, LLC, located at 600 Fifth Avenue, 23rd Floor, New York, NY 10020. The liens held by the Lender shall be subordinate to the Declaration. Each Unit being conveyed at a Closing and such Unit's appurtenant Common Interest will be released from the Lender's mortgage upon tender of the relevant payment as agreed to between Sponsor and Lender. Lender requires a minimum of fifteen (15) Residential Units be sold prior to declaring the Offering Plan effective.

Completion of Construction

Sponsor is obligated to build and complete the Condominium in accordance with the Building Plans and Specifications identified in the Offering Plan, subject to Sponsor's right to substitute equipment or materials of Equal or Better Quality for construction and design and make modifications in layout or design; provided however, that Sponsor may not:

(i) Substitute equipment or materials of lesser quality or design; or

(ii) change the size, location of Buildings or Units other improvements or Common Elements if such changes affect the percentage of Common Interests or adversely affect the value of any Unit to which title has closed or for which a Purchase Agreement has been executed and is in effect unless all affected Unit Owners and contract vendees consent in writing to such change.

Sponsor will install carbon monoxide detectors as required in all New York City multiple dwellings.

Certificate of Occupancy

Prior to the closing of title to the first Unit, Sponsor shall have obtained a temporary or final Certificate of Occupancy for the entire Condominium. Sponsor anticipates on being able to obtain a final Certificate of Occupancy ("FCO") and all necessary permits for all elements of the Condominium within two (2) years of closing of title to the first Unit and, prior to the issuance of

a FCO will cause any expiring temporary Certificate of Occupancy ("TCO") to be extended. Purchasers are advised that in New York City, newly constructed and newly renovated buildings are sometimes offered as condominium projects without a final Certificate of Occupancy covering the entire building but with only a TCO, and sometimes with several successive TCOs. Certificates of occupancy are generally governed by Section 301 of the New York State Multiple Dwelling Law and local building codes and rules. Both TCOs and FCOs are issued by the New York City Department of Buildings ("DOB"). A TCO is intended to indicate that the property conforms substantially to the DOB approved plans and specifications, and to the requirements of all applicable laws, rules, and regulations for the uses and occupancies specified in the TCO. No change of use or occupancy shall be made unless a new Certificate of Occupancy is issued. All TCOs have an expiration date. A TCO typically expires ninety (90) days after the date of issuance. When a TCO expires and is not renewed, it may be difficult or impossible to buy insurance, refinance, or sell units. In New York City, it is common for Sponsors to commence unit closings when some or all units are covered by a TCO rather than a FCO. Sponsor anticipates this scenario may occur. Sponsor and its principals will undertake the responsibility for extending each TCO received prior to the expiration thereof, and ultimately for obtaining a FCO covering the entire Building within two (2) years from the date of the issuance of the first TCO. However, Sponsor and its principals make no representation or guarantee that DOB will issue the FCO within such two (2) year period. NOTWITHSTANDING THE FOREGOING, SPONSOR AND ITS PRINCIPALS ARE OBLIGATED TO PROCURE THE FINAL CERTIFICATE OF OCCUPANCY FOR THE ENTIRE BUILDING, AND SHALL EXERCISE BEST EFFORTS TO OBTAIN THE FCO WITHIN SUCH TWO YEAR PERIOD WHILE KEEPING THE TCO CURRENT. Unit Owners and the Board of Managers shall be obligated to cooperate with and refrain from obstructing Sponsor in these undertakings. Buyers are advised to visit the DOB website for further recommendations when purchasing a unit in a building that does not have a FCO. A Factsheet on Certificates of Occupancy is available on the DOB website at http://www.nyc.gov/html/dob/downloads/pdf/co_factsheet.pdf.

In the event any closing of title occurs before the issuance of a final Certificate of Occupancy covering the Unit, Sponsor shall maintain all Deposits and funds received from the Purchasers of Units in a special escrow account as required by Section 352-e(2-b) of the General Business Law, unless Sponsor's engineer or architect certifies that a lesser amount will be necessary to complete the work needed to obtain a final Certificate of Occupancy, in which case the sum exceeding the amount so certified by such engineer or architect may be released to Sponsor from the special escrow account. Alternatively, Sponsor may deposit with an Escrow Agent any one or a combination of the following: cash or an unconditional, irrevocable letter of credit or Sponsor may post a surety bond and/or maintain unfunded, a portion of the construction loan available to Sponsor for construction purposes aggregating amount certified by Sponsor's engineer or architect. In certain circumstances, funds held by Sponsor's Construction Lender may be acceptable as an alternative form of collateral, so long as the Construction Lender is obligated to advance or escrow funds needed to procure a FCO, notwithstanding that Sponsor may have defaulted on the terms of its loan agreement(s). The acceptability and use of this form of collateral will be determined by the Department of Law upon application by Sponsor. The Department of Law must be furnished with appropriate documentation establishing a lender's agreement and obligation to advance or escrow such funds to satisfy 13 NYCRR § 20.3(t)(13). In such case, Sponsor shall have the right to draw down remaining portions of said letter of credit, cash, construction loan available to Sponsor for construction purposes, provided the unfunded portion

of such construction loan and/or, remaining cash and/or letter of credit in the aggregate is, at all times no less than the amount that Sponsor's architect, engineer or construction manager certified is adequate to complete the work necessary to obtain a final Certificate of Occupancy. In the event Sponsor desires to post a bond pursuant to this paragraph, prior to posting such bond Sponsor will file an amendment to the Offering Plan disclosing same.

The amount retained in escrow pending the delivery of a final Certificate of Occupancy and the architect's certification certifying such amounts will be included in the initial post-closing amendment and all subsequent amendments to the Offering Plan until the FCO is obtained. The use of any alternative security will be previously disclosed in an amendment to the Offering Plan.

Warranties of Construction

The Housing Merchant Implied Warranty (General Business Law Article 36-B) does not apply to this offering because that statue applies only to new single family homes or new for sale units in a multi-unit residential structure which is five (5) stories or less in which title is transferred to Purchasers under a cooperative or condominium regime. As the Building is greater than five (5) stories, this statute is not applicable. Where the Housing Merchant Implied Warranty does not apply, a common law implied warranty does not exist; therefore, unless a warranty is expressly provided by Sponsor, none such exists. See Fumarelli v Marsam Dev., 92 NY2d 298, 301 [1998]; Bd. of Managers of Beacon Tower Condominium v 85 Adams St., LLC, 136 AD3d 680 [2d Dept 2016]; Pine St. Homeowners Ass'n v 20 Pine St. LLC, 109 AD3d 733 [1st Dept 2013]. Sponsor does not warrant the materials or workmanship of construction in Units, Limited Common Elements, or Common Elements. Sponsor does not warrant the materials, workmanship, installation or operation of any appliances, equipment or fixtures. Nevertheless, Sponsor has the absolute obligation to design and build the Building in accordance with applicable law, codes, regulations, filed plans and specifications, and locally accepted building practices for items which are not covered by codes. Sponsor's obligations, regardless of any limitations in any warranty or in the Offering Plan, cannot go below the duty to construct the Building in accordance with all applicable laws and the Plans and Specifications, and any conflict between any such disclosures and Sponsor's obligation to construct the Building in accordance with all applicable Laws and the Plans and Specifications shall be resolved in favor of the latter. NO DISCLAIMER OR LIMITATION OF LIABILITY ON SPONSOR'S PART SHALL APPLY TO SPONSOR'S OBLIGATIONS UNDER ALL APPLICABLE STATUTES, LAWS AND REGULATIONS.

Purchasers may have a claim under a breach of contract theory in the event Sponsor does not fulfill their obligation to have the building designed and built in accordance with applicable law, codes, regulations, filed plans and specifications, and locally accepted building practices for items which are not covered by codes or otherwise fails to fulfill its obligations under the Offering Plan or Purchase Agreement. In addition, Purchasers may utilize any applicable warranties provided by a manufacturer or contractor for the defective materials or workmanship; Sponsor is obligated to assign any warranties provided by manufacturers and contractors. Notwithstanding the foregoing, in the event that Purchaser or Unit Owner, as the case may be, makes any alterations to the Unit after taking possession, then the warranties provided in accordance with the terms of the Offering Plan or any repairs Sponsor has agreed to make in accordance with the terms of a signed inspection statement shall be void and of no further force or effect if the alteration directly or indirectly affected or damaged the subject matter of the warranty or repair.

In the event of a patent or latent defect, Sponsor must be notified of the defect in writing (i) by the Unit Owner to whom Sponsor sold a Unit, within six (6) months following the closing of the sale of the Unit to the Unit Owner if the defect concerns that Unit (or if Sponsor permits occupancy of the Unit by a Purchaser under an interim lease, then within six (6) months after the commencement date of the interim lease), or (ii) by the Board of Managers, within the later of twelve (12) months from (a) the issuance of a TCO covering the entire Building, or (b) the first Unit Closing if the defect concerns the Common Elements. If Sponsor is not notified within these time periods, Sponsor shall not have any obligation to consider causing remediation of the problem. In no event, however, shall Sponsor be obligated to compel, or to take action to compel, the General Contractor (or any contractor or subcontractor) to perform under any guarantee or warranty given by it in connection with work performed at the Property. If properly notified, Sponsor shall cause the defect to be remediated in accordance with all applicable laws and the Plans and Specifications.

In addition, in no event shall Sponsor be responsible for any immaterial condition resulting from normal wear and tear or natural deterioration of from the normal shifting or settling of the Building, or for any defects of immaterial nature, including but not limited to partial or total death of any landscape improvements, nail pops, ridging on sheet rock walls, lumber shrinkage, door sticking due to weather, door warpage, tile, marble and granite grouting, separation in joints of tile, marble, granite or wood flooring, floor levels, ceiling imperfections, painting defects, alignment of bathroom finishes, air filtration from windows, and consequential damage resulting from settlement or normal plumbing, heating and air conditioning, noises, or carpet discoloration and stretching. In addition, Sponsor shall not be responsible for paint touch-ups, or for repair of chips, mars, breaks or other defects in window sashes, electric fixtures, interior painted surfaces, sinks, tubs, bowls, bidets (if any), cabinets, countertops, vanity tops and bases, doors, mirrors, hardware, flooring or appliance cabinets, unless notified of any such defect therein prior to closing of title to the Unit in question or the leasing of the Unit to the Purchaser thereof and Sponsor agreed to repair such items. Sponsor has no obligation to make any repair to the Units or the Common Elements, except as expressly set forth in this Offering Plan. Nothing contained herein shall be construed to render Sponsor liable for consequential damages, whether based on negligence, breach of contract, warranty or otherwise (except as Sponsor may be liable for by law).

Notwithstanding anything to the contrary in the foregoing discussion, both Unit Owners and the Board of Managers shall be obligated to permit Sponsor and its contractors and agent’s access to Units and the Common Elements at the request of Sponsor and/or its contractors and agents, in order for Sponsor to complete construction in accordance with this Offering Plan.

References in this Section or elsewhere this Offering Plan to excluded repairs or excluded conditions with respect various items listed shall not be construed to imply an obligation on the part of Sponsor to do any work, renovation or rehabilitation or to install any equipment, fixtures or appliances or other items except, in each case, as expressly provided in "Description of Property and Specifications or Building Conditions."

The Sponsor reserves the right to amend the Plans and Specifications and to make changes in the materials, appliances, equipment, and fixtures if (a) required or approved or accepted by governmental authorities having jurisdiction over the Property or by the Sponsor's architect; or (b) required by job conditions, local shortages or unavailability or materials; or (c) ordered by the

Purchaser for their Unit without affecting Units previously sold. Changes or substitutions in materials, appliances, fixtures and equipment may also be made by the Sponsor provided that such substitutions are of Equal or Better Quality. See the section "Changes in Prices and Units" set forth in Part I of the Offering Plan.

Sponsor will not be obligated to correct and will not be liable to any Purchaser as a result of immaterial variations in the dimensions or arrangement of rooms, walls or other areas within Units, or in the Plans and Specifications, or in the description of the Building or a Unit set forth in the Offering Plan.

Except as otherwise provided in this Offering Plan, where alternatives are specified or where a particular practice, method, or design of construction, equipment, material or supply is not specified, the choice and decision of the Sponsor shall be determinative.

Inspection Statements

At least one week (but not more than one month) prior to the Closing, Purchasers shall be given an opportunity to inspect the Unit prior to Closing. Punchlist items to be completed in the Unit pursuant to the Offering Plan and/or the Purchase Agreement shall be itemized on an "Inspection Statement," a form of which is contained in Part II of the Offering Plan, signed by both Sponsor and Purchaser. The Inspection Statement merely serves to identify and memorialize any conditions the Purchaser believes to be material. Sponsor's refusal to sign the Inspection Statement due to a disagreement with the items on the Inspection Statement shall not be grounds to cancel or postpone the Closing, unless otherwise entitled under applicable law. Nevertheless, Sponsor has the absolute obligation to design and build in accordance with applicable law, codes, regulations, filed plans and specifications, and locally accepted building practices for items which are not covered by codes, and otherwise fulfill its obligations under the Offering Plan or Purchase Agreement; Purchasers may have a claim under a breach of contract theory in the event Sponsor does not fulfill their obligations under the Offering Plan or Purchase Agreement.

Sponsor shall be obligated to complete the items agreed to on the Inspection Statement within a reasonable time after Closing. However, if Sponsor agrees in writing to complete any items on the Inspection Statement prior to Closing, Purchaser must re-inspect the Unit on the day prior to Closing to inspect and sign off on all items Sponsor agreed to complete. No open items of work will be discussed at the Closing itself. With the exception of items Sponsor agrees in writing to complete prior to the Closing, Sponsor's failure to complete any of the items listed on the Inspection Statement shall not be grounds to cancel or postpone the Closing, unless otherwise entitled under applicable law.

Purchasers may not add any additional work items to the Inspection Statement after the final inspection of the Unit has occurred, and neither Sponsor nor its contractors, subcontractors, principals, managers or members shall have any obligation to perform any such additional work items. Notwithstanding anything to the contrary set forth above, neither Sponsor nor its principals, managers, members, agents, designees, employees or affiliates assumes any responsibility and will not be liable to repair or replace any of the following immaterial conditions:

- any condition resulting from normal wear and tear or natural deterioration from the normal movement, settlement and shrinkage or expansion of the residential units or the Building generally and/or building materials;
- partial or total death of any trees, shrubs, bushes or other landscape improvements, protruding dry wall fastenings, ridging on gypsum board, lumber or minor floor shrinkage or gapping, door or window sticking due to weather, door warpage including, without limitation, warpage of any doors, minor scratches or chips in plastic, glass, metal, wood, vitreous china, stainless steel, tile porcelain or stone surfaces, bathroom finish, cracked grouting, adjustment or bi-fold door, walls not square, electrical plates or signs not straight, slight discoloration, expansion or shrinkage, slight separation between base and floor or differing coloration of any and all concrete, ceramic or stone tiles in gardens or kitchens;
- normal settlement and deflection or any minor consequential damage resulting therefrom including, without limitation, cracks in roof ballast or concrete cracks which do not reduce the structural integrity of the building generally;
- non-material deviations in the level of ceilings and non-material imperfections in ceiling finishes;
- non-material imperfections in painting finishes including, but not limited to, variances in color or texture;
- non-material deviations in the floors' levelness, buckling, gapping or sinking due to expansion and/ or shrinkage and/ or movement;
- slight misalignment of bathroom finishes and minor variation in grouting or tile thickness;
- minor noise, vibrations or odors from normal plumbing, heating, ventilation, air-conditioning and elevator operation, including boilers, condensing units, exhaust fans, elevator machine rooms and equipment;
- potential bathroom vents and ducts on the mechanical terraces, regardless of height, and any noise emanating from such vents and ducts shall be in accordance with permissible decibel levels pursuant to any rules and/or regulations governing noise levels in New York City;
- negligible floor noises and creaking;
- minor carpet or floor discoloring or stretching;
- non-material variations in width, length, thickness, finish, gaps or color range of wood flooring;
- minor chips, scratches, mars, breaks, dents, cracks, imperfections, or other immaterial conditions in each of the following: windows, window glass, frames and hardware; sliding glass doors, frames, door glass and hardware; louvers; shower doors; lighting fixtures, lenses, baffles and globes; all painted surfaces; all sinks, tubs, basins, water closets; kitchen cabinets, backsplashes and countertops; vanity tops and cabinets; all tile, stone or marble floors; saddles, all appliances; woodwork, millwork and doors; mirrors; all hardware; appliance cabinets; ceilings and flooring;

- after the closing of title to a unit, paint touch ups, repair dented appliances or replace light bulbs;
- non-material variations in tone or color of marble or stone or slight floors; saddles, all appliances; woodwork, millwork and doors; mirrors; all hardware appliance; appliance cabinets; ceilings and flooring;
- leaching or minor color variation in exterior color mortar and colored stone or brick, slight dimensional variations in brick joints, and mortar dropping on bricks and window surfaces;
- minor ponding and/or controlled drainage on terraces or balcony surfaces;
- television, radio or other telecommunications reception;
- slight discoloration to hardware or plumbing finishes;
- minor stains, runs, lumps, shags or imperfections in weave and fabric panels;
- terrace tile or pavers not laid flat, or slight color variation in tiles, pavers or mortar, or stained tiles or pavers;
- non-material scratches on window frames or glass;
- any other minor imperfection or immaterial condition, except as expressly warranted pursuant to this Offering Plan, provided it is indicated on written inspection statement and delivered to and acknowledge by Sponsor.

Completion Free of Liens

Sponsor will pay or cause payment to all contractors, subcontractors, materialmen, and all others involved in the construction, establishment, and sale of the Units for all authorized and proper work performed and fixtures, material, and equipment supplied or installed in the construction of the Building, and will cause all mechanics liens arising out of the construction of the Building or the furnishing or installation of fixtures or equipment to be discharged or bonded promptly after any lien is filed.

Sponsor Documents to be delivered to the Board of Managers:

Sponsor shall provide each to the Board of Managers on or before termination of the Sponsor Control Period:

- Final as-built drawings;
- Operations and maintenance manuals for mechanical equipment;
- Electronic system manual;
- Re-commissioning manual;
- Equipment warranties;
- Manufacturer’s roof warranty;
- Major equipment start-up sheets and control system as-built;
- Original test and balance report for HVAC system; and
- Post-construction indoor air quality report.

At Closing, Sponsor will deliver and assign to Purchaser any manufacturers' warranties (to the extent available and assignable) with respect to any equipment and appliances installed by Sponsor in the Unit and the receipt by Purchaser of any subcontractors' warranty certificates for heating and plumbing relating solely to the Unit, if any, to the extent made by such subcontractors and to the extent such warranties are available. Sponsor will also assign to the Board of Managers any warranties available and assignable with respect to all equipment and appliances and heating, plumbing and roofing installed in the Common Elements.

Plan, Exhibits, Documents

Sponsor agrees to keep copies of the Offering Plan, exhibits and documents referred to in the Offering Plan on file at its office or at another designated place for a period of six (6) years from the date the Declaration is recorded.

Sponsor's Rights of Access; Alterations

Sponsor reserves to itself, its successors, assigns, designees, invitees, contractors, agents, employees and tenants, any and all easements and rights of access, in and to Units and Common Elements, to complete construction in a manner consistent with the purposes of this Offering Plan and to ensure Sponsor's rights and obligations hereunder. Sponsor shall provide three days' notice except under exigent circumstances where Sponsor shall provide reasonable notice. Sponsor is obligated to repair any damages caused as the result of the foregoing work. Sponsor will not interfere with a Unit Owner's reasonable use of their Unit during any work period. However, there may be a temporary limitation as to use of the public areas. Sponsor's reservation and rights shall include, but not be limited to:

(i) The right to maintain general, sales and leasing office(s) and personnel on the Premises, to post signs, and to conduct other activities connected with promotion, sales or leasing, such as inspection and display of vacant or licensed Units, as well as all Common Elements, to prospective Purchasers or lessees; and

(ii) Right of access in and to Units and Common Elements for purposes of construction, repair, refurbishment, correction, alterations, finishing, servicing and similar work.

The quality of construction shall be comparable to construction standards customary in the particular trade and in accordance with the Plans and Specifications. Notwithstanding the foregoing, Sponsor will not be responsible for correcting any defects in the operation of any appliances, equipment or fixtures with respect to which assignable warranties or other undertakings are assigned to the Board of Managers or Unit Owners. In addition, in no event shall Sponsor be responsible for any immaterial condition resulting from normal wear and tear or natural shifting or settling of the Building, or for any defects of immaterial nature, including but not limited to nail pops, ridging on sheet rock walls, lumber shrinkage, any consequential damage resulting from settlement or normal plumbing and heating noises. Subsequent to the conveyance of title to a Unit, other than those items listed in the Inspection Statement which Sponsor will be obligated to repair in a reasonable amount of time after closing, Sponsor shall not be responsible for paint touch-ups, repair of dented appliances, porcelain or Formica chips and scratches in tubs, vanities or countertops. Sponsor has no obligation to make any repair to the Units or the Common Elements, except as expressly set forth in this Offering Plan. Sponsor has the obligation

nevertheless, to construct the Building in accordance with applicable Law, codes, regulations, filed plans and specifications, and locally accepted building practices for items which are not covered by codes.

Condominium and Sales Costs and Expenses

Sponsor will pay all expenses incurred prior to the establishment of the Condominium in connection with establishment of the Condominium, and will bear and pay all costs and expenses incurred in connection with the creation of the Condominium, whenever such costs or expenses are incurred, or in connection with the sale of all Units held or owned by Sponsor (except for costs specifically made payable by Purchasers under this Offering Plan), and will pay all selling expenses including, but not limited to, advertising and printing costs, architect and engineering fees, and costs of filing this Offering Plan and amendments thereto.

Interim Leasing, Renting and Use of Unsold Units by Sponsor

Sponsor reserves the right, following the recording of the Declaration of Condominium and prior to the closing of title to any Unit, to lease such Unit to a Purchaser who has executed a Purchase Agreement and paid the requisite Deposit, pursuant to an Interim Lease between Sponsor and Purchaser. Any such Interim Lease will provide that an uncured default by the Purchaser under the Purchase Agreement with respect to the Unit which is the subject of the Interim Lease will constitute a default under the license entitling Sponsor, at its sole option, to immediately terminate the license. In addition, each Purchase Agreement may provide that an uncured default by the Purchaser under any Interim Lease with respect to the Unit which is the subject of the Purchase Agreement will constitute a default under the Purchase Agreement entitling Sponsor, at its sole option, to immediately terminate such Purchase Agreement and exercise any remedies provided therein. See the section "Interim Leases" set forth in Part I of the Offering Plan.

Sponsor is retaining the unconditional right to rent Units in the Building after consummation of the Offering Plan that are being offered herein. Except for Interim Leases, Sponsor will not rent Units prior to First Closing. Unless this Offering Plan is abandoned, Sponsor will endeavor in good faith to sell Units in a reasonably timely manner rather than rent after the Offering Plan has been consummated but makes no representation that it will execute Purchase Agreements to sell more than fifteen percent (15%) of the Units necessary to declare the Offering Plan effective. Twelve (12) Residential Units satisfy the fifteen percent (15%) threshold. As Sponsor's right to rent Units is unconditional, this Offering Plan may not result in the creation of a condominium in which a majority of the Units are owned by owner-occupants or investors unrelated to Sponsor; Sponsor could effectively control the Board indefinitely. In the event Sponsor has rented a Unit after consummation of the Offering Plan, and subsequently sells the Unit pursuant to this Offering Plan, such sale of the Unit will provide that it will be sold in "as is" condition, except for any applicable warranties expressly provided in this Offering Plan.

Sponsor or Successor Sponsor may use or occupy for itself or its agents, or (after the First Closing) to rent or license to a tenant who is not a Purchaser for such fee and upon such terms as are agreed to between the parties, any Unit not conveyed or with respect to which a Purchase Agreement is not then outstanding. Sponsor will notify Purchasers of Units that have been previously occupied or that are then occupied, of such occupancy, prior to the execution of a

Purchase Agreement. Such Unit will be delivered at the Closing, free and clear of any occupants and licenses, unless the tenant or occupant is the Purchaser or unless the Purchase Agreement indicates that the Unit shall be sold subject to a license, a copy of which shall be annexed to the Purchase Agreement. There shall be no obligation of Sponsor or Successor Sponsor to decorate, refurbish or in any way repair such Unit.

Easement

The Sponsor shall have an easement, to the extent permitted by law, to erect, maintain, repair and replace, from time to time, one or more signs on the Building for the purpose of advertising the sale or lease of any Unit in the Condominium, provided such signage does not unreasonably obstruct any Unit (other than an Unsold Unit).

Sponsor reserves to itself, its successors, assigns, designees, invitees, contractors, agents, employees and tenants, any and all easements and rights of access, in and to Units and Common Elements, to complete construction in a manner consistent with the purposes of the offering plan and to ensure Sponsor's rights and obligations thereunder. Sponsor shall provide three days' notice except under exigent circumstances where Sponsor shall provide reasonable notice. Sponsor is obligated to repair any damages caused as the result of the foregoing work. Sponsor will not interfere with a Unit Owner's reasonable use of his or her Unit during any work period. However, there may be a temporary limitation as to use of the public areas. Sponsor's reservation and rights shall include, but not be limited to:

(i) The right to maintain general, sales and leasing office(s) and personnel on the Premises, to post signs, and to conduct other activities connected with promotion, sales or leasing, such as inspection and display of vacant or licensed Units, as well as all Common Elements, to prospective Purchasers or lessees; and

(ii) Right of access in and to Units and Common Elements for purposes of construction, repair, refurbishment, correction, alterations, finishing, servicing and similar work.

Sponsor and/or its designee (and their respective successors and assigns) shall have an easement for so long as the Condominium shall remain in existence: (i) to erect, use, lease, maintain, repair, replace and operate a platform and other facilities for the purpose of erecting, using, leasing, licensing, maintaining, repairing, replacing and operating antennae, satellite dishes and other communications equipment on any part of any Roof of the Building that is designated a Residential Common Element and is not at the time Sponsor desires to use same, occupied or used for any Building installations or as a common recreational area for the Unit Owners; and (ii) to erect, use, lease, maintain, repair, replace and operate related electronic and other communications equipment in any portion of any mechanical equipment room that is designated a Residential Common Element and is not at the time Sponsor desires to use same, occupied by or used for any Building installations, and the right to erect partitions separating such portion from the balance of such equipment room; in each case, without the consent of, or charge by, the Board or any other Unit Owners; provided, however, that Sponsor (or its designee) shall give prior notice to the Board of Managers of the type and location of any such equipment before installation. Any obligations of Sponsor under any lease, license or other right of use granted by Sponsor with respect to any

roof or the aforesaid mechanical equipment room shall be the obligation solely of Sponsor and not of the Condominium or the Board of Managers and any rights of Sponsor, including, without limitation, the right to receive rent or other consideration for such lease, license or other right of use, shall be the right solely of Sponsor and not of the Condominium. In connection with such easements and related rights, Sponsor and its designee (and their respective successors and assigns) and the respective tenants and licensees shall each have, to the extent necessary or advisable for such erection, use, lease, maintenance, repair, replacement and operation, an easement in common with all Unit Owners for ingress, egress and the use of any Common Elements. The Units shall be subject to such easement. The Unit Owners will not have any interest in the rents, profits or revenues from the rental, use or sale of any such space pursuant to the aforementioned easements and rights.

CONTROL BY THE SPONSOR

Sponsor reserves the right to control the Board of Managers for a period of time until the earlier to occur of (a) thirty (30) days after the date by which one hundred percent (100%) of the Units have been conveyed to Purchasers; or (b) five (5) years after the First Closing (the "Sponsor Control Period"). Sponsor reserves the right to relinquish control of the Board of Managers prior to the expiration of the Sponsor Control Period. A meeting will be held to elect the new board members that are unrelated to Sponsor within thirty (30) days of the expiration of the Sponsor Control Period. However, as long as Sponsor owns a Unit, Sponsor will be entitled to appoint one (1) member of the Board of Managers and shall be entitled to cast one vote for each .0001% of Common Interest attributable to their Unit(s). In the event that there is a Successor Sponsor and Sponsor still owns a Unit, only Sponsor may appoint one (1) member of the Board of Managers.

Sponsor is retaining the unconditional right to rent Units in the Building after consummation of the Offering Plan that are being offered herein. Except for Interim Leases, Sponsor will not rent Units prior to First Closing. Unless this Offering Plan is abandoned, Sponsor will endeavor in good faith to sell Units rather than rent after the Offering Plan has been consummated but makes no representation that it will execute Purchase Agreements to sell more than fifteen percent (15%) of the Units. Twelve (12) Residential Units satisfy the fifteen percent (15%) threshold. As Sponsor's right to rent Units is unconditional, this Offering Plan may not result in the creation of a condominium in which a majority of the Units are owned by owner-occupants or investors unrelated to Sponsor; Sponsor could effectively control the Board indefinitely. The By-Laws do not require that a majority of the Board of Managers be owner-occupants who are unrelated to Sponsor after Sponsor relinquishes control of the Board of Managers, Purchasers for their own occupancy may never gain control of the Board of Managers. Owner-occupants and non-resident owners, such as Sponsor may have inherent conflicts on management of the Condominium.

Sponsor may not exercise veto power over expenses described in Schedule B of Part I of the Offering Plan or expenses required:

(i) to comply with applicable laws or regulations; or
(ii) to remedy any notice of violation; or
(iii) to remedy any work ordered by an insurer; or
(iv) any matter affecting the health or safety of the occupants of the Building.

Sponsor may exercise veto power over expenses other than those described above for a period ending not more than five (5) years after the closing of the first Unit or whenever the Unsold Units constitute less than twenty-five percent (25%) of the common interest, whichever is sooner.

As long as Sponsor or Successor Sponsor shall own one or more Units, the Board of Managers may not, without the prior written consent of Sponsor or Successor Sponsor, in the sole discretion of the Sponsor or Successor Sponsor: (i) amend the Declaration or By-Laws of the Condominium so as to in any way adversely affect Sponsor or Successor Sponsor; or (ii) interfere with the offer, sale or leasing of Units, or construction within the Unit or Units belonging to Sponsor or Successor Sponsor, operation of general or sales and leasing offices on the Property, or with any actions necessary or desirable for construction, renovation, repair, or correction of the

Property or any Unsold Unit, as determined by Sponsor or Successor Sponsor, as the case may be.

Notwithstanding anything to the contrary contained herein, for a maximum of two (2) years from the date of the recording of the Declaration in the City Register's Office, as long as the Sponsor continues to hold fifty-one percent (51%) or more in number of the Units, the Sponsor's prior written consent shall be required in order to amend either the Declaration or the By-Laws. Furthermore, so long as Sponsor or Successor Sponsor shall own Unsold Units constituting twenty-five percent (25%) or more of the Common Interest, or for a period of five (5) years after closing of title to the first Unit, whichever is sooner, the Board of Managers may not, without the prior written consent of the Sponsor, (i) make any addition, alteration or improvement to the Common Elements or to any Unsold Unit, or (ii) borrow money on behalf of the Condominium (except where necessary to perform work required by law to the extent that existing reserves are insufficient), or (iii) provide for new or additional services other than those provided for in Schedule B hereof. Sponsor shall have the right to withhold its consent to any of the foregoing actions except where otherwise noted. Notwithstanding the above, Sponsor's consent shall not be withheld for expenses required to comply with applicable law, to remedy any notice of violation, to comply with any work order of an insurer, or for any matter affecting the health or safety of the occupants of the Building. While Sponsor has voting control of the Board of Managers, Sponsor will not reduce or eliminate the services to be provided to the Condominium as set forth in this Offering Plan.

BOARD OF MANAGERS

Under the By-Laws of the Condominium, the affairs of the Condominium will be managed by a Board of Managers consisting of five (5) persons. However, the Board of Managers will initially consist of one (1) person designated by Sponsor. The initial members of the Board of Managers will be Bentley Zhao, who is the principal of the Sponsor.

The first annual meeting of the Unit Owners shall be called for a date which is no more than one year after the First Closing. At the end of the Sponsor Control Period, the initial member designated by the Sponsor shall resign and the Board of Managers will consist of five (5) persons elected by the Unit Owners. However, as long as Sponsor owns a Unit, Sponsor will be entitled to appoint one (1) member of the Board of Managers and shall be entitled to cast one vote for each .0001% of Common Interest attributable to their Unit(s). In the event that there is a Successor Sponsor and Sponsor still owns a Unit, only Sponsor may appoint one (1) member of the Board of Managers. Each Unit Owner, including the Sponsor or Successor Sponsor, shall be entitled to cast one vote for each .0001% of Common Interest attributable to their Unit(s) on all matters put to a vote at all meetings of the Unit Owners.

The Unit Owners' annual meetings shall be held on or about the anniversary of the date of the first annual meeting. Notice of the annual meeting of Unit Owners or of any special meetings of Unit Owners shall be given by the Secretary, as directed by the Board of Managers, to all Unit Owners not less than ten (10) days or more than thirty (30) days before such meeting. Minutes of all meetings of Unit Owners and all meetings of the Board of Managers shall be kept by the Board of Managers, together with records of all actions taken by the Board of Managers and the financial records of the Condominium. The Board of Managers shall retain an independent certified public accountant to prepare an annual report of the receipts and expenditures of the Condominium, which report shall be promptly sent to each Unit Owner.

Special meetings of the Board of Managers shall be held when called by the President of the Board of Managers as directed by the Board of Managers or upon a petition signed by Unit Owners representing a majority in interest of the Common Elements having been presented to the Secretary of the Board of Managers.

With the exception of those members elected or designated by Sponsor, only a Unit Owner, the principal or officer of a Unit Owner, or the spouse of a Unit Owner not in arrears, with regards to Common Charges, are eligible for election to the Board of Managers. If the Board of Managers perfects a lien against a Unit where the Unit Owner, the principal or officer of a Unit Owner, or the spouse of a Unit Owner is a Board Member, the Board Member shall be removed and replaced as set forth in the By-laws. Except for a member of the Board of Managers designated by Sponsor or Successor Sponsor, members of the Board of Managers may be removed from office, with or without cause, by the affirmative vote of Unit Owners owning, in the aggregate, a percentage of Common Interest in excess of fifty percent (50%). Board of Managers members elected by the Sponsor or Successor Sponsor may only be removed for cause by the affirmative vote of Unit Owners owning, in the aggregate, a percentage of Common Interest in excess of fifty percent (50%), excluding Sponsor's vote. In the event of such removal, the Sponsor or Successor Sponsor shall have the exclusive right to designate a replacement for such removed member of the Board of Managers.

No members of the Board of Managers will receive any compensation from the Condominium for acting as such.

The Board of Managers will be responsible for management and maintenance of the Condominium. It will have the powers and duties necessary for the administration of the affairs of the Condominium and may perform any act necessary to accomplish this, as long as it is consistent with the Declaration, By-Laws, and applicable law. Such acts include (a) determination, collection, and enforcement of the obligations of Unit Owners to pay Common Charges; (b) employment and dismissal of personnel; (c) providing for insurance with respect to Common Elements; (d) adoption of rules relating to use and operation of the Property; (e) hiring of a managing agent and contractors and service companies in connection with the performance of the Board of Managers' responsibilities; (f) establishing an operating budget for the Condominium; (g) maintaining and making all required repairs and replacements to the portions of the Property which is the responsibility of the Board of Managers to maintain and replace; and, (h) on behalf of the Unit Owners, incurring debt on such terms and conditions as the Board of Managers will agree to provide for major and minor maintenance, repairs, additions, improvements, replacements, working capital, bad debts and unpaid Common Expenses, insurance, depreciation, obsolescence and similar purposes (the repayment of any and all such debt may be secured and paid as provided in §339-jj of the New York Real Property Law).

Members of the Board of Managers will have no liability to the Unit Owners or third parties for errors of judgment, negligence, or otherwise, except for errors constituting willful misconduct or bad faith. The Unit Owners will severally indemnify the members of the Board of Managers against any liability or claims except those arising out of their bad faith or willful misconduct, but the liability of any Unit Owner on account of such indemnification will be limited to such proportionate share thereof as the Common Interest of such Unit Owner bears to the aggregate Common Interest of all Unit Owners. In order to limit the liability of the Unit Owners and the members of the Board of Managers, any contract or other commitment made by the Board of Managers will state that it is made by the Board of Managers only as agent for the Unit Owners, that the members of the Board of Managers will have no personal liability on any such contract or commitment (except as Unit Owners), and that the liability of any Unit Owner on any such contract or commitment will be limited to such proportionate share of the total liability thereunder as the Common Interest such Unit Owner bears to the aggregate Common Interest of all Unit Owners.

Any provisions that give Sponsor control of the enforcement of the sponsor's obligations are not lawful. If there are non-Sponsor members of the Board of Managers, and there is a vote on whether to sue Sponsor, Sponsor's board representatives cannot lawfully vote on that issue. See Park River Owners Corp. v. Bangser Klein Rocca & Blum, 269 A.D.2d 313, 703 N.Y.S.2d 465 (1st Dept. 2000); McKinney's Consolidated Laws of the State of New York, General Business Law, Volume 19, pocket part, page 193; and BCL § 713(a)(1). Also of interest is Board of Managers of Fairways at North Hills v. Fairways at North Hills, 193 A.D.2d 322, 603 N.Y.S.2d 867 (2d Dept. 1993), discussed in McKinney's Consolidated Laws of the State of New York, General Business Law, Volume 19, page 160.

Since the Condominium's By-Laws do not require that a majority of the Board of Managers be owner-occupants who are unrelated to Sponsor after Sponsor relinquishes control, Purchasers for their own occupancy may never gain control of the Board of Managers and owner-occupants

and non-resident owners, such as Sponsor, may have inherent conflicts on the management of the Condominium.

Officers

The principal officers of the Condominium shall be a President, Vice President, Secretary and Treasurer, all of whom shall be elected by the Board of Managers.

The President shall be the chief executive officer of the Condominium and shall preside at all meetings of the Board of Managers and of Unit Owners.

The Vice President shall take the place of the President and perform their duties whenever the President shall be absent or unable to act.

The Secretary shall be empowered to take and keep minutes of all meetings and to keep the books and records of the Condominium.

The Treasurer shall be responsible for overseeing the finances of the Condominium and for keeping the financial records and books of the Condominium.

The Board of Managers, in its discretion shall delegate such powers to the officers as it sees fit to execute agreements, contracts, deeds, leases and checks etc. on behalf of the Condominium.

Amendments to Declaration and By-Laws; Termination of Condominium

The By-Laws may be amended at any Unit Owners' meeting provided (a) the notice of meeting contains a full statement of the proposed amendment, (b) the amendment is approved by sixty-seven percent (67%) of the Unit Owners in number and in Common Interest at a duly called meeting of Unit Owners and (c) the amendment is duly recorded as an amendment to the Declaration and By-Laws; provided, however, that any amendment to the By-Laws that is material in nature must be approved by at least fifty-one (51%) of the Registered Mortgagees. No amendment may affect a Unit Owner's interest or the interest of a mortgage holder in a Unit or adversely affect the Sponsor's rights.

The Declaration may be amended by the Board of Managers upon a vote of sixty-seven percent (67%) of the Unit Owners in number and in Common Interest held at a duly called meeting of Unit Owners provided, however, that any amendment to the Declaration that is material in nature must be approved by at least fifty-one (51%) of the Registered Mortgagees.

The Condominium may not be terminated unless at least eighty percent (80%) of the Unit Owners in number and Common Interest and at least fifty-one (51%) of the Registered Mortgagees, if any, of the same Units agree to the withdrawal of the Property from the provisions of Article 9-B of the Real Property Law. The Sponsor or its nominee will not cast any of its votes for withdrawal unless sixty-seven percent (67%) or more of the Unit Owners and at least fifty-one (51%) of the Registered Mortgagees other than the Sponsor so vote, in which event the Sponsor will be free to cast its votes either for or against withdrawal.

Notwithstanding anything to the contrary contained herein, approval of the Registered Mortgagees or Registered Guarantors may be implied when the Registered Mortgagee or Registered Guarantor fails to submit a response to any written proposal for an amendment within sixty (60) days after it receives proper notice of the proposal, provided the notice was delivered by certified or registered mail, with a “return receipt” requested.

RIGHTS AND OBLIGATIONS OF UNIT OWNERS AND THE BOARD OF MANAGERS

Sale or Lease of Units by Unit Owners Subject to Right of First Refusal

Tenants of any lease of a Unit will not be subject to the New York City Rent Law (rent control), the Emergency Tenant Protection Act of 1974, the New York City Rent Stabilization Law or the New York City Rent Stabilization Code, as such laws are presently in effect.

Other than a sale or lease by Sponsor, a successor of Sponsor, a Registered Mortgagee or their assignee, a sale or lease from a Unit Owner to an immediate family member, or a sale or lease from an ownership entity to an affiliate of said ownership entity, any lease or sale of a Residential Unit shall be subject to the Board of Managers' right of first refusal. See Article XII of the By-Laws.

Any contract to sell a Unit, together with the Appurtenant Interests, and any lease of any Unit ("Sale Agreement" or "Lease Agreement") shall contain the following language: "THIS AGREEMENT AND THE RIGHTS AND OBLIGATIONS OF THE PARTIES HEREUNDER ARE HEREBY MADE EXPRESSLY SUBJECT TO THE RIGHTS IF ANY, OF THE BOARD OF MANAGERS OF THE CONDOMINIUM WITH RESPECT TO THE TRANSACTION EMBODIED HEREIN PURSUANT TO THE TERMS OF THE BY-LAWS OF THE CONDOMINIUM, AS THE SAME MAY HAVE BEEN AMENDED." Promptly after such bona fide Sale Agreement or Lease Agreement shall be fully executed, the Unit Owner executing the same ("Offeree Unit Owner") shall send written notice thereof to the Board of Managers by certified or registered mail, or overnight mail, which notice shall be accompanied by a copy of the fully executed Sale Agreement or Lease Agreement, as the case may be, containing all of the terms offered in good faith by the prospective purchaser or tenant ("Outside Offeror"). The sending of this notice shall constitute an offer by the Offeree Unit Owner to sell the Unit, together with its appurtenant interests, or to lease the Unit, as the case may be, to the Board of Managers or to its designee, corporate or otherwise, on behalf of all Unit Owners. The giving of such notice shall further constitute a representation and warranty by the Offeree Unit Owner to the Board of Managers, on behalf of all Unit Owners, that such Offeree Unit Owner believes the Sale Agreement or Lease Agreement to be bona fide in all respects; submission of such notice of Sale Agreement or Lease Agreement shall, in the sole discretion of the Board of Managers, be irrevocable. Thereafter, upon the written demand, the Offeree Unit Owner shall submit to the Board of Managers, in writing, such further information with respect to the Outside Offeror and the Sale Agreement or Lease Agreement as the Board of Managers may reasonably request.

The Board of Managers may elect, by sending written notice thereof to the Offeree Unit Owner by certified or registered mail, or overnight mail, not later than thirty (30) days (in the event of a proposed sale) and fifteen (15) business days (in the event of a proposed lease) after receipt of (i) the notice referred to in paragraph above, or (ii) all other information reasonably required by the Board of Managers, whichever is later, to purchase or lease the Offeree Unit, as the case may be, on behalf of all Residential Unit Owners upon the same terms and conditions as were contained in the Sale Agreement or Lease Agreement. Notwithstanding anything to the contrary contained herein, however, the Board of Managers shall not exercise any option set forth in this Article to purchase or lease any Residential Unit without the prior approval of a Majority of Residential Unit

Owners by number. The Board of Managers may use the Unit for any use permitted under the Declaration or these By-Laws.

In the event the Board of Managers fails to exercise its right of first refusal within the time period set forth in paragraph above, the Offeree Unit Owner shall be free to consummate the transaction upon the same terms and conditions embodied in the Sale Agreement or Lease Agreement within sixty (60) days after (i) notice of refusal is sent to the Offeree Unit Owner by the Board of Managers, or (ii) the expiration of the period in which the Board of Managers might have accepted such offer, as the case may be. If the Offeree Unit Owner shall fail to consummate the transaction upon the same terms and conditions embodied in the Sale Agreement or Lease Agreement within such sixty (60) day period, then, should the Offeree Unit Owner thereafter elect to sell such Residential Unit or to lease such Unit, the Offeree Unit Owner shall be required again to comply with all of the terms and provisions above, but not more often than once in any twelve (12) month period. The Board of Managers shall have the right to waive this requirement for good cause shown, in its sole discretion.

The Board of Managers shall not discriminate against any person on the basis of race, creed, color, national origin, sex, age, disability, marital status, or other grounds prohibited by law in exercising its right of first refusal set forth herein.

In the event the Board of Managers does exercise its right of first refusal with respect to the sale of a Residential Unit, the acquisition of the Unit may be made from the working capital and Common Charges, or, if such funds are insufficient, the Board of Managers may assess each Residential Unit Owner, other than the offering Unit Owner, in proportion to each Residential Unit Owner's percentage of Common Interest, or may borrow money to finance such acquisition. The sole security which may be given for any funds so borrowed is the Unit to be acquired. The Board of Managers may also assess each Residential Unit Owner, as provided above, for Common Charges for the Unit, or the rent due pursuant to the Lease, and for the cost of maintenance and repairs to such Unit. Neither the Board of Managers nor any Residential Unit Owner shall be entitled to cast any votes attributable to such Residential Unit.

Notwithstanding the above, the right of first refusal held by the Board of Managers shall not adversely impact the rights of a mortgagee or its assignee to:

a. foreclosure or take title to a unit pursuant to the remedies in the mortgage;
b. accept a deed or assignment in lieu of foreclosure in the event of default by a mortgagor; or
c. sell or lease a unit acquired by the mortgagee or its assignee.

In the event any provision in this section conflicts with (a) through (c) above, the rights of the Registered Mortgagee as set forth herein shall control.

All leases of Residential Units must be for a minimum period of one (1) year (with each such lease being to a specific named tenant and with no right to substitute any other tenant during the term of the lease). All such leases shall be consistent with the By-Laws and shall contain such reasonable conditions as the Board of Managers may impose in order to protect the physical and financial security and continuity of the Condominium, including (but not limited to) the following

provisions:

(a) the lease may not be modified, amended, extended or assigned, without the prior written consent of the Board of Managers;
(b) the tenant may not sublet the demised premises, or any part thereof, without the prior written consent of the Board of Managers;
(c) the Board of Managers shall have the right to terminate the lease on not less than thirty (30) days prior written notice upon foreclosure of the lien granted by §339-z of the New York State Real Property Law; and
(d) the lease must contain an attornment provision that conforms with the provisions §339-kk of the Real Property Law.

The Board of Managers may establish other reasonable regulations governing leases of Residential Units from time to time. Except as set forth above, the form of any such lease shall be substantially in the then current form of apartment lease recommended by The Real Estate Board of New York, Inc. or New York City Bar Association with such modifications as may be approved in writing by the Board of Managers. The foregoing restrictions on leasing and the contents of leases contained herein shall not apply to a Residential Unit owned by Sponsor, or a Successor Sponsor, or a Residential Unit owned by a mortgagee who took title for its own account in foreclosure or by deed in lieu of foreclosure.

Prohibition Against Advertising.

Purchaser covenants and agrees that it shall not list the Unit for sale, resale or lease with any broker or otherwise advertise, promote, or publicize the availability of the Unit for sale, resale or lease prior to the closing of title and for one (1) year thereafter. Any such listing of the Unit or form of advertising, promotion or publicizing of the Unit by Purchaser or its agents or representatives prior to the closing of title shall be an Event of Default under the Purchase Agreement, entitling Sponsor to the remedies set forth in Article 12 of the Purchase Agreement. These provisions shall survive the closing of title.

Mortgaging of Units by Unit Owners

Each Unit Owner has the right to mortgage their Unit, provided that (i) the mortgage shall be substantially in the form of the New York statutory form of mortgage, (ii) the Board of Managers is notified in writing of the making of the mortgage and receives a conformed copy of the mortgage and note, (iii) the mortgage states that if consent by the mortgagee is required to any amendment to the Declaration and By-Laws such consent will not be unreasonably withheld or delayed, and (iv) the Unit Owner making such mortgage first pays all assessments and Common Charges previously assessed by the Board of Managers against the Unit, and satisfies all unpaid liens against the Unit, except for the lien of a Permitted Mortgage. Notwithstanding the foregoing, the Sponsor and Successor Sponsor shall have the right to mortgage their Units without restriction or limitation, but any such mortgage shall contain the representations in clauses (iii) and (iv) of this paragraph (if applicable). The Unit Owner will be responsible for interest and amortization payments on the mortgage encumbering such Unit Owner's Unit. A Unit will not be subject to the lien of any mortgage placed by other Unit Owners on their Units.

Common Charges and Assessments

The Board of Managers will prepare and furnish its budget to the Unit Owners from time to time and at least once a year. Based upon such budget and any modifications thereof approved by the Board of Managers, the Unit Owners will be charged for the cost of the operation of the Condominium in accordance with their percentage of interest in the Common Elements. The Board of Managers may commence the collection of Common Charges upon the closing of title to the first Unit or thereafter in such amount as will be necessary to carry out the duties of the Board of Managers, as set forth in this Offering Plan. Such Common Charges shall be paid by the Unit Owners and by Sponsor as Owner of Units that have not been sold to bona fide Purchasers. Each Unit Owner will be responsible to pay the Common Charges allocable to their Unit monthly in advance on the first day of each month, commencing with the closing of title to their Unit. Common Charges assessed during the month in which title closes shall be adjusted between the Purchaser and the Sponsor as of the Closing Date, if collection of Common Charges has commenced on or before said date.

The Common Charges assessed by the Board of Managers, in addition to covering the cost of repairing and maintaining the Common Elements including but not limited to, fire and liability insurance covering the Condominium, electricity for the Common Elements, water, audit and legal expenses and reserves for capital expenditures, may include, in the discretion of the Board of Managers, other reserves, working capital and other sums necessary to carry on the affairs of the Condominium.

The Common Charges will not include maintenance, repairs or decoration of any Units or portions thereof (except for structural repairs and Units acquired by the Board of Managers), payments required pursuant to the terms of any Unit Owner's mortgage, or real estate taxes covering the individual Units.

The liability of each Unit Owner for the payment of the Common Charges thereafter assessed or becoming due against their other Unit, shall terminate upon a permissible sale, transfer or other conveyance of such Unit together with the appurtenant interest in the Common Elements made by him or her in accordance with the applicable provisions of the By-Laws. In addition, any Unit Owner may, subject to the terms and conditions specified in the By-Laws, convey their Unit together with the appurtenant interest to the Board of Managers or its nominee on behalf of all other Unit Owners, without any compensation, and in such event shall be exempt from Common Charges thereafter assessed. A Purchaser of a Unit shall be required by the Board of Managers to pay unpaid Common Charges assessed against the Unit prior to their acquisition, except that a mortgagee acquiring title to the mortgaged Unit or a Purchaser at a foreclosure sale shall not be liable for such charges and the Unit shall not be subject to a lien for the payment of the Common Charges assessed prior to the acquisition of title thereto by a mortgagee or Purchaser at a foreclosure sale. However, such mortgagee or Purchaser at a foreclosure sale shall be liable for payment of all Common Charges after the acquisition of title. After the Board of Managers files a lien for unpaid Common Charges and in the event the lien is foreclosed by the Board of Managers, if the proceeds of the foreclosure sale shall not be sufficient for the payment of such unpaid Common Charges or if a Unit is acquired by a mortgagee or Purchaser in foreclosure, the unpaid balance shall be charged to all Unit Owners as a Common Expense. If there is any surplus remaining from the proceeds of a foreclosure sale after payment of the indebtedness and all the

expenses of the sale, the surplus shall be paid to the Unit Owner.

Pursuant to §339-z of the Condominium Act, the Board of Managers, on behalf of the Unit Owners, will have a lien on each Unit for unpaid Common Charges assessed by the Board of Managers. Under §339-aa of the Condominium Act, a lien for non-payment of Common Charges will be subordinate only to liens for real estate taxes and to sums unpaid on a first mortgage of record on the Unit. Any lien for unpaid Common Charges against a Unit shall be effective from and after the filing of a notice thereof in the office of the County Clerk in Kings County, and until all sums secured thereby, with the interest accrued thereon at twelve percent (12%) per annum shall have been fully paid or until six (6) years from the date of filing (unless foreclosure of such lien is started within such six (6) year period), whichever is earlier. The lien may be foreclosed by a suit brought in the name of the Board of Managers acting on behalf of the Unit Owners, similar to a foreclosure of a mortgage on real property, or an action may be brought by the Board of Managers to recover the unpaid Common Charges, without necessarily filing the lien. Sponsor will cause the Board of Managers to file a lien, as provided in §339-aa of the Condominium Act, on Units in which a Purchaser is more than ninety (90) days in arrears of Common Charges while it is in control of the Board of Managers. Sponsor will cause the Board of Managers to file a lien, as provided in section 399-aa of the Condominium Act, on Units in which Sponsor is more than thirty (30) days in arrears of common charges while it is in control of the Board of Managers.

Pursuant to §339-kk of the Condominium Act, if a non-occupying owner rents any Unit to a rental tenant and then fails to make payments due for Common Charges, assessments or late fees for such Unit within sixty (60) days of the expiration of any grace period after they are due, upon notice in writing, all rental payments from the tenant shall be directly payable to the Condominium Association.

If the Common Charges, assessments or late fees due for any Unit have not been paid in full, within sixty (60) days after the expiration of any grace period of the earliest due date, the Board of Managers shall provide a timely written notice to the tenants, the non-occupying owner, the Registered Mortgagee, and the Registered Guarantor, providing that, commencing immediately and until such time as all payments for common charges, assessments or late fees are made current, all rental payments due subsequent to the issuance of such notice are to be made payable to the condominium association at the address listed on the notice. Where a majority of the Board of Managers has been elected by and from among the Unit Owners who are in occupancy, the Board of Managers may elect not to require that rental payments be made payable to the Condominium. At such time as payments for common charges, assessments and late fees from the non-occupying owner are once again current, notice of such fact shall be given within three (3) business days to the rental tenant and non-occupying owner. Thereafter all rental payments shall be made payable to the non-occupying owner or a designated agent. A non-occupying owner who disputes the Condominium's claim to rental payments pursuant to this section shall be entitled to present facts supporting such owner's position at the next scheduled meeting of the Board of Managers, which must be held within thirty (30) days of the date that such Board of Managers receives notice that such owner seeks to dispute such claim. Nothing in this section shall limit any rights of Unit Owners or of the Board of Managers existing under any other law or agreement. Payment by a rental tenant to the Condominium Association made in connection with this section shall relieve that rental tenant from the obligation to pay such rent to the non-occupying owner and shall be an absolute defense in any non-payment proceeding commenced by

such non-occupying owner against such tenant for such rent.

Notwithstanding the foregoing, any first mortgagee who obtains title to a condominium unit pursuant to the remedies in the mortgage or through foreclosure will not be liable for the Unit's unpaid regularly budgeted dues or charges accrued before acquisition of the title to the Unit by the mortgagee. If the Condominium Associations lien priority includes costs of collecting unpaid dues, the lender will be liable for any fees or costs related to the collection of the unpaid dues.

Sponsor is reserving the right to delay the collection of Common Charges. During any such period of delay, the Sponsor will timely pay all expenses of the Condominium, including, but not limited to, insurance premiums and any reserve fund payments required by lenders. Such expenses shall not include individual Unit Owner expenses such as real estate taxes, utility charges, etc. Upon commencement of collection of Common Charges, there will not be an assessment for any item in the approved budget for the Condominium. Regardless of the delay in collection of Common Charges, Sponsor shall remain obligated to update the budget for the Condominium as required by Department of Law governing regulations. In the event Sponsor elects to delay the collection of Common Charges, Sponsor shall disclose such fact in the closing notice or statement to Purchasers. Thereafter, Sponsor shall also disclose such fact in the post-closing amendment to the Offering Plan as a benefit to subsequent purchasers. Such amendment shall also disclose the anticipated period of delay. Prior to commencing the collection of Common Charges, Sponsor will notify all unit owners by written notice of the expiration of the delay period. Notice shall be given to owners in writing at least thirty (30) days prior to the commencement of collection of Common Charges. Thereafter, Sponsor will disclose such fact in the next substantive amendment to the Offering Plan as a benefit to subsequent purchasers.

Additions, Alterations, Improvements, and Repairs

Generally, all painting, decorating, maintenance, repairs and replacements in or to (a) any Unit including Limited Common Elements to the Unit (other than to the Common Elements contained therein), will be made by the Unit Owner at the Unit Owner's sole cost and expense; and (b) in or to the Common Elements will be made by the Board of Managers and the cost thereof will be a Common Expense.

No Unit Owner may make any addition, alteration or improvement to the Common Elements.

No Unit Owner shall make any addition, alteration, repair or improvement in their Unit, Limited Common Elements, or to the Common Elements appurtenant to their Unit, without the prior written approval of the Board of Managers, which approval will not be unreasonably withheld, provided that the addition, alteration, repair or improvement may be made while retaining the structural integrity of the Building. Notwithstanding anything to the contrary contained herein, Sponsor shall be permitted to make any lawful alterations to Unsold Units without the consent of the Board of Managers except for structural alterations that would have a material effect on the structural integrity of the Building. In addition, no such additions, alterations or Unit Owner's improvements may be made unless the consent of the Unit mortgagee (if any) is obtained, if such consent is required under the terms of the Unit Owner's mortgage. Except as

otherwise provided with respect to alterations by the Sponsor or Successor Sponsor, no application shall be filed with the New York City Buildings Department or with any other governmental authority for a permit covering an addition, alteration or improvement to be made in a Unit unless approved in writing executed by the Board of Managers. Such execution shall not subject the Board of Managers or any of its members to any liability to any contractor, subcontractor, material man, architect or engineer, by reason of such addition, alteration or improvement or to any person having any claim for injury to person or damage to Property arising therefrom. If requested by the Board of Managers, a Unit Owner shall indemnify the Board of Managers for loss, damage or liability resulting in any way from execution of any such documents executed by the Board of Managers or any of its Members.

Prior to and as a condition of granting consent to the making of an alteration, addition, repair or improvement to a Unit, the Board of Managers may require the Unit Owner to deliver plans and specifications to the Board of Managers and to execute an agreement in the form required by the Board of Managers, setting forth the terms and conditions under which the proposed work is to be done, including, without limitation the days and hours during which the work is to be done. The Unit Owner shall also provide the Board of Managers, if required, with a copies of all insurance policies in the form required by the Board of Managers insuring all work to be performed by the Unit Owner and naming the Condominium and mortgagee, if applicable, as an additional insured.

The public areas of the Condominium and those residential areas exposed to public view or other Unit Owners shall be kept in good appearance, in conformity with the dignity and character of the Building, as determined by the Board of Managers in its sole discretion, by (i) the Board of Managers, with respect to such parts of the Building required to be maintained by the Board of Managers, and (ii) each Unit Owner with respect to interior surfaces of windows and shades, venetian or other blinds, drapes, curtains, or other window decorations in or appurtenant to such Unit Owner's Unit. To promote a consistent appearance of the Building from the outside, no Residential Unit Owner shall be permitted to enclose, erect a greenhouse, and/or alter a terrace or balcony appurtenant to a Unit in such a way that will alter the conformity of the Building, without the prior written approval of the Board of Managers. The Board of Managers may issue regulations concerning the size, type, and color of window treatments to be installed on the windows of Units in other to provide a visually harmonious appearance. The Board of Managers may limit the types of personal items, furnishings, and plantings that may be placed on terraces or balconies appurtenant to a Unit.

All maintenance, repairs and replacement of the Common Elements of the Property, including, but not limited to, exterior walls, roof and roof members as well as all maintenance, repairs and replacements to any pipes, wires, conduits and public utility lines, any portion of which is located in one Unit and services another Unit or more than one Unit or so much of any pipes, wires, conduits and public utility lines as are located in the Common Elements but serve one or more Units shall be made by the Board of Managers and the cost thereof shall be a Common Expense, except where such repair or replacement is necessitated by the negligence, misuse or neglect of a Unit Owner, in which event the cost and expense shall be assessed to and paid for by such Unit Owner, together with an administrative expense equal to 20% of all costs in connection therewith. All repairs, replacements, painting or maintenance, whether made by the Unit Owner or by the Board of Managers to the doors, windows, or the exterior surface of any Building,

including roofs, or to portions of the Building exposed to public view or other Unit Owners shall be carried out in such a manner so as to conform to the materials, style and color initially provided by the Sponsor.

In the event that a Unit Owner fails to make any maintenance replacements or repair, which maintenance, replacements or repair is necessary to protect any of the Common Elements, any other Unit, or, in the event of service of a violation notice covering the Unit upon the Board of Managers from a governmental authority having or asserting jurisdiction, the Board of Managers shall have the right to make such maintenance, replacements or repair (after the failure of the Unit Owner to do so after ten (10) days' written notice, or written or oral notice of a shorter duration in the event of an emergency situation) and to charge the Unit Owner for the cost of all such repairs, replacements, and/or maintenance, together with an administrative expense equal to 20% of all costs in connection therewith. In the event that the Board of Managers charges a Unit Owner for repairs, replacements or maintenance to their Unit or for repairs to any Common Elements, and the Unit Owner fails to make prompt payment, such charges shall be considered as additional Common Charges due from said Unit Owner, and the Board of Managers shall be entitled to bring suit to compel payment. In the event the Board of Managers brings a suit, the Unit Owner shall be liable for the reasonable attorneys' fees and cost of such suit or proceeding together with interest on all sums due.

Windows to a Unit, including window glass and window frames, and entrance doors to a Unit or Limited Common Element shall be repaired and replaced by the Unit Owner at the Unit Owner's cost and expense unless otherwise decided by the Board of Managers or by vote of Unit Owners to clean, repair, or replace the windows and/or doors of multiple Units, in which case such cost and expense shall be a Common Expense.

The Board of Managers and/or any agent of the Board of Managers shall have the right of access (which right shall be an easement) to inspect any Unit for the purpose of making any repairs or replacements to any of the Common Elements contained in such Unit or appurtenant to such Unit, or elsewhere in the Building, or to remedy any condition which would result in damage to any other Unit or to the Common Elements, or which would violate the provisions of any mortgage covering another Unit, or for the purpose of removing violations or curing defaults by Unit Owners, or for the purpose of complying with any laws, orders, rules or regulations of any governmental body having jurisdiction thereof. Such right of access shall be exercised in such manner as will not unreasonably interfere with the use for which the Unit was intended. Such entry shall be permitted on not less than two (2) days' notice, except that no notice will be necessary in the case of an emergency.

There is no known mold growth at the Property. Purchasers are advised that the prevention of the growth of mold in a Unit is the responsibility of each Unit Owner. Construction is not, and cannot be, designed to exclude mold spores. Whether a Unit Owner experiences mold growth depends largely on how such Unit Owner manages and maintains their Unit. Unit Owners will need to take actions to prevent conditions which cause the mold or mildew, and it is the responsibility of each Unit Owner to ensure that they take the necessary precautions to prevent mold from becoming a problem in such Unit Owner's Unit. Unless the existence of mold occurs within one (1) month or earlier of Closing (unless there is a latent defect due to faulty construction by Sponsor so that mold could not be discovered within one (1) month of Closing), and is caused

by faulty construction by Sponsor, Sponsor will not be liable to Purchaser with respect to the presence and/or existence of molds, mildew and/or microscopic spores. This provision shall survive closing of title.

Insurance

The Board of Managers shall obtain and maintain, to the extent obtainable, fire insurance, including water damage, insuring the Building, including all of the Units and the bathroom and kitchen equipment initially installed therein by the Sponsor, together with all heating, air conditioning equipment and other service machinery contained therein (but not including wall, ceiling or floor decorations or coverings, or furniture, furnishings, fixtures, equipment or other personal property supplied or installed by Unit Owners), covering the interest of the Condominium, the Board of Managers and all Unit Owners and their mortgagees, as their interests may appear, in an amount equal to the full replacement value of the Building (exclusive of the cost of excavations, pilings and foundations). Each of such policies shall contain a New York Standard Mortgagee Clause in favor of each mortgagee of a Unit which shall provide that the loss, if any, thereunder shall be payable to such mortgagee as its interest may appear, subject, however, to the loss payable provisions in favor of the Board of Managers and the Insurance Trustee hereinafter set forth, and such other insurance as the Board of Managers may determine.

The amount of fire insurance to be maintained on the Building upon the transfer of title to all Units and until the first meeting of the Board of Managers following the first annual meeting of the Unit Owners will not be less than one hundred percent (100%) of replacement value of the Building. The Board of Managers shall review the amount of fire insurance annually. Although there is no requirement for annual appraisals to ascertain whether the insurance coverage is adequate, such appraisals are required prior to renewal of any fire policy.

The Board of Managers will arrange for repair of the Units in the event of a casualty loss. In the event the insurance proceeds are not sufficient to cover the cost of repairs to the Units, the balance of the cost of such repairs will be assessed against all Unit Owners. For further provisions regarding repair or reconstruction of Units after fire, casualty or condemnation see Article Seven of the By-Laws which provides, among other things, for Unit Owners' approval to reconstruct in the event seventy-five percent (75%) or more of the Units are destroyed or substantially damaged. In the event of a casualty loss, the Unit Owner will continue to pay the Common Charges on their Unit.

The proceeds of all policies of physical damage insurance carried by the Board of Managers shall be payable to the Board of Managers in the event of a casualty loss amounting to $100,000 or less, and to the "Insurance Trustee" if the loss shall amount to more than $100,000 to be applied for the purpose of repairing, restoring or rebuilding the Building unless otherwise determined by the Unit Owners, as hereinafter set forth. The Insurance Trustee shall be designated by the Board of Managers and shall be a bank or trust company located in the State of New York. Until such time that the mortgage lien held by the Sponsor's remains outstanding, the Lender shall act as Insurance Trustee.

The comprehensive general liability insurance policy to be maintained until the first meeting of the Board of Managers following the first annual meeting of the Unit Owners, will have

a limit of $1,000,000, covering all claims arising out of any one occurrence in the Common Elements and a limit of $2,000,000 in the aggregate, a portion of which may be covered via an umbrella policy.

The cost of all such insurance and the fees and expenses of the Insurance Trustee shall be paid by the Board of Managers and shall constitute a Common Expense. The Board of Managers may also obtain and maintain, to the extent obtainable: (1) fidelity insurance covering all officers and employees of the Condominium who handle Condominium funds; (2) worker's compensation insurance; and (3) in order to limit the liability of Unit Owners for personal injury and tort, comprehensive general liability insurance covering each Member of the Board of Managers and each Unit Owner for such amounts as the Board of Managers may deem proper. The Board of Managers shall review such limits once each year. See Schedule B for the estimated cost of insurance for the Condominium for the First Year of Operations.

All policies of physical damage insurance shall contain waivers of subrogation and of any reduction of pro-rata liability of the insurer as a result of any insurance carried by Unit Owners or the invalidity arising from any acts of the insured or any Unit Owners and shall provide that such policies may not be canceled or substantially modified without at least ten (10) days prior written notice to all of the Unit Owners, and Registered Mortgagees and Registered Guarantors. Duplicate originals of all policies of physical damage insurance and of all renewals thereof, together with proof of payment of premiums, shall be delivered to all mortgagees of Units at least ten (10) days prior to expiration of the current policies.

In addition to the insurance set forth herein, Unit Owners must obtain supplemental or additional insure their personal effects and the interior of the Unit itself for fire and liability. Such insurance commonly referred to as an "HO-6 Policy," will be paid for by the Purchaser. Unit Owners shall not be prohibited from carrying other insurance for their own benefit provided such policies contain waivers of subrogation and further provided that the liability of the carriers issuing insurance procured by the Board of Managers shall not be affected or diminished by reason of any Unit Owner's other insurance.

The Board of Managers is not required to obtain or maintain any insurance with respect to any personal property contained in a Unit. A Unit Owner shall, at the Unit Owner's own cost and expense, obtain and keep in full force and effect (a) comprehensive personal liability insurance against any and all claims for personal injury, death, or property damage (including, but not limited to, loss due to water damage) occurring in, upon, or from the Unit or any part thereof, with minimum coverage as established by the Board of Managers from time to time and (b) owner's "all-risk" property insurance in respect of property damage occurring in, upon, or from the Unit or any part thereof (including, but not limited to appropriate coverage for additions, alterations, improvements, and betterments and loss due to water damage). The insurance required above shall be written in form reasonably satisfactory to the Board of Managers by good and solvent insurance companies of recognized standing, admitted to do business in the State of New York. Upon ten (10) day's written notice from the Board of Managers or the Managing Agent, the Unit Owner shall deliver to the Board of Managers a duplicate original of the aforesaid policies, certificates evidencing such insurance or such other confirmation satisfactory to the Board of Managers. The Board of Managers and the Managing Agent shall not be responsible for ensuring that Unit Owners are insured and shall have no liability for the failure of a Unit Owner to have insurance. To the

extent either party is insured for loss or damage to property, each party will look to their own insurance policies for recovery. In the event a Unit Owner fails to obtain the requisite insurance or deliver evidence of same to the Board of Managers, as required, the Board of Managers may, in its sole and absolute discretion, (i) obtain such insurance on behalf of said defaulting Unit Owner or (ii) impose such fines and penalties as the Board of Managers may determine in its sole discretion, including without limitation, a per diem penalty for each day that the Unit Owner does not provide evidence of coverage and in either event such sums shall, for all purposes, constitute Common Charges payable by such Unit Owner. Sponsor will maintain commercially reasonable insurance coverage for each of the Units owned by Sponsor after closing.

Restrictions on Occupancy and Use

Restrictions on and conditions for occupancy of Units, including aesthetic controls and limitations on business and professional use, appear in the Rules and Regulations appended to the By-Laws in Part II of the Offering Plan. In addition, the Units will be restricted to residential uses as well as "home occupation" uses as defined in the Zoning Resolution in Section 12-10. Home occupations cannot have more than one (1) employee and not more than twenty-five percent (25%) of a Unit's space may be dedicated to such use.

The following uses are prohibited for any Unit; any use that in the reasonable judgment of the Board of Managers would impair or threaten the structural integrity of the Building or the life, health, safety, protection, or security of Unit Owners, tenants, or occupants of Units; any use that violates applicable laws; any use that results in, or in the reasonable judgment of the Board of Managers would result in, the cancellation or notice of cancellation of insurance maintained by the Board of Managers; any use that increases, or in the reasonable judgment of the Board of Managers would increase, the rate of insurance for the Property above the rate in effect at the date of recording the Declaration, unless the Unit Owner reasonable for such increase pays the additional premium therefor as a specially allocated expense; any use inconsistent with or in violation of its permitted use or in the reasonable judgment of the Board of Managers is an unreasonable and substantial annoyance or nuisance to a Unit Owner or tenant of a Unit or an unreasonable, substantial, and repeated interference with the peaceful possession or proper use and enjoyment of another Unit or the Common Elements for their intended or permitted purposes as stated in the Declaration and By-Laws; any use of the Common Elements causing or comprising waste; any use involving the storage, purchase, sale, disposal, or release or other disposition of any hazardous, toxic, or radioactive material, matter, substance, or waste that is or becomes regulated under applicable law (unless the products are properly used and stored in accordance with applicable law); any use of a Unit or any portion thereof by any international organization, unless such international organization waives its sovereign or diplomatic immunity in conformity with the terms of the Declaration; any change in use that would require a new or amended Certificate of Occupancy that would affect the permitted use of another Unit; or any of the following uses:

- an establishment of any type or nature which uses any portion of a Unit (i) to sell, afford, or permit on premises sexual stimulation or sexual liaisons; (ii) to permit or present obscene, nude, or semi-nude performances, modeling, or sexual services, (iii) to sell or display "rubber goods" or other sexual or erotic products not commonly found in national chain pharmacies; or (iv) to sell, display, rent, or permit the viewing of "X" rated videos, photographs, books, products, or other

material

- a facility for the sale of paraphernalia for the use of illicit drugs or controlled substances not commonly found in national chain pharmacies
- an office, clinic, or other facility for drug rehabilitation or treatment center
- a military recruitment office
- a homeless shelter, soup kitchen, or similar use
- any form of spiritualist services, such as a gypsy, fortune teller, palm reader, or card reader
- a laboratory or facility which creates or handles medical or toxic waste
- a funeral parlor, chapel, or facility for the sale or display of tombstones or monuments or other death-related business, including cremation or euthanasia
- a labor union
- a messenger service
- a warehousing or storage facility
- a dry cleaning or other laundry facility or any business that uses toxic chemicals in the normal course of business
- a dating or escort service
- an office or other facility for any local, state, or federal governmental agency
- any use of "barkers" or other similar outdoor solicitation
- a pawn shop
- an off-track betting parlor
- the sale or grooming of pets
- the use or storage of flammable liquids, chemicals, or other incendiary or explosive items, unless incidental to a permitted use and commonly used for cleaning, operating or the like
- a massage parlor

A summary of some of the rules governing the occupancy and use of Units follows:

Owners of a Unit, members of their families, their employees, guests and their pets shall not use or permit the use of the Premises in any manner which would be illegal or disturbing or a nuisance to other said Owners, or in such a way as to be injurious to the reputation of the Condominium. Sponsor shall not use or permit the use of the Premises in any manner which would be illegal.

No Unit Owner shall paint the exterior surfaces of the windows and doors opening out of their Unit.

No Unit Owner or any of their agents, servants, employees, licensees, or visitors shall at any time bring into or keep in their Unit any inflammable combustible or explosive fluid, material, chemical or substance, except for normal household use.

No Unit Owner shall make or permit any disturbing noises in their Unit, or do or permit anything to be done therein, which will interfere with the rights, comforts or conveniences of other Unit Owners. No Unit Owner shall play upon or suffer to be played upon any musical instrument, or operate or permit to be operated a computer for purposes of listening to music, phonograph, tape, radio or television set or similar loud device in such Owner's Unit between the hours of 12:00

Midnight and the following 7:00 A.M. if the same shall reasonably disturb or annoy other occupants of the Building and in no event shall practice or suffer to be practiced either vocal or instrumental music between the hours of 10:00 P.M. and the following 9:00 A.M.

No garments, rugs, etc., shall be hung from the windows or from any part of the Building or balconies or clotheslines strung, on, across or over the Common Elements or the Limited Common Elements (including any irrevocably restricted areas).

No sign of any kind shall be displayed to the public view on or in any Unit.

No birds, animals or reptiles, except dogs or cats, shall be permitted in any Unit unless the same shall have been expressly permitted in writing by the Board of Managers or the Managing Agent, and such permission shall be revocable at any time by the Board of Managers or Managing Agent in their sole discretion. In no event shall more than two (2) animals be permitted in any Unit. No pet shall be permitted in the Common Elements, including dogs and cats, unless carried or on a leash.

Smoking and using electronic cigarettes is prohibited at all times in all enclosed common areas of the Building, as required by law. Enclosed common areas of the Building include, but is not limited to, indoor Common Elements such as a lobby, hallway, and stairway. Smoking and using electronic cigarettes is permitted at all times in all dwelling units and outdoor areas, unless otherwise restricted by law. This policy applies to any person on the premises. Complaints about violations shall be made promptly to the Board of Managers. Complaints should be made in writing and should be as specific as possible, including the date, approximate time, location where smoke was observed, description of incident, and apparent source of smoke. Unit Owners shall provide to prospective buyers or renters of their Units a copy of this Smoking Policy including by annexing it to any contract of sale or lease of their Unit.

No Unit Owner shall leave or permit any personal property (i.e., bicycles, carriages, etc.) to be left in the hallways, corridors, lobby or other common areas or to be left on the terraces, unless in a place specifically designated for same, by the Board of Managers or the Managing Agent.

Limited Common Elements are Common Elements existing for the sole use and enjoyment of certain Unit Owners to the exclusion of all other Unit Owners. Limited Common Elements include but are not limited to any facilities (pipes, shut-off valves, wires, lines, conduits) that exclusively serve a Unit that are located behind its boundary walls or within its boundary walls but not readily accessible without damage to such boundary walls, balconies, terraces, or yards that are allocated for the exclusive use of an appurtenant Unit, as set forth in the Floor Plans.

Each Unit Owner of a Unit to which a Limited Common Element is appurtenant shall be responsible for the cost and performance of all painting, decorating and non-structural ordinary maintenance, repairs, cleaning and replacements to such Limited Common Element, including pipes, wires, and conduits exclusively servicing the Unit. However, any structural or non-ordinary repairs or replacements to a Limited Common Element shall be made by the Board of Managers, and the cost and expense thereof shall be charged to all Unit Owners as a Common Expense unless the need for such repair or replacement was caused by the wrongful or negligent act or omission

of a Unit Owner or their tenants, guests, or invitees whereby the cost shall be charged to such Unit Owner. The Board of Managers shall have the right of access to, in, and through these areas for the purpose of doing building maintenance inspections. No structures of any kind may be erected on Limited Common Elements without the express written permission of the Board of Managers, except for temporary structures. Notwithstanding anything herein to the contrary, a Unit Owner who wishes to paint, decorate or make any other changes to a Limited Common Element appurtenant to their Unit, and which change deviates from the Limited Common Element as it was originally delivered by Sponsor, must first obtain express written permission from the Board of Managers; for as long as Sponsor owns at least one Unit, a Unit Owner must also obtain express written permission from the Sponsor.

Limited Common Elements and any cellar spaces are considered uninhabitable space and may not be legally used as a bedroom or living room and to do so may result in a building code violation being issued for the Building. Any cellar space has less light and air than ordinary living space and is more susceptible to dampness. Refer to Schedule A for the amount of Limited Common Elements available to each Unit Owner.

The provisions set forth above shall not be applicable to the Sponsor, however Sponsor must still comply with applicable laws. For so long as Sponsor owns at least one Unit, the Sponsor and its nominees and agents shall have the right and privilege to maintain general and local sales offices in and about the Condominium, including any model Units located within the Condominium Building or elsewhere throughout the Property, and shall have the right and privilege to have their representatives, employees and agents present on the Condominium premises to show the Units to prospective Purchasers, to utilize the Common Elements and without limitation, to do any and all things necessary and incident to the sale of the Units, without charge or contribution other than in the form of Common Charge payments as otherwise provided for herein. The foregoing right is limited to Common Elements and Unsold Units and Sponsor shall not unreasonably interfere with Unit Owners' use and enjoyment of their Units and Limited Common Elements.

For so long as Sponsor owns at least one Unit, the Sponsor shall have the right to continue to employ signs of its choice upon the Condominium premises in its efforts to market and sell the Units. Incident to the rights and privileges provided for herein, the officers, employees, agents, contractors, guests and invitees of the Sponsor, its successors and assigns, shall have the right of ingress and egress to and throughout the Common Elements of the Condominium. The Sponsor shall have the right to use Common Elements and Limited Common Elements in the construction, repair or otherwise in connection with the building and maintenance of the Building.

The Board of Managers shall sign any application or other document required to be filed with any governmental authority having or asserting jurisdiction in connection with any such addition, alteration or improvement made by Sponsor or Successor Sponsor to any Unit, provided, however, that neither the Board of Managers nor the Unit Owners shall be subjected to any expense or liability by virtue of the signing of the application or such other document. A copy of any such application or other document will be furnished to the Board of Managers. However, Sponsor shall not make any material changes to the Condominium without a duly filed amendment to the Offering Plan.

Compliance with By-Laws and Rules and Regulations

Rules and regulations concerning the use of the Property and Units may be promulgated and amended from time to time by the Board of Managers, provided that copies of such Rules and Regulations are furnished to each Unit Owner prior to the time that they become effective. The initial Rules and Regulations of the Condominium are contained in Part II of the Offering Plan.

Each Unit Owner must comply strictly with the By-Laws and the rules, regulations, resolutions and decisions adopted pursuant thereto. Failure to comply with any of the same shall be grounds for an action to recover sums due, for damages or injunctive relief, or both, by the Board of Managers or in a proper case, an aggrieved Unit Owner. In the case of flagrant or repeated violation the Board of Managers may ask the offending Unit Owner for sufficient surety for future compliance.

A Manager may be removed for cause by a majority vote of the Unit Owners.

The powers of the Board of Managers are set forth in Article II of the By-Laws. Among those powers and duties necessary for administration of the affairs, which generally include all powers and duties relating to the Property and business affairs of the Condominium other than that specifically directed or required to be done by the Unit Owners personally, including, without limitation, the following:

(i) To determine the amount of, collect and disburse the Common Charges, including the right to accumulate a reserve for capital replacements.

(ii) To make reasonable Rules and Regulations in addition to those set forth in the By-Laws and to enforce them.

(iii) To employ others, including a management agent, and to delegate powers.

(iv) To maintain, make repairs to and replacements of the Common Elements and Limited Common Elements including exterior walls, roofs, pipes, wire conduit and public utility lines, any of which is located in one Unit and services another Unit, and painting of exterior surfaces of doors and windows which open from a Unit. However, a Unit Owner shall be responsible for the maintenance of their Unit including electric repairs, plumbing stoppage, window cleaning, painting and decorating in the Unit, all glass breakage, pipes, wires and conduits in and servicing the same Unit and repairs and replacements to the Unit.

(v) To choose officers of the Condominium which officers shall include a President who shall be the chief executive officer of the Condominium, shall preside at all meetings of the Unit Owners and Board of Managers and be an ex-officio member of all committees; a Secretary who shall record all votes and take and keep minutes of all meetings of the Unit Owner and Board of Managers; and a Treasurer who shall be responsible for overseeing the finances of the Condominium funds and for keeping the financial budget and record of the Condominium or overseeing them if kept by the Managing Agent.

(vi) To maintain Condominium bank accounts.

(vii) To bring and defend actions on behalf of the Condominium including foreclosure of liens for unpaid Common Charges.

(viii) To acquire title to any abandoned Unit or Units under foreclosure.

(ix) To make repairs, restore or alter any Unit or the Common Elements after damage by fire or other casualty or condemnation.

(x) To enter a Unit when necessary for the maintenance, care and preservation of the Property.

(xi) To furnish annually, at the end of each fiscal year, copies of an annual report of the Condominium including a balance sheet and profit and loss statement certified by an independent public accountant, a statement regarding any taxable income attributable to the Unit Owners and a notice of the holding of the annual Unit Owners meeting. A Unit Owners, their representatives and mortgagee may examine the Condominium books and records upon reasonable notice and during normal business hours.

(xii) To act as an agent of those Unit Owners, if any, who give their written authorization to apply to the New York City real estate tax assessment agency by filing a single protest or complaint on behalf of all such Unit Owners pursuant to the applicable sections of the Real Property Tax Law. The Board of Managers may retain legal counsel on behalf of all Unit Owners for whom it is acting as agent and charge those Unit Owners a pro-rata share of expenses, disbursements and legal fees.

Right of Action

The Board of Managers and any aggrieved Unit Owner shall have the right of action against Unit Owners or the Board of Managers for failure to comply with the Declaration, By-Laws, or decisions of the Board of Managers.

Any matter required or permitted to be determined by arbitration pursuant to the terms of the Declaration or By-Laws shall be submitted for resolution by a single arbitrator in a proceeding held in the City of New York in accordance with the rules of the then existing rules of the American Arbitration Association or any successor organization thereto. In the event that the American Arbitration Association shall not be in existence and has no successor organization, any such arbitration shall be held before an arbitrator appointed by a court of competent jurisdiction. The parties to any matter required or permitted to be determined by arbitration pursuant to the terms of the Declaration or By-Laws may, by written agreement, vary any terms of Article XVI of the By-Laws, and may agree to resolve the matter in any manner, including, without limitation, the manner set forth in §3031 of the New York Civil Practice Law & Rules and known as the Simplified Procedure for Court Determination of Disputes. The decision in any arbitration conducted pursuant to the terms of Article XVI shall be binding upon all of the parties thereto and may be entered in any court of competent jurisdiction.

Enforcement of Sponsor's Obligations

Nothing herein shall prevent an individual Unit Owner from bringing an action in the nature of a derivative action against the Board of Managers. Sponsor agrees that during the Sponsor Control Period it will in its capacity as the Board of Managers enforce such obligation when required to do so by a resolution duly passed by a majority of the Unit Owners, excluding Sponsor, at a special meeting of the Unit Owners called for such purpose. The Board of Managers has a fiduciary duty to act in the best interest of the Condominium, even during the Sponsor Control Period.

Voting

Each Unit Owner, or some person designated by such Unit Owner to act as proxy on such Unit Owner's behalf and who need not be a Unit Owner, shall be entitled to cast the votes appurtenant to the Unit Owner's Unit at all meetings of Unit Owners. The total number of votes of all Unit Owners shall be 1,000,000 and each Unit Owner shall be entitled to cast one vote at all meetings of the Units Owners for each .0001% of Common Interest attributable to their Unit(s).

Notices to Registered Mortgagees and Registered Guarantors

The Registered Mortgagee and Registered Guarantors will be notified within ten (10) days by certified or registered mail, with a "return receipt" requested in the event of the following:

(i) Any condemnation or casualty loss that affects either a material portion of the project or the unit securing its mortgage;

(ii) Any 60-day delinquency in the payment of assessments or charges owed by the owner of any Unit on which it holds the mortgage;

(iii) A lapse, cancellation, or material modification of any insurance policy maintained by the Condominium Association; and

(iv) Any proposed action that requires the consent of fifty-one percent (51%) of the Registered Mortgagees and Registered Guarantors.

THE FOREGOING SUMMARY IS NOT INTENDED TO BE A COMPLETE DISCUSSION OF THE BY-LAWS OR DECLARATION. PROSPECTIVE PURCHASERS OR THEIR ATTORNEYS OR ADVISORS SHOULD REVIEW THE BY-LAWS, DECLARATION AND OTHER IMPORTANT DOCUMENTS SET FORTH IN PART II OF THE OFFERING PLAN.

REAL ESTATE TAXES

Real estate taxes are assessed and collected by the City of New York. The Property is currently classified as a Tax Class 4 property (commercial).

Once Units are separately assessed for real estate taxes, each Unit Owner will be responsible only for payment of the tax bill attributable to Unit Owner's Unit, and will not be responsible for paying the tax bill attributable any other Unit. Likewise, with separate assessments, one Unit cannot be subject to a tax lien arising out of another Unit Owner's failure to pay the taxes due on that other Unit Owner's Unit.

Certain Purchasers of Residential Units, including senior citizens and veterans, may be exempt, in whole or in part, from real estate taxes. Each potential Purchaser should consult their own tax advisor as to the availability of such exemptions.

Submission of the Declaration and Tax Lot Drawings to the New York City Real Property Assessment Bureau for review is one of the first steps in the process by which the Units will become separate tax lots. The timing of this submission generally depends upon the date the Offering Plan is declared effective, as typically the submission is not made until that time. As of the date of this Offering Plan, Sponsor has no reason to anticipate any delay other than normal governmental processing time in effectuating creation of separate tax lots and individual Unit assessments.

Purchasers are advised, however, that due to the City's schedule in assessing real property generally, it is possible that separate assessments of Units may not be made for six to twelve months after separate tax lots legally are established. That is, separate tax lots may be established (thereby enabling Sponsor to convey Units to Purchasers), but separate assessments may follow some months later. Thus, for a period of time following establishment of separate tax lots, one tax bill may still be rendered for the entire Property. Details of how the tax bill will be paid under these circumstances and Purchasers' responsibilities for contributing their proportionate share of same, are included in Part I of this Offering Plan, "Unit Closing Costs and Adjustments."

Assessment and Tax Certiorari Proceedings

The Board of Managers shall have the right accorded board of managers in §339-y of the Condominium Act, on behalf of and as agent for any Unit Owner who has given written authorization to the Board of Managers, to commence, pursue and settle certiorari proceedings to obtain reduced real estate tax assessments with respect to the Unit, as set forth in the By-Laws. All Unit Owners will share the costs in connection therewith and the benefits derived therefrom. The Board of Managers may retain legal counsel on behalf of Unit Owners for which it is acting as agent and charge all such Unit Owners a pro-rata share of expenses, disbursements, and legal fees, for which charges the Board of Managers shall have a lien as if for Common Charges, pursuant to §339-z of the Condominium Act. If any Unit Owner seeks individually, to have the assessed value of said Owner's Unit reduced, by bringing a separate tax certiorari proceeding, the Board of Managers, if necessary for such proceeding, will execute any documents or other papers required for, and otherwise cooperate with such Unit Owner in pursuing such reduction, provided such Unit Owner indemnifies the Board of Managers and all other Unit Owners from all costs, claims and

expenses (including, without limitation, reasonable attorney's fees and expenses), resulting from such proceedings.

There are no tax certiorari proceedings currently pending for the Property.

Real Estate Tax Projection

The New York City Department of Finance assesses the values on all New York City residential and commercial properties annually. The Department of Finance releases tentative assessments of the property value of every property in January of every year and final assessments every May, prior to the beginning of each tax year, which begins July 1. Real Property tax rates, set each year by the City Council are applied to these property values to determine each homeowner's annual tax liability.

The property tax assessment process commences when the city's assessors determine the *market value* of the property. Despite the given name "*market value,"* this value has little to do with the actual value of the property (what someone would actually pay for acquisition of the property). In some neighborhoods the *market values* are close to actual property values. In others they can be as little as 5% of true values. Even within neighborhoods there can be wide variations. Property tax is only levied on a portion of the *market value*. This portion is called the *assessed value*. In regard to Condominiums with more than three (3) dwelling units, taxes are levied on 45% of the *market value*.

Any statements regarding property taxes as it relates to this Building has been ascertained from the Property Tax Projection Letter set forth subsequently in Part I of this Offering Plan supplied by Metropolitan Realty Exemptions, Inc., 381 South 5th Street, Brooklyn, NY 11211 ("Property Tax Professional"). Post-construction real estate tax estimates were made by Property Tax Professional. Sponsor and Sponsor's counsel have relied wholly on the Property Tax Projection Letter by Property Tax Professional to provide prospective purchasers the information related to the property taxes for the Building set forth herein; Sponsor and Sponsor's counsel are not property tax experts, have not independently verified the Property Tax Projection Letter, and make no judgment as to its accuracy. Therefore, Purchasers are strongly urged to review the Property Tax Projection Letter provided by Property Tax Professional thoroughly and to consult with their own tax counsel or expert regarding same. See the Property Tax Projection Letter dated August 27, 2019, set forth at the end of the section "Real Estate Taxes". The Property Tax Projection Letter provides, in part, that upon conversion to a condominium, the Residential Units will be designated Tax Class 2 and the Commercial Units will be designated Tax Class 4. The 2017/2018 tax rate is 12.719% for Tax Class 2 and 10.514% for Tax Class 4.

Estimated Residential Assessed Value without 421-a:	$8,372,685
Estimated Residential Tax Liability without 421-a:	$1,055,963
Estimated Residential Assessed Value with 421-a:	$1,662,383
Estimated Residential Tax Liability with 421-a:	$209,640
Estimated Commercial Assessed Value without ICAP:	$687,320
Estimated Commercial Tax Liability without ICAP:	$86,685

Estimated Commercial Assessed Value with ICAP:	$594,646
Estimated Commercial Tax Liability with ICAP:	$74,997

The Schedule A set forth in Part I of the Offering Plan allocates the estimated real estate taxes for the First Year of Operations to all Residential Units based on each Residential Unit's Common Interest. However, Sponsor makes no representation that the New York City Department of Finance will actually apportion the real estate taxes for each Unit based on Common Interest. Purchasers are urged to review the Property Tax Projection Letter with their own counsel to understand the tax implications on their Unit. After the Condominium is divided into individual tax lots by the Department of Finance, each Unit will be taxed as a separate tax lot for real estate tax purposes, and individual Unit Owners will not be responsible for, nor will the Unit be subject to, any lien arising from the nonpayment of taxes on other Units. Every January, the New York City Department of Finance mails property owners a Notice of Property Value. Every May, the New York City Department of Finance issues a final assessment. After the Declaration and Tax Maps are filed, until the New York City Department of Finance issues the next Notice of Property Value or final assessment, an assessment of each Unit may not be shown on the New York City Department of Finance website even if the New York City Department of Finance has apportioned the real estate taxes for each Unit.

421-a

Sponsor has submitted an application to the New York City Department of Housing Preservation and Development ("HPD") and obtained a 421-a Preliminary Certificate of Eligibility for the Property on April 28, 2016, which will entitle Sponsor to 421-a benefits for a period of three (3) years after commencement of construction. Upon the issuance of a TCO or a final CO for the building, Sponsor shall submit an application to HPD for a Final Certificate of Eligibility. Some requirements to obtain a 421-a tax exemption include: the use of Energy Star appliances, water heaters, and boilers, Units cannot be used as a hotel or for Single Room Occupancy purposes, no other exemption benefits are claimed, buildings with more than 50 Units must pay prevailing wages, an application for a Final Certificate of Eligibility must be submitted within 180 days of completion, a statement from an architect regarding the date construction was completed, a statement from a CPA as to the development cost, a copy of the Plan, proof of registration with HPD, and HPD fees. Sponsor represents that it will use reasonable efforts to obtain 421-a benefits following completion of construction. Sponsor will keep all records required by HPD to obtain a Final Certificate of Eligibility for post-construction 421-a benefits, and will make said records available to HPD whenever reasonably requested to do so. Sponsor will make all documents related to 421-a benefits available to the Condominium upon request, for inspection and copying for the duration of the 421-a benefits.

After completion of construction and pending issuance of a 421-a Final Certificate of Eligibility, any increase in assessment of the Property over the "prior assessed valuation" (the assessed valuation in effect during the tax year preceding the commencement of construction), shall remain exempt for fifteen (15) years, other than assessments for local improvements. The schedule for fifteen (15) year post-construction partial 421-a real estate tax exemption is as follows: one hundred percent (100%) exemption on any increase in the assessed value of the Property over the "prior assessed value" for years one (1) through eleven (11); eighty percent (80%) exemption in year twelve (12); sixty percent (60%) exemption in year thirteen (13); forty

percent (40%) exemption in year fourteen (14); and twenty percent (20%) exemption in year fifteen (15), with full real estate taxes due and payable commencing with the sixteenth (16th) year. The exemption on increases to assessed value is subject to a limit ("AV Cap"). For the 2020/2021 tax year, the AV Cap is $92,675, and will increase 3%, compounded annually.

Notwithstanding the disclosures set forth in the Plan pertaining to Sponsor's application for 421-a Benefits for the Building, Sponsor makes no representation or warranty that the Building will receive 421-a benefits after completion of construction, and no representation or warranty as to the date such 421-a Benefits will take effect. Section 421-a partial real estate tax benefits once granted may be revoked or reduced for non-payment or underpayment of taxes and for certain other reasons. In the event that 421-a benefits are not granted for any reason, then the real estate tax obligation for the Units will be based on the Units' assessed valuation, as determined by the New York City Department of Finance, multiplied by the then applicable tax rate and, as a result, real estate taxes would be significantly higher than if the Section 421-a Benefits had been granted. In such event, Purchasers shall not be entitled to a right of rescission.

PURCHASERS SHOULD NOT RELY UPON THE ISSUANCE OF 421-A TAX BENEFITS IN THEIR DECISIONS TO PURCHASE A UNIT, AS THE TAX BENEFITS MAY BE VERY DIFFICULT TO OBTAIN.

The Property Tax Professional has estimated 421-a benefits for the Building. This projection does not take into consideration that the exemption on increases to assessed value is subject to a limit ("AV Cap"). For the 2020/2021 tax year, the AV Cap is $92,675, and will increase 3%, compounded annually. The AV Cap applies on a per Unit basis, therefore, it is not permissible to assume the 421-a exemption benefits are distributed in exact proportion to Common Interest. The AV Cap is likely to affect larger Units in the Building so that 421-a tax savings for larger Units may be disproportionately less than the smaller Units and the total real estate taxes for all Units will be higher than the number set forth above. As Units are assessed every year, even if a Unit's assessed value is below the AV Cap in some years, the assessed value may exceed the AV Cap in subsequent years.

Sponsor also intends that the Condominium shall be exempted from the statutory obligation to register the Units as rent-stabilized by reason of its condominium status. Sponsor shall have fifteen (15) months from the date of issuance of a Final Certificate of Eligibility from the New York City Department of Housing Preservation and Development to declare the Plan effective. If the Plan is not declared effective within this period, Sponsor shall be obligated to register the Units as rent-stabilized as they become occupied.

Purchasers may obtain more information about the Section 421-a application process, tax benefits, and requirements associated therewith at:

http://www.nyc.gov/html/hpd/html/developers/421a.shtml

ICAP

The Industrial Commercial Abatement Program ("ICAP") is a tax abatement program covering nonresidential construction projects located in the City of New York. It is designed as a

tax incentive to encourage construction or rehabilitation of commercial properties. Buildings (and nonresidential condominium units) such as parking garages, retail buildings, community facility, shopping centers, office building, factories, hotels and warehouses are among the eligible type of properties, although they each receive different benefit amounts depending upon the location and use. The ICAP program has replaced the previous nonresidential tax incentive program known as the Industrial and Commercial Incentive Program (ICIP). ICIP granted tax exemptions based on the increase in assessed value resulting from new construction or renovation, the ICAP program grants tax abatements based on the increase in real estate taxes resulting from new construction or renovation.

Provided the technical requirements of the ICAP law are satisfied as implemented and interpreted by the New York City Department of Finance, the property is entitled to the tax abatement as-of-right and the New York City Department of Finance does not have discretion with which to deny the tax abatement. In order to be eligible for the Industrial Commercial Abatement Program, a preliminary application for such tax benefits must be filed prior to commencement of construction. A preliminary ICAP application and building permits must be filed timely. The current ICAP law covers eligible work commenced prior to March l, 2022. In addition to filing the preliminary ICAP application prior to the issuance of the building permit and commencement of construction, a final application for ICAP tax benefits must be submitted to the Department of Finance within one year after the initial permit is issued by the Department of Buildings. Applicants for the ICAP program must make a minimum required expenditure equal to at least 30% of the taxable assessed value of the property no later than four years from the date the building permit was first issued or from the start of construction if no permit is required. In addition to timely filing a preliminary application and meeting the minimum required expenditure, the law also requires that the annual real property income and expense statement be filed with the New York Department of Finance, a report of all current construction be filed with the Department of Finance on a semiannual basis and a final application for ICAP benefits be filed within one year after the date the first building permit was issued for construction work. Once the ICAP application has been approved, there is a requirement to file a bi-annual Certificate of Continuing Use with the Department of Finance certifying as to the current use of the property and other miscellaneous information. In addition to the filings with the Department of Finance, there are also additional filing requirements with the New York City Department of Small Business Services. The filing with the Department of Small Business Services is predominately a paperwork requirement but also requires an outreach to minority and women contractors.

The ICAP tax benefit is an abatement of real estate taxes by the amount by which the post completion real estate tax on a building exceeds 115% of the preconstruction tax. Therefore, the ICAP tax benefit does not eliminate real estate taxes, it only results in a partial, but nevertheless substantial, abatement of the real estate taxes. The ICAP law does not provide any benefits during the construction period. The preconstruction and post construction taxes are both calculated utilizing the tax rate from the preconstruction year. The ICAP benefit in this area is set for 15 years, with 100% of the increase in assessed value that exceeds 115% of the prior assessed value multiplied by the prior tax rate used to determine the extent of the ICAP benefit. This 100% amount last for eleven years and then phases out starting in the twelfth year of the ICAP benefit at a rate of 80%-60%-40%-20% of the original benefit in the final four years. The benefit is slightly different if the designated area contains retail footage. ICAP tax benefits commence in the first tax year that occurs after the tax status date that immediately follows completion of construction.

No warranty, guarantee or assurance is given that:

(i) any projected or estimated amount set forth above including, without limitation, the estimates of the Property's assessed valuation during the first year of Condominium operation; the estimates of the portions of such assessed valuations that will be allocable to the Units; the tax rate that will be in effect during the first year; will approximate the actual amount; or

(ii) the New York City Department of Finance will allocate the Property's aggregate assessed valuation between the Units in accordance with the appraised values used by Property Tax Professional for such purpose, or that the New York City Department of Finance will allocate the aggregate assessed valuation attributable to the Units among the different Units as described above.

The policy of the New York City Department of Finance is to apportion each Unit's real estate taxes based on its Common Interest. However, the City of New York is not bound by the allocation of Common Interests and may allocate on a different basis. SPONSOR MAKES NO REPRESENTATION THAT THE ASSESSED VALUE OF THE PROPERTY, THE ESTIMATED ALLOCATIONS, OR THE TAX RATE WILL NOT BE CHANGED.

There is no assurance the taxing authority will allocate taxes based on relative apartment size, apartment height, and unit-specific features, as provided in the analysis by Property Tax Professional. It is therefore possible that owners of Units having the same percentage of Common Interest will pay different amounts of real estate taxes.

No representation or warranty can be made as to (a) whether there will be (i) a further increase in the actual valuation of the Property during the projected budget year or (ii) an increase in the assessed valuation of the Property by reason of the condominium conversion or otherwise, or (b) the method of determining the assessed valuation (whether on a rent roll, market or other basis) or (c) the amount of any increase in the assessed valuation of the Property.

If separate tax assessments have not been made for individual Units prior to the closing of title to a Unit, Sponsor will collect from each Purchaser at closing, and will place in escrow in a separate account established by the Sponsor for that purpose, an amount equal to the Unit's estimated proportionate share of the real estate taxes projected to be due for the entire Property for the half of the tax year next commencing after the closing of said Unit (i.e., for either the first half or second half, depending on when the Unit closes). If the tax assessor indicates that more than one half of a tax year may elapse before the Units are individually assessed, Sponsor shall collect at closing Purchaser's proportionate share of taxes for the upcoming half and shall deposit the same in the account described above. Until separate tax assessments have been made for individual Units, a Purchaser that obtained financing may have to maintain a second tax escrow account with their lender. With respect to the balance of the estimated taxes due for the next applicable tax period, the Board of Managers is authorized by the By-Laws, and shall be obligated to collect monthly escrows from Unit Owners with their Common Charges based upon the estimated tax bill for the entire Property and the then current tax rate deposit the same in the tax escrow account. At the time taxes are due and payable, Sponsor shall pay out of Sponsor's own funds, Sponsor's

proportionate share of the Property tax bill allocable to the Unit(s) Sponsor then owns, based on the allocation method described above, and the Board of Managers shall be obligated to cause the release to Sponsor of the appropriate amount of escrowed tax funds in the tax escrow account for Sponsor's use in paying the share of taxes attributable to Units that have been sold and closed to other Unit Owners.

If the actual taxes due for any period for which Sponsor collected escrows are higher than the amount collected and held in escrow, the Board of Managers shall pay the difference and shall bill Unit Owners for their proportionate share of any necessary reimbursement, as a Special Assessment. Sponsor will remain liable for all real estate taxes attributable to Sponsor's Units until Sponsor sells and conveys those Units. If any Unit Owner fails to pay a Unit's pro rata share of real estate taxes when due, by Common Charge billing, special assessment billing, or both, the Board of Managers will have a lien on such Unit for non-payment thereof, as if such charges were Common Charges.

If the actual taxes due for any period for which Sponsor collected escrows are lower than the amount collected and held in escrow, the Board of Managers shall pay the Unit Owners their proportionate share of any excess. If the Sponsor collected then Sponsor has to pay or if the Board of Managers collected then the Board of Managers has to pay.

Prospective Purchasers are advised to read the full text of the Property Tax Projection Letter on the following page for details about the projected real estate tax assessments.

METROPOLITAN
Realty Exemptions

Office: 381 South 5th Street, Brooklyn, NY 11211
Mailing: 118 Middleton Street, Brooklyn, NY 11206
Phone: (718) 387-3004 | **Fax:** (718) 228-3503
Email: martin@mretax.com |**Web:** www.mretax.com

August 27, 2019

REAL ESTATE TAX OPINION OF ELIGIBILITY

3714 LIC Development LLC
C/O SPG Capital Partners
38 East 29th Street
New York, NY 10016
Attn: Martin Nussbaum

RE: 3714 LIC Development LLC
37-14 34 Street
Long Island City, Queens, NY
Block & Lot: 375 - 24

Opinion Letter Regarding 421a Partial Real Estate Tax Abatement Benefits and Tax Liabilities

Project Details: 77 Condo Apartments, 43 Parking Spaces, 1 Commercial Unit, 42 Storage Spaces and 6 Roof Cabanas

Dear Sir,

by the Department of Finance.

The following estimates are provided in response to your request for an opinion and projection of the real estate assessments and taxes.

I. Project Details

1. You have informed us that you intend to build two mixed use residential buildings on the above tax lot ("property"), and that this building will be constructed pursuant to Department of Buildings job type "NB – New Building".

2. You have requested an opinion concerning the real property assessment to be levied upon the above property for the first full tax year after completion of construction, which corresponds to the tax year 2020/2021.

3. You have informed us that the development project will have a gross floor area of approximately **106,590** square feet, to be divided as follows: the commercial unit will consist of approximately 12,606 square feet, the residential portion will consist of

approximately 84,084 square feet and the parking area will consist of approximately 9,900 square feet.

4. You have informed us that there will be two towers with one (1) commercial unit and a total of seventy-seven (77) residential dwelling units located on floors two (2) through seven (7), including forty-three (43) parking spaces in the cellar level, forty-two (42) storage units and six (6) cabana units.

5. There will be separate condominium tax lots filed with the DOF for each unit individually.

6. Based on assessment guidelines, the DOF Surveyor's Office shall class the condominium units as a tax class two (2) and thus levy the assessed value on a 45% rate of the market value.

II. Estimated Assessed Value

We have taken the following factors in account when formulating our opinion: (a) the recent tax assessment history on the property; (b) the potential income for the new structure (if operated as a rental); (c) comparable condominium projects in Queens (specifically, in the Long Island City neighborhood) which have been recently constructed; (d) market conditions in the general area; (e) proposed estimate of the cost of construction; and (f) calculation of the gross floor area mentioned above.

Assessments in New York City are made on a fiscal year basis, beginning on July 1st of each year and ending on June 30th the following year. The status of the building on January 5th of each year is the basis of the assessment for the fiscal year beginning that July 1st.

Real Property Tax Law Section 1805 provides for the creation of a transition assessment system within the City of New York. Under the transition assessment system, the usual increase in the actual assessed value of a property between one year and the next is phased in over a five-year period in equal installments. The five-year phase-in does not apply to new construction or other increases due to physical improvements to the property. Increases due to such physical improvements or new construction are added in full to the next year's assessment. Pursuant to Real Property Tax Law Section 1805, the taxable assessment is determined to be the lesser of the actual assessed valuation or the transition assessed valuation.

We believe there will be a substantial increase in value for 2020/21 as a result of the new construction, and that such an increase will be placed on the assessment roll immediately. However, in future years increases in assessed value will likely result in the taxable assessment being based on a phased-in transition assessment.

III. 2020/21 Projected Assessed Value and Tax Liability

Considering the aforementioned factors, we are estimating that the DOF will set the assessed value of at approximately **$85** per square foot.

Accordingly, the total assessed value of the property (i.e., the aggregate assessment of the entire building) is estimated to be **$9,060,005**, following completion of construction.

Assuming the 2018/2019 tax rates of 12.612% for tax class 2 (i.e., $12.612 per $100 of AV), the projected tax liability will be **$1,142,648** annually.

IV. 421a Eligibility and Effect on Taxes

The real estate tax benefits available to eligible properties under Section 421-a are as follows:

- During the period of construction, which will not exceed three years, multiple dwellings, which have met all requirements of Section 421-a and the regulations and have received a Preliminary Certificate of Eligibility, shall be abated from real property taxes, other than assessments for local improvements, upon any increase in assessed valuation attributable to construction over the prior assessed valuation (the assessed valuation in effect during the tax year preceding the commencement of construction), provided that taxes shall be paid in each tax year in which full or partial abatement is in effect.

- Pursuant to Section 421-a and the regulations, in the event the multiple dwelling contains Floor Area of Commercial, Community Facility and/or Accessory Use Space which exceeds twelve percent (12%) of the Aggregate Floor Area, there shall be a diminution of the partial tax abatement in an amount equal to the ratio of Floor Area of Commercial, Community Facility and/or Accessory Use Space in excess of twelve (12%) of the Aggregate Floor Area to the Aggregate Area.

- After the first taxable status date immediately following the completion of construction, any increase in assessed valuation over the prior assessed valuation of eligible multiple dwellings which have received a Final Certificate of Eligibility shall be exempt from real property taxes, other than assessments for local improvements, for either ten, fifteen, twenty or twenty-five consecutive tax years. In addition, full taxes must be paid on the prior assessed valuation.

Please be advised that the City Agencies have amended the 421a Rules & Regulations to expand the 421-a geographic exclusion area (GEA). Developments in the GEA are required to provide 20% onsite affordable housing or Negotiable Certificates in exchange for receiving 421-a tax benefits. According to the amended Rules & Regulations, the subject premise is **not** located within the Geographic Exclusion Area (GEA).

V. Exempt Assessed Value Cap

Additionally, as per the amended Rules & Regulations, only a portion of an apartment's billable exempt Assessed Value is now eligible for the 421-a tax abatement. The value of a unit above this threshold ("AV cap") is ineligible to receive benefits. For units with an exempt Assessed Value above this Assessed Value cap, owners will pay taxes on the portion of Assessed Value above the cap, but still, receive tax benefits on the portion of Assessed Value below the cap. The Assessed Value cap was originally set at $65,000 per unit, however, the amount has been increased by 3%, compounded annually, on each taxable status date following August 17, 2008, the first anniversary of the effective date of the State Law. As of tax year 2020/2021 the Assessed Value cap rate is $92,674.

For example: in the event of a unit with an Assessed Value of $98,000, the 421a benefits will exempt the initial $92,674 in Assessed Value and the remaining will $5,326 will be billed as regular non-exempt tax liabilities.

Based on our projection of the assessed value (as detailed below), the cap in Assessed Value will affect the subject premise since units in such may encompass an Assessed Value greater than the aforementioned cap.

In this instance, after the completion of construction as described above, any increase in the properties assessed valuation, resulting from the construction of the building will be exempt from taxation for a period of fifteen years, with 100% abatement for eleven years followed by a 20% phase-out in each of the succeeding four years. The current assessed value is not to be exempt from real estate taxes.

Furthermore, please be advised that the assessed valuation of the various units are determined by the Real Property Assessment Department of the New York City Department of Finance. The tax rate is determined by the New York City Council who publishes the rate annually, usually in June.

VI. 421-a Filing Compliance

1. The building will be constructed substantially in accordance with the plans and specifications approved by the New York City Department of Buildings, and comply with the requirements of section 421-a, the Regulations, and HPD is notified of any modifications to plans;

2. The Preliminary Certificate of Eligibility wase filed with the appropriate New York City agencies during the appropriate time periods;

3. An application for Preliminary Certificate of Eligibility for 421-a benefits was filed after the commencement of construction but prior to the issuance of either a Temporary Certificate of Occupancy for all residential areas or a Permanent Certificate of Occupancy upon prescribed forms and applications prepared by the New York City Department of Housing Preservation and Development;

4. HPD has issued a Preliminary Certificate of Eligibility on April 28, 2016 (copy attached hereto as Exhibit A).

5. An application for Final Certification of Eligibility for 421-a benefits will be filed prior to the occupancy of the building, but no earlier than the date of the application for a Preliminary Certificate of Eligibility. Additionally, the application must be completed within ninety (90) days following the issuance of the Permanent Certificate of Occupancy or the Temporary Certificate of Occupancy covering all residential space;

6. The premises, or any portion thereof, was "underutilized" (pursuant to the provisions of Section 421-a) 36 months prior commencement of construction;

7. Neither the Building nor any part thereof shall be used as a hotel or for single room occupancy as defined in the Rules Section 6-01(c);

8. The building will be substantially used for dwelling purposes for a period of at least fifteen years following its completion;

9. There will be no real estate taxes, water or sewer charges or payments in lieu of taxes due and owing as of the last day of the tax quarter preceding the submission date of the application to the Department of Finance, or at any time during the application process or the benefit period;

10. All records requested by the New York City Department of Housing Preservation and Development, pursuant to the regulations, will be provided.

Based upon the foregoing information furnished to us by you and your architect, and subject to your timely completion of work and filing of all documentation pursuant to Section 421-a of the Real Property Tax Law and applicable rules and regulations as is required to obtain the benefits thereof, and assuming presently applicable Section 421-a provisions apply, it is our opinion that:

- The premise will be eligible for partial real estate tax abatement under Section 421-a, during the period of construction and after completion of construction, as outlined above.

- The commercial unit will be applying under the 421a tax exemption, for the portion not to exceed 12% of the total building square footage.

- All Section 421-a partial real estate tax benefits may be revoked or reduced if the application misstates or omits to state a material fact and/or for non-payment or underpayment of taxes and for certain other reasons.

VII. 421-a Real Estate Tax Liabilities

As stated above, we are estimating that the DOF will set the assessed value at approximately **$9,060,005**, following completion of construction.

The residential units will be categorized as a tax class 2. Based on the latest 2018/2019 tax rate of 12.612% (i.e., $12.612 per $100 of Assessed Value), the projected tax liabilities will be approximately as follows:

% of Interest	Unit	Assessed Value	Annual Tax	421a AV with Cap	421a Annual Tax
0.70%	N2A	$63,575	$8,018	$4,903	$618
0.70%	N2B	$63,575	$8,018	$4,903	$618
0.92%	N2C	$83,054	$10,475	$6,406	$808
1.50%	N2D	$135,748	$17,121	$43,074	$5,432
0.95%	N3A	$85,917	$10,836	$6,626	$836
0.71%	N3B	$64,726	$8,163	$4,992	$630
0.71%	N3C	$64,726	$8,163	$4,992	$630
0.92%	N3D	$83,625	$10,547	$6,450	$813
0.92%	N3E	$83,625	$10,547	$6,450	$813

0.92%	N3F	$83,625	$10,547	$6,450	$813
0.95%	N3G	$85,917	$10,836	$6,626	$836
0.72%	N3H	$65,296	$8,235	$5,036	$635
0.98%	N3I	$88,780	$11,197	$6,847	$864
0.97%	N4A	$87,630	$11,052	$6,758	$852
0.73%	N4B	$66,438	$8,379	$5,124	$646
0.73%	N4C	$66,438	$8,379	$5,124	$646
0.94%	N4D	$85,346	$10,764	$6,582	$830
0.94%	N4E	$85,346	$10,764	$6,582	$830
0.94%	N4F	$85,346	$10,764	$6,582	$830
0.97%	N4G	$87,630	$11,052	$6,758	$852
0.75%	N4H	$67,589	$8,524	$5,213	$657
1.00%	N4I	$90,493	$11,413	$6,979	$880
0.99%	N5A	$89,351	$11,269	$6,891	$869
1.49%	N5B	$134,597	$16,975	$41,923	$5,287
0.95%	N5C	$85,917	$10,836	$6,626	$836
0.95%	N5D	$85,917	$10,836	$6,626	$836
0.95%	N5E	$85,917	$10,836	$6,626	$836
1.36%	N5F	$123,145	$15,531	$30,471	$3,843
1.52%	N5G	$137,460	$17,336	$44,786	$5,648
1.71%	N6A	$154,647	$19,504	$61,973	$7,816
1.30%	N6B	$117,419	$14,809	$24,745	$3,121
0.98%	N6C	$88,780	$11,197	$6,847	$864
0.98%	N6D	$88,780	$11,197	$6,847	$864
1.39%	N6E	$126,008	$15,892	$33,334	$4,204
1.58%	N6F	$143,195	$18,060	$50,521	$6,372
1.71%	N7A	$154,647	$19,504	$61,973	$7,816
2.53%	N7B	$229,104	$28,895	$136,430	$17,206
1.42%	N7C	$128,871	$16,253	$36,197	$4,565
1.61%	N7D	$146,058	$18,421	$53,384	$6,733
0.70%	S2A	$63,575	$8,018	$4,903	$618
0.70%	S2B	$63,575	$8,018	$4,903	$618
0.92%	S2C	$83,054	$10,475	$6,406	$808
1.58%	S2D	$143,195	$18,060	$50,521	$6,372
0.95%	S3A	$85,917	$10,836	$6,626	$836
0.71%	S3B	$64,726	$8,163	$4,992	$630
0.71%	S3C	$64,726	$8,163	$4,992	$630
0.92%	S3D	$83,625	$10,547	$6,450	$813
0.92%	S3E	$83,625	$10,547	$6,450	$813
0.92%	S3F	$83,625	$10,547	$6,450	$813
1.30%	S3G	$117,419	$14,809	$24,745	$3,121
1.49%	S3H	$134,597	$16,975	$41,923	$5,287
0.97%	S4A	$87,630	$11,052	$6,758	$852
0.73%	S4B	$66,438	$8,379	$5,124	$646

0.73%	S4C	$66,438	$8,379	$5,124	$646
0.94%	S4D	$85,346	$10,764	$6,582	$830
0.94%	S4E	$85,346	$10,764	$6,582	$830
0.94%	S4F	$85,346	$10,764	$6,582	$830
1.33%	S4G	$120,282	$15,170	$27,608	$3,482
1.39%	S4H	$126,008	$15,892	$33,334	$4,204
0.99%	S5A	$89,351	$11,269	$6,891	$869
0.75%	S5B	$67,589	$8,524	$5,213	$657
0.75%	S5C	$67,589	$8,524	$5,213	$657
0.96%	S5D	$87,059	$10,980	$6,714	$847
0.96%	S5E	$87,059	$10,980	$6,714	$847
0.96%	S5F	$87,059	$10,980	$6,714	$847
1.36%	S5G	$123,145	$15,531	$30,471	$3,843
1.42%	S5H	$128,871	$16,253	$36,197	$4,565
1.64%	S6A	$148,921	$18,782	$56,247	$7,094
1.30%	S6B	$117,419	$14,809	$24,745	$3,121
0.99%	S6C	$89,922	$11,341	$6,935	$875
0.99%	S6D	$89,922	$11,341	$6,935	$875
1.39%	S6E	$126,008	$15,892	$33,334	$4,204
1.52%	S6F	$137,460	$17,336	$44,786	$5,648
1.71%	S7A	$154,647	$19,504	$61,973	$7,816
2.53%	S7B	$229,104	$28,895	$136,430	$17,206
1.42%	S7C	$128,871	$16,253	$36,197	$4,565
1.61%	S7D	$146,058	$18,421	$53,384	$6,733
0.10%	P1	$9,160	$1,155	$706	$89
0.10%	P2	$9,160	$1,155	$706	$89
0.10%	P3	$9,160	$1,155	$706	$89
0.10%	P4 (ADA)	$9,160	$1,155	$706	$89
0.10%	P5	$9,160	$1,155	$706	$89
0.10%	P6	$9,160	$1,155	$706	$89
0.10%	P7	$9,160	$1,155	$706	$89
0.10%	P8 (A)	$9,160	$1,155	$706	$89
0.10%	P9 (A)	$9,160	$1,155	$706	$89
0.10%	P10 (A)	$9,160	$1,155	$706	$89
0.10%	P11 (A)	$9,160	$1,155	$706	$89
0.10%	P12 (A)	$9,160	$1,155	$706	$89
0.10%	P13 (A)	$9,160	$1,155	$706	$89
0.10%	P14 (A)	$9,160	$1,155	$706	$89
0.10%	P15 (A)	$9,160	$1,155	$706	$89
0.10%	P16 (A)	$9,160	$1,155	$706	$89
0.10%	P17 (A)	$9,160	$1,155	$706	$89
0.10%	P18 (A)	$9,160	$1,155	$706	$89
0.10%	P19 (A)	$9,160	$1,155	$706	$89
0.10%	P20 (A)	$9,160	$1,155	$706	$89

0.10%	P21 (A)	$9,160	$1,155	$706	$89
0.10%	P22 (A)	$9,160	$1,155	$706	$89
0.10%	P23 (A)	$9,160	$1,155	$706	$89
0.10%	P24 (A)	$9,160	$1,155	$706	$89
0.10%	P25 (A)	$9,160	$1,155	$706	$89
0.10%	P26 (A)	$9,160	$1,155	$706	$89
0.10%	P27 (A)	$9,160	$1,155	$706	$89
0.10%	P28 (A)	$9,160	$1,155	$706	$89
0.10%	P29 (A)	$9,160	$1,155	$706	$89
0.10%	P30 (A)	$9,160	$1,155	$706	$89
0.10%	P31 (A)	$9,160	$1,155	$706	$89
0.10%	P32 (A)	$9,160	$1,155	$706	$89
0.10%	P33 (A)	$9,160	$1,155	$706	$89
0.10%	P34 (A)	$9,160	$1,155	$706	$89
0.10%	P35 (A)	$9,160	$1,155	$706	$89
0.10%	P36 (A)	$9,160	$1,155	$706	$89
0.10%	P37 (A)	$9,160	$1,155	$706	$89
0.10%	P38 (A)	$9,160	$1,155	$706	$89
0.10%	P39 (A)	$9,160	$1,155	$706	$89
0.10%	P40 (A)	$9,160	$1,155	$706	$89
0.10%	P41 (A)	$9,160	$1,155	$706	$89
0.10%	P42	$9,160	$1,155	$706	$89
0.10%	P43 (ADA)	$9,160	$1,155	$706	$89
0.15%	NC1	$13,744	$1,733	$1,060	$134
0.16%	NC2	$14,895	$1,879	$1,149	$145
0.15%	NC3	$13,744	$1,733	$1,060	$134
0.15%	SC1	$13,744	$1,733	$1,060	$134
0.16%	SC2	$14,895	$1,879	$1,149	$145
0.15%	SC3	$13,744	$1,733	$1,060	$134
0.03%	S1	$2,863	$361	$221	$28
0.03%	S2	$2,863	$361	$221	$28
0.03%	S3	$2,292	$289	$177	$22
0.03%	S4	$2,292	$289	$177	$22
0.03%	S5	$2,292	$289	$177	$22
0.03%	S6	$2,292	$289	$177	$22
0.03%	S7	$2,292	$289	$177	$22
0.03%	S8	$2,292	$289	$177	$22
0.03%	S9	$2,292	$289	$177	$22
0.03%	S10	$2,292	$289	$177	$22
0.03%	S11	$2,292	$289	$177	$22
0.03%	S12	$2,292	$289	$177	$22
0.03%	S13	$2,292	$289	$177	$22
0.03%	S14	$2,292	$289	$177	$22
0.03%	S15	$2,292	$289	$177	$22

0.03%	S16	$2,292	$289	$177	$22
0.03%	S17	$2,292	$289	$177	$22
0.03%	S18	$2,292	$289	$177	$22
0.03%	S19	$2,292	$289	$177	$22
0.03%	S20	$2,863	$361	$221	$28
0.03%	S21	$2,519	$318	$194	$24
0.03%	S22	$2,292	$289	$177	$22
0.03%	S23	$2,292	$289	$177	$22
0.03%	S24	$2,292	$289	$177	$22
0.03%	S25	$2,292	$289	$177	$22
0.03%	S26	$2,292	$289	$177	$22
0.03%	S27	$2,292	$289	$177	$22
0.03%	S28	$2,519	$318	$194	$24
0.03%	S29	$2,292	$289	$177	$22
0.03%	S30	$2,292	$289	$177	$22
0.03%	S31	$2,292	$289	$177	$22
0.03%	S32	$2,292	$289	$177	$22
0.03%	S33	$2,292	$289	$177	$22
0.03%	S34	$2,292	$289	$177	$22
0.03%	S35	$2,292	$289	$177	$22
0.03%	S36	$2,292	$289	$177	$22
0.03%	S37	$2,292	$289	$177	$22
0.03%	S38	$2,292	$289	$177	$22
0.03%	S39	$2,292	$289	$177	$22
0.03%	S40	$2,292	$289	$177	$22
0.03%	S41	$2,863	$361	$221	$28
0.03%	S42	$2,519	$318	$194	$24
7.5862%	Comm. Unit	$687,320	$86,685	$594,646	$74,997
100%		**$9,060,005**	**$1,142,648**	**$2,257,029**	**$284,657**

Disclaimer

Although the aforesaid estimate of the Actual Assessed Valuation is a good-faith estimate, it is not possible to estimate the same with any degree of certainty. Assessed valuations, when made, may be lesser or greater based on the interpretation of the administrative code and the applicable rules and regulations of the City of New York.

Though we believe our opinions are well-founded, they are not intended, and should not be construed as warranties or guarantees or representations as to future assessed valuations of the property under discussion and we accept no responsibility or liability in the event that the figures or projections set forth herein are incorrect or inaccurate. In no event will this firm, the Sponsor, the Sponsor's counsel or any other person be liable if the assessed valuation, when actually made, is lesser or greater than that estimated above, or if the administrative code and the

applicable rules and regulations of the City of New York are changed in the future, or if the facts as represented prove to be untrue.

Sincerely yours,

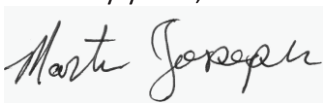

Martin Joseph
Metropolitan Realty Exemptions, Inc.

INCOME TAX DEDUCTIONS TO UNIT OWNERS AND TAX STATUS OF THE CONDOMINIUM

Deductibility of Mortgage Interest and Real Estate Taxes

A Unit Owner will own their Unit in fee simple and each Unit will be a separate tax lot for real estate tax purposes. Therefore, each Unit Owner may mortgage their Unit with an institutional lender and will be liable for payment of mortgage interest and principal and any real estate taxes assessed against the Unit.

A non-corporate Residential Unit Owner who itemizes their deductions will be entitled to a deduction in computing their taxable income for Federal income tax purposes for bona fide mortgage interest incurred with respect to their Unit in the year paid provided that (a) the indebtedness is incurred in acquiring, constructing or improving the Unit, (b) the indebtedness is secured by the Unit, (c) the indebtedness does not exceed $750,000.00, or $375,000 in the case of a married individual filing a separate return, and (d) the Unit is a "qualified residence." The Federal limitation on the deduction for real estate taxes applies in the aggregate to, and is inclusive of, state and local income taxes paid as well. Thus, the maximum amount a Residential Unit Owner may deduct for real estate taxes and state and local taxes combined is $10,000 ($5,000 in the case of a married individual filing a separate return). The amount of any available deductions may vary due to changes in the interest rate, the allocation of constant debt service payments to interest, and state and local taxes. For some taxpayers, the foregoing deductions may also be impacted by the alternative minimum tax. No opinion is expressed as to the taxation of Unit Owners who are not New York State residents or not individuals. Purchasers are strongly encouraged to consult with their own tax professionals to ascertain the tax costs and benefits, if any, of ownership of a Unit.

A Unit Owner who uses a Unit for professional or business use or for the production of income, should be entitled, under present law, to a deduction for Federal and New York State income tax purposes for the real estate taxes paid on the Unit and for the interest paid on any mortgage covering the Unit.

On January 1, 2018, the Tax Cuts and Jobs Act of 2017 went into effect. This federal law significantly changed the previously existing Internal Revenue Code, including the taxes and deductions related to homeownership. Purchasers are advised to consult with a tax expert regarding whether the new law will affect the purchaser's taxes.

Tax Status of Condominium

The Condominium will be managed by the Board of Managers, which shall collect the Common Charges on behalf of the Condominium. Although it is not clear whether the Condominium would be treated as an association taxable as a corporation for Federal tax purposes, there is substantial authority for such treatment. Assuming that it is a taxable entity, the Condominium will file tax returns and be subject to the regular corporate income tax on its taxable income, and its taxable income would be computed as the excess of its gross income over its deductible expenses. However, any portion of the Common Charges that is segregated and used to finance specified capital expenditures should not be included in gross income.

Notwithstanding the foregoing, the Condominium should qualify under Section 528 of the Internal Revenue Code to be exempt from tax on certain income. If the Condominium meets all

applicable requirements and properly makes the election, it may be exempt from tax on membership fees, dues and assessments from the Condominium Unit Owners.

No warranty is or can be made by Sponsor or any other person that the United States Treasury Department or the New York State Department of Taxation will allow the aforementioned deductions and no representation or warranty is or can be made that the tax law or the regulations or rulings issued thereunder, or any judicial interpretation thereof, may not change so as to disallow the deductions in whole or in part. Neither Sponsor nor its counsel shall be liable if it is held that the Unit Owners are not entitled to such income tax deductions or to special exemptions as aforesaid due to changes in applicable law, regulation or decisional law.

COUNSEL'S TAX OPINION

MARANS WEISZ & NEWMAN LLC
29 BROADWAY · SUITE 2400 · NEW YORK, NY 10006 · 212 968-0244

November 5, 2018

3714 LIC DEVELOPMENT LLC
4918 3rd Avenue
Brooklyn, NY 11220

Re: Offering Plan for: The 37-14 34th Street Condominium
Premises: 37-14 34th Street, Long Island City, NY 11101

To Whom It May Concern:

You have requested our opinion with regard to certain income tax matters relating to the Offering Plan (the "Offering Plan") for The 37-14 34th Street Condominium (the "Condominium") including specifically the availability of certain deductions for federal, New York State and New York City income tax purposes with respect to payments of mortgage interest and real estate taxes by individual Unit Owners and the tax treatment to be received by the Condominium.

All capitalized terms not otherwise defined herein shall have the meaning ascribed to them in the Offering Plan.

You have advised us that the Sponsor will apply to the Department of Law of the State of New York to convert the premises located at 37-14 34th Street, Long Island City, NY 11101 to condominium ownership pursuant to the provisions of Article 9-B of the Real Property Law of the State of New York. The Condominium shall consist of Seventy-Seven (77) Residential Units, One (1) Commercial Unit, Forty-Three (43) Parking Units, Forty-Two (42) Storage Units, and Six (6) Cabana Units. Each Unit Owner will hold title to their Unit in fee simple plus an undivided interest in the Common Elements. Each Unit and its interest in the Common Elements will be taxed as a separate parcel for real estate tax purposes. Each Unit Owner may place a separate mortgage in accordance with the By-laws and the Offering Plan, on their Unit and, by doing so incur direct liability for the interest payable on such mortgage. The Condominium will be operated by a Board of Managers which, pursuant to the By-Laws, will act as the agent of the Unit Owners. The primary function of the Board of Managers will be to collect the Common Charges and use such funds to supervise the maintenance and operation of the Common Elements.

In connection with this opinion, we have reviewed various documents included in the Offering Plan, or as exhibits to the Offering Plan, relating to the Condominium including the Declaration and By-Laws.

Each unit under this Offering Plan is consistent with Real Property Law§339-(i)(1)(iv).

The percentage of Common Interest allocated to each Unit is based upon floor space, subject to the location of such space and additional factors of relative value to other space in the Condominium, the uniqueness of the Unit, the availability of Common Elements for exclusive or shared use, and the overall dimensions of the particular Unit.

A non-corporate Residential Unit Owner who itemizes their deductions will be entitled to a deduction in computing their taxable income for Federal income tax purposes for bona fide mortgage interest incurred with respect to their Unit in the year paid provided that (a) the indebtedness is incurred in acquiring, constructing or improving the Unit, (b) the indebtedness is secured by the Unit, (c) the indebtedness does not exceed $750,000.00, or $375,000 in the case of a married individual filing a separate return, and (d) the Unit is a "qualified residence." The Federal limitation on the deduction for real estate taxes applies in the aggregate to, and is inclusive of, state and local income taxes paid as well. Thus, the maximum amount a Residential Unit Owner may deduct for real estate taxes and state and local taxes combined is $10,000 ($5,000 in the case of a married individual filing a separate return). The amount of any available deductions may vary due to changes in the interest rate, the allocation of constant debt service payments to interest, and state and local taxes. For some taxpayers, the foregoing deductions may also be impacted by the alternative minimum tax. No opinion is expressed as to the taxation of Unit Owners who are not New York State residents or not individuals. Purchasers are strongly encouraged to consult with their own tax professionals to ascertain the tax costs and benefits, if any, of ownership of a Unit.

A Condominium under New York State law is generally an unincorporated association ("Association"). Absent the application of Section 528, federal law is unclear as to the tax status of a condominium; there is no authority addressing the entity classification of an unincorporated association. If the Association does not elect to be treated as a corporation for the purposes of federal income tax, the Association would be treated as a partnership where income and expenses of the Association pass through to Unit Owners.

We have been requested to opine as to whether the Association will be eligible to qualify as a tax-exempt organization for federal income tax purposes. In order for the Association to qualify as an exempt organization for federal income tax purposes under Section 528 of the Internal Code, it must meet the following six (6) conditions:

(1) The Association must be organized and operated to provide for the acquisition, construction, management, maintenance and care of the Association's property.

(2) Sixty percent (60%) or more of the Association's gross income must be derived from the payment of dues or fees from the Unit Owners in their capacity as owner-members rather than in the capacity as customers for services.

(3) Ninety percent (90%) or more of the expenditures of the Association for the taxable

year must be used for the acquisition, construction, management, maintenance and care of the Association's property.

(4) No part of the net earnings of such organization inures (other than by acquiring, constructing, or providing management, maintenance, and care of association property, and other than by a rebate of excess membership dues, fees, or assessments) to the benefit of any private shareholder or individual.

(5) The Association must qualify as a "Condominium management association," which is an organization meeting the requirements of condition (1) above with respect to a Condominium substantially all of which units are used by individuals as residences.

(6) The Association must properly and timely elect to have Section 528 of the Internal Revenue Code apply for the taxable year.

A Condominium management association is defined as an organization organized and operated to provide for the acquisition, construction, management, maintenance and care of a Condominium, provided substantially all of the Units are used by individuals for residences. "Substantially all" the Units will be considered used by individuals for residences if at least eighty-five percent (85%) of total square footage of all units within the project is used, or is intended to be used, by individuals for residential purposes or purposes auxiliary to residential use, such as storage rooms, laundry and areas used by maintenance personnel.

An effective election under Section 528 will exempt from federal income taxation all amounts received by the Condominium management association as exempt function income. Exempt function income is defined as money received as membership dues, fees, or assessments from owners of condominium housing units. Income which is not exempt function income to the extent such income exceeds expenses properly allocable to such income is taxable. Examples of income which is not exempt function income are common charges paid by owners of commercial units, interest earned on reserve funds, amounts received from persons who are not members of the Condominium management association, amounts received for work done on privately owned property which is not Condominium management association property, and amounts received from members for special use of the Condominium management association's facilities, the use of which is not available to all members as a result of having paid the dues, fees, or assessments required to be paid by all members. If the Condominium management association fails to qualify for or properly elect treatment under Code Section 528 for a taxable year, it may be subject to federal income taxation.

You have advised me that you anticipate that greater than eighty-five percent (85%) of the square footage of the Units will be used for residential purposes. Our review of the documents referred to above indicates that the Association does meet all the organizational tests described above to qualify for exemption. Therefore, it is our opinion that the Association will not be subject

to federal income tax for the taxable years in which such election is in effect, except as noted below.

This opinion only relates to the specific tax matters discussed above which do not necessarily comprise all tax matters that may be of significance to the Purchasers of the Units. We express no view as to any federal, New York State or New York City tax consequences other than as explicitly discussed in the opinion or as to the tax status or tax consequences of the Offering Plan under the laws of the United States or any foreign jurisdiction. Therefore, it is strongly recommended that each prospective Purchaser of a Unit consult with their own tax advisor concerning the federal, New York State and New York City tax consequences of the purchase and ownership of a Unit in the Condominium. In no event will the Sponsor, Sponsor's counsel, the Board of Managers, counsel to the Board of Managers or any other person be liable if by reason of changes in fact or applicable law, regulations decisional law or Internal Revenue Service rulings, the tax consequences described above should change. No warranties are made that the tax laws upon which counsel bases this opinion will not change and no one else has been authorized to make any representations other than those contained herein.

This opinion has been prepared with the knowledge that it will be incorporated into the Offering Plan.

Very truly yours,

By: Richard Marans
Marans Weisz & Newman LLC

WORKING CAPITAL FUND

The Purchaser of each Unit shall be required to make a contribution at the Closing to the working capital fund of the Condominium (the "Working Capital Fund") in an amount equal to one (1) times the monthly Common Charges due with respect to such Unit as of the Closing. Sponsor will not be obligated to make any contributions to the Working Capital Fund, except to the extent it is funded by payment of Common Charges. The Working Capital Fund will be held and used for working capital, closing costs and adjustments, unanticipated increases in budgeted or additional Common Expenses, capital repairs or replacement or for such other appropriate purposes as will be determined by the Board of Managers. While Sponsor controls the Board of Managers, the Working Capital Fund will not be used to reduce estimated Common Charges. The Board of Managers will be able to utilize the money in the Working Capital Fund at any time and accordingly, no representation or warranty can be made and no assurance can be given as to the exact amount of funds available at any specific time and no minimum amount is represented or guaranteed. In no event shall any portion of the Working Capital Fund be used to pay any Common Charges attributable to Unsold Units.

Neither the Department of Law nor any government agency has passed upon the adequacy of the Working Capital Fund.

No representation or warranty is made that the Working Capital Fund will be, or is intended to be, adequate to cover current or future expenses, for the first or any subsequent year of Condominium Operation.

RESERVE FUND

A reserve fund is being established for the Condominium for major capital expenditures such as the renewal or replacement of building components or systems or the remedy of major building defects (the "Reserve Fund"). The Purchaser of each Unit shall be required to make a contribution at the Closing to the Reserve Fund in an amount equal to one (1) times the monthly Common Charges due with respect to such Unit as of the Closing. The Reserve Fund is funded through Common Charges. The Board of Managers, in its discretion, may decide in future years to increase or decrease the reserve fund line item in the Condominium's annual budget or issue Special Assessments to finance needed capital expenditures. While the Sponsor is in control of the Board of Managers, Sponsor will not use Reserve Fund monies to reduce common charges. Since the Building is being newly constructed, it is anticipated that the reserve fund as it accumulates will be sufficient to pay for the replacement of any capital items likely to be needed within the first five (5) years of Condominium operation.

Neither the Department of Law nor any government agency has passed upon the adequacy of the Reserve Fund.

No representation or warranty is made that the Reserve Fund will be, or is intended to be, adequate to cover current or future expenses, for the first or any subsequent year of Condominium Operation.

MANAGEMENT AGREEMENT, CONTRACTS AND LICENSES

The Condominium will enter into a one-year management agreement with Continental Building Management LLC with offices at 4916 3rd Avenue, Brooklyn, NY, effective as of the first Unit closing and shall continue in force until one (1) year from such date. The Board of Managers may terminate the management agreement without cause at any time. The annual fee under the management agreement is $36,000.00 to be paid in monthly installments of $3,000.00. The management fees are at prevailing rates. The agreement may be assigned to a competent managing agent at any time by giving thirty days' notice.

The Managing Agent and its principals have no relationship, past or present, to the Sponsor or principals of Sponsor, other than that the Managing Agent will be paid a fee for its services.

The Managing Agents duties include maintenance, decorations, repairs, cure violations, oversee service and maintenance contracts, purchase supplies, obtain insurance, pay bills, facilitate the Building's sales and leases, arrange moving in and out of units, billing and collections, attend to complaints, maintain accounting records, provide monthly statements, maintain books and records, assist in an annual audit and report, prepare a proposed budget, prepare Board or Unit Owner notices, assist in correcting the assessed valuation of units, and assist in financing. The Managing Agent will be reimbursed for costs and expenses. The Board of Managers will not be personally liable for the agreement. Each Unit Owner's liability under the agreement is limited to their Common Interest.

There are presently no contracts or licenses binding on the Condominium; the Offering Plan will be amended to disclose any.

IDENTITY OF PARTIES

Sponsor

The Sponsor of the Offering Plan is 3714 LIC DEVELOPMENT LLC, New York limited liability company. Sponsor's office address is 4918 3rd Avenue, Brooklyn, NY 11220. Sponsor or its affiliates have not been the sponsor of any other cooperative or condominium conversion plan within the last five (5) years except for where principal of Sponsor has been the principal of the offering. The principal of the Sponsor is Bentley Zhao, having an office address at is 4916 3rd Avenue, Brooklyn, NY 11220.

Mr. Zhao has been involved in the real estate business for over 14 years as an architect and developer in New York and New Jersey.

Mr. Zhao has been a principal of a sponsor during the past five (5) years for the following properties:

Condominium Plan	File No.	Accepted for Filing
WEST 45 409 West 45th Street New York, NY 10036	CD160098	8/25/16
ONXY SQUARE CONDOMINIUM 2128 Ocean Avenue Brooklyn, NY 11229	CD170091	8/23/17
424W52 CONDOMINIUM 242 West 52nd Street New York, NY 10019	CD180172	Pending

Mr. Zhao is current on his financial obligations to the above listed public offerings. There are no cooperative, condominium, or homeowners association, other than the subject Condominium, where the Sponsor, general partner, or principal of the Sponsor or holder of unsold shares, owns ten percent (10%) or more of the unsold shares or units as an individual, general partner, or principal.

There have been no prior bankruptcies, convictions, injunctions or judgments against the Sponsor, the principal of the Sponsor, entities in which the principals of the Sponsor were principals, and/or any individuals who own or control a ten percent (10%) or more equity interest in the Sponsor that would be material to the Offering Plan, or to an offering of securities generally and that occurred within the fifteen (15) years prior to the submission of this Offering Plan.

Attorney for Sponsor

Sponsor has retained the law firm of Marans Weisz & Newman LLC, 29 Broadway, Suite 2400, New York, New York 10006 (212-968-0244) to represent it in the preparation and consummation of the Offering Plan. The attorney who prepared the Offering Plan is Jonathan Pivovarov, Esq. This firm drafted the Declaration, the By-laws, this Offering Plan, the form of Purchase Agreement, the form of Unit Deed and all other documents necessary in connection with the formation of the Condominium, and is advising the Sponsor in connection with all legal matters incidental thereto. No separate counsel has been retained to represent the Condominium. Marans Weisz & Newman LLC has no financial relationship, past or present, in the Property or to the Sponsor, except that it is being paid a fee for its services. The law firm of Marans Weisz & Newman LLC shall serve as escrow agent for Sponsor and Purchaser.

Architect

Morali Architects, having an office at 505 8th Avenue, 22nd Floor, New York, NY 10018, prepared the Description of Property and Specifications and the Unit Floor Plans set forth in Part II of the Offering Plan. Morali Architects has no financial relationship with the Sponsor or principals of Sponsor, except in its capacity as architect, other than that he will be paid a fee for his services. The following is a representative list of Morali Architect's work; 80 South Street, 93 Bowery, 130 Bowery Street, 415 Greenwich, 88 Laight Street, and 110 East 42nd Street.

Selling Agent

Halstead Property Development Marketing, with offices at 445 Park Avenue, 10th Floor, New York, New York 10022, is the Selling Agent retained by the Sponsor in connection with the offering of Units. The Selling Agent is engaged in the brokerage and sale of residential properties in the New York metropolitan area. Selling Agent has no beneficial interest in the Sponsor and no interest in the profits of this offering plan other than the fee received as Selling Agent of the Condominium. Halstead Property Development Marketing and its principals have no prior felony convictions. During the past fifteen (15) years, there were no prior convictions, injunctions or judgments against Halstead Property Development Marketing or any of its principals that may be material to this Plan or to an offering of securities generally.

REPORTS TO UNIT OWNERS

The Board of Managers shall furnish to all Unit Owners, their mortgagees and the Department of Law of the State of New York (if and when required by law) and shall present annually (at the annual meeting) and when called for by a vote of the Unit Owners at any special meeting of the Unit Owners, a full and clear statement of the business conditions and affairs of the Condominium, including a balance sheet and profit and loss statement verified by an independent public accountant and a statement regarding any taxable income attributable to the Unit Owners. The Board of Managers, at least annually, shall fix and determine the annual budget and send a copy of the budget and any supplement to every Unit Owner and mortgagee. The total annual requirement shall be assessed as a single sum against all Units and prorated against each of the Unit according to the respective Common Interest apportioned to each Unit.

It is the obligation of the Board of Managers of the Condominium to give all Unit Owners annually:

(i) a financial statement of the Condominium prepared by a certified public accountant or public accountant within four (4) months from the end of such fiscal year; such statement shall be certified while the Sponsor is in control of the Board of Managers;

(ii) at least ten (10) but no more than twenty (20) days prior notice of the annual Unit Owners' meeting; and;

(iii) a copy of the proposed annual budget of the Condominium within sixty (60) days prior to the date set for adoption thereof by the Board of Managers. Such statement shall be certified while the Sponsor is in control of the Board of Managers.

DOCUMENTS ON FILE

Copies of this Offering Plan and all exhibits or documents submitted to the Department of Law in connection with the filing of the Offering Plan shall be made available for inspection by prospective Purchasers and by any person who shall have purchased a Unit offered under this Offering Plan, or shall have participated in the offering of such Unit, at the office of Sponsor during convenient weekday hours, and shall remain available without charge and copying at reasonable charge for a period of six (6) years from the date of the First Closing. Sponsor shall, within 180 days after the First Closing, deliver to the Board of Managers a copy of all documents filed with the appropriate recording officer at the time of the closing of the first Unit.

GENERAL

This Offering Plan does not knowingly omit any material fact or knowingly contain any untrue statement of a material fact. This Offering Plan does not contain a full summary of all of the provisions of the various documents referred to herein. Statements made as to the provisions of such documents are qualified in all respects by the contents of such documents.

There are no lawsuits or administrative or other proceedings, the outcome of which may materially affect this offering, the Property, the Condominium, the operation of the Condominium or Sponsor's capacity to perform its obligations under the Offering Plan, which have not been disclosed herein.

In accordance with the provisions of the laws of the United States and the State of New York, Sponsor represents that Sponsor will not discriminate against any person on the basis of race, creed, color, national origin, sex, age, disability, marital status, or other grounds prohibited by law in the sale of the Units offered by Sponsor pursuant to this Offering Plan.

The property was not the subject of any prior cooperative or condominium offerings. Other than any No-Action Letter as described herein, no contracts or agreements have been entered into, and no deposits or advances of funds have been accepted, for any Unit offered pursuant to this Offering Plan as of the date this Offering Plan is accepted for filing by the Department of Law.

All Units offered pursuant to this Offering Plan are vacant as of the date this Offering Plan is accepted for filing by the Department of Law.

Principals of Sponsor have executed the Certification of Sponsor and Principals set forth in Part II of the Offering Plan solely for Martin Act purposes. Consistent with a First Department decision in Board of Managers of 184 Thompson Street Condominium v. 184 Thompson Street Owner LLC, *et.al.*, 2013 N.Y. Slip Op 03574 (1st Dept. May 16, 2013), the principals of Sponsor expressly disclaim the existence of any private right of action for contract claims by individual Unit Owners (or a board on their behalf) in connection with or arising solely from their execution of the Certification of Sponsor and Principals, absent liability under another statute or under an alter-ego or other veil-piercing theory.

Sponsor reserves the right, from time to time prior to the Closing Date, without obtaining the consent of Purchasers, to revise the terms and conditions on which the Units offered hereby are sold, including changes affecting the rights, obligations, and liabilities of Purchasers. All material revisions will be contained in a duly filed amendment to this Offering Plan. If a material revision adversely affects the rights, obligations, or liabilities of the existing Purchasers, Purchasers will be given the right to rescind their Purchase Agreements and to receive a refund of their Deposit (with interest, if any earned thereon) within fifteen (15) days after the presentation of the amendment.

RESERVATION OF AIR AND DEVELOPMENT RIGHTS

Any portion of the unused floor area development rights that are now owned, subsequently acquired, or that may become available under the Zoning Resolution of the City of New York (the "Development Rights") shall be owned by the Sponsor, but may be utilized by Sponsor or any party acquiring the same from the Sponsor and merged into a zoning lot pursuant to the terms of a zoning lot development agreement or similar agreement or instrument (a "ZLDA"). If a ZLDA is a condition precedent to increasing Development Rights, Sponsor (including Sponsor's successors, assignees, or designees) may enter into a ZLDA without the consent of the Board of Managers or Unit Owners to increase Development Rights.

Sponsor or any entity to whom Sponsor conveys Development Rights shall have the right to amend the Declaration and any ZLDA that exists pertaining to the Building, in order to convey Development Rights. Sponsor or any entity to whom Sponsor conveys the Development Rights shall have the right to complete, file, and record all documents without the consent of the Unit Owners or the Board of Managers or any parties in interest to the Common Elements. The Unit Owners, the Board of Managers and/or any parties in interest to the Common Elements shall be deemed to have consented to the transfer of Development Rights and shall execute any documents evidencing said consent as are reasonably requested by Sponsor or any entity to whom Sponsor conveys the Development Rights.

In the event Development Rights are transferred to an adjoining premises, the light, air and views from the Building may be negatively impacted. Notwithstanding the foregoing, neither Sponsor nor any entity to whom Sponsor conveys the Development Rights to may utilize the Development Rights to increase the size, height, bulk or density of any portion of the Property. Sponsor does not anticipate any Development Rights to be available upon completion of construction.

SPONSOR'S STATEMENT OF BUILDING CONDITION

Sponsor adopts the Architect's Description of Property and Specifications set forth in Part II of this Offering Plan. Sponsor represents that, to the best of its knowledge, Morali Architects, having an office at 505 8th Avenue, 22nd Floor, New York, NY 10018, accurately states the description of the Property and its specifications, as it will be built, upon the plans that it has examined. See the sections "Description of Property and Improvements" and "Schedule A" set forth in Part I of the Offering Plan and see the "Description of Property and Building Condition," "Floor Plans," and "Declaration" set forth in Part II of the Offering Plan.

THE 37-14 34TH STREET CONDOMINIUM

OFFERING PLAN

PART II

FORM OF PURCHASE AGREEMENT

Purchaser(s)

With

3714 LIC DEVELOPMENT LLC

Sponsor/Seller

Unit Number ___

The 37-14 34th Street Condominium
37-14 34th Street
Long Island City, NY 11101

PURCHASE AGREEMENT

Unit Number ___
The 37-14 34th Street Condominium
37-14 34th Street
Long Island City, NY 11101

(to be executed in duplicate)

THIS PURCHASE AGREEMENT (this "Agreement"), made as of the day of , 20___, between 3714 LIC DEVELOPMENT LLC, a New York limited liability company, having an office at 4918 3rd Avenue, Brooklyn, NY 11220 (hereinafter, "Sponsor"), and _____, having an address at _____(hereinafter, "Purchaser").

W I T N E S S E T H:

1. Definitions. Terms used in this Agreement and not otherwise defined herein shall have the meanings set forth in the offering plan for The 37-14 34th Street Condominium (the "Condominium") (such plan, together with any amendments thereto filed prior to the date hereof, is hereinafter referred to as the "Offering Plan").

2. The Residential Unit. Sponsor hereby agrees to sell to Purchaser and Purchaser hereby agrees to acquire from Sponsor Condominium Unit No. ____ (the "Unit") at the Condominium (as designated in the Declaration), together with the undivided percentage of common interest in the Common Elements as set forth in the Schedule B to the Declaration and as set forth in the Offering Plan, upon and subject to the terms and conditions set forth herein.

3. Purchase Price.

3.1 The purchase price for the Residential Unit is $_____ (the "Purchase Price") payable as follows:

(a) $_____ (the "Deposit"), due upon the signing and submitting of this Agreement, receipt of which (subject to collection) is hereby acknowledged; and

(b) $_____ (the "Balance"), constituting the balance of the Purchase Price, payable at the closing as hereinafter provided.

3.2 All checks shall represent United States currency, be drawn on or issued by a New York bank that is a member of the New York Clearing House Association and shall be unendorsed. Checks for the Deposit shall be Purchaser's good check(s) or, at Sponsor's option, Purchaser's certified check(s) or an official bank check(s), made payable to the direct order of "Marans Weisz & Newman LLC, as escrow agent". Unless Sponsor elects for the Balance be paid by wire transfer, the check or checks for the Balance and all other sums due Sponsor pursuant to

this Agreement shall be good certified check of Purchaser or official bank or cashier's check, made payable to the direct order of "3714 LIC DEVELOPMENT LLC" (or such other party as Sponsor directs to Purchaser, in writing, prior to the date of closing of title). If any check is returned, dishonored or fails collection for insufficient funds or for any other reason, the Escrow Agent (as defined in Article 4) is authorized to deliver such check to Sponsor and Sponsor will have the choice of remedies set forth in the Offering Plan and in this Agreement with respect to an Event of Default (including without limitation, suing on such dishonored check or (at Sponsor's option) canceling this Agreement and returning the instrument to Purchaser without affording Purchaser a grace period to cure such default). Notwithstanding anything to the contrary stated herein, Sponsor shall have the right to have Purchaser pay the Balance in the form of wire transfer, certified check, bank check or any other form of payment in Sponsor's sole and absolute discretion.

4. Deposit.

4.1 The law firm of Marans, Weisz & Newman, LLC, with an address at 29 Broadway, Suite 2400, New York, New York 10006, telephone number 212–968–0244, shall serve as escrow agent (the "Escrow Agent") for Sponsor and Purchaser. Escrow Agent has designated Richard Marans, Esq., Daniel Weisz, Esq., Richard Newman, Esq. and Stavroula Tsolis, Esq. to serve as signatories on the "Escrow Account", as defined below. All designated signatories are admitted to practice law in the State of New York. Neither the Escrow Agent nor any authorized signatories on the account are the Sponsor, Selling Agent, Managing Agent, or any principal thereof, or have any beneficial interest in the in any of the foregoing.

4.2 Escrow Agent and all authorized signatories hereby submit to the jurisdiction of the State of New York and its Courts for any cause of action arising out of this Purchase Agreement or otherwise concerning the release of the Deposit from escrow.

4.3 The Escrow Agent has established the escrow account at Capital One Bank, N.A., 299 Park Avenue, New York, NY 10171, in the State of New York, a bank authorized to do business in the State of New York. The escrow account is entitled The 37-14 34th Street Condominium Escrow Account ("Escrow Account"). The Escrow Account is not an IOLA account. The Escrow Account is federally insured by the FDIC at the maximum amount of $250,000 per deposit; if Purchaser has an account at the escrow bank, then the Purchaser's account balance factors into the $250,000 FDIC insurance limit. Within five (5) business days after this Purchase Agreement has been executed by Purchaser, Seller, and Escrow Agent, Escrow Agent shall place the Deposit into the Escrow Account. Within ten (10) business days after the Deposit has been placed into the Escrow Account, Escrow Agent shall sent written notice to the Purchaser and Seller. The notice shall provide the account number and the initial interest rate to be earned by the Deposit.

4.4 All Deposits received from Purchaser shall be in the form of checks, money orders, wire transfers, or other instruments, and shall be made payable to or endorsed by the Purchaser to the order of Marans Weisz & Newman, LLC, as Escrow Agent.

4.5 The interest rate for all Deposits made into the Escrow Account shall be the prevailing rate for such accounts. Interest shall begin to accrue upon placing the Deposit into the Escrow Account. All interest earned thereon shall be paid to or credited to the Purchaser at closing.

No fees of any kind may be deducted from the Escrow Account, and the Sponsor shall bear all costs associated with the maintenance of the Escrow Account.

4.6 Within five (5) business days after the Purchase Agreement has been tendered to Escrow Agent along with the Deposit, the Escrow Agent shall sign the Purchase Agreement and place the Deposit into the Escrow Account. Within ten (10) business days of the placing the deposit in the Escrow Account, Escrow Agent shall provide written notice to Purchaser and Sponsor, confirming the Deposit. The notice shall provide the account number and the initial interest rate to be earned on the Deposit. Any Deposits made for upgrades, extras, or custom work shall be initially deposited into the Escrow Account, and released in accordance to the terms of the Purchase Agreement.

4.7 The Escrow Agent is obligated to send notice to the Purchaser once the Deposit is placed in the Escrow Account. If the Purchaser does not receive notice of such deposit within fifteen (15) business days after tender of the Deposit, Purchaser may cancel the Purchase Agreement within ninety (90) days after tender of the Purchase Agreement and Deposit to Escrow Agent. Complaints concerning the failure to honor such cancellation requests may be referred to the New York State Department of Law, Real Estate Finance Bureau, 28 Liberty Street, 21st Floor, New York, NY 10005. Rescission shall not be afforded where proof satisfactory to the Attorney General is submitted establishing that the Deposit was timely placed in the Escrow Account in accordance with the New York State Department of Law's regulations concerning Deposits and requisite notice was timely mailed to the Purchaser.

4.8 All Deposits, except for advances made for upgrades, extras, or custom work received in connection with the Purchase Agreement, are and shall continue to be the Purchaser's money, and may not be comingled with any other money or pledged or hypothecated by Sponsor, as per GBL § 352-h. Advances made for upgrades, extras, or custom work remains the Purchaser's money until used to execute the requested work. In the event a rescission right is exercised, all Deposits and advances not used to execute the requested work will be released in accordance with the terms of the Purchase Agreement. In the event the Offering Plan is abandoned, all Deposits and advances will be released in accordance with the terms of the Purchase Agreement

4.9 Under no circumstances shall Sponsor seek or accept release of the Deposit of a defaulting Purchaser until after consummation of the Offering Plan, as evidenced by the acceptance of a post-closing amendment by the New York State Department of Law. Consummation of the Offering Plan does not relieve the Sponsor of its obligations pursuant to GBL §§ 352-e(2-b) and 352-h.

4.10 The Escrow Agent shall release the Deposit if so directed:

(a) Pursuant to terms and conditions set forth in the Purchase Agreement in Section 4 upon closing of title to the Unit; or

(b) In a subsequent writing signed by both Sponsor and Purchaser; or

(c) By a final, non-appealable order or judgment of a court.

If the Escrow Agent is not directed to release the Deposit pursuant to paragraphs 4.10 (a-c) above, and the Escrow Agent receives a request by either party to release the Deposit, then the Escrow Agent must give both the Purchaser and Sponsor prior written notice of not fewer than thirty (30) days before releasing the Deposit. If the Escrow Agent has not received notice of objection to the release of the Deposit prior to the expiration of the thirty (30) day period, the Deposit shall be released and the Escrow Agent shall provide further written notice to both parties informing them of said release. If the Escrow Agent receives a written notice from either party objecting to the release of the Deposit within said thirty (30) day period, the Escrow Agent shall continue to hold the Deposit until otherwise directed pursuant to paragraphs 4.10 (a) through 4.10 (c) above. Notwithstanding the foregoing, the Escrow Agent shall have the right at any time to deposit the Deposit contained in the Escrow Account with the clerk of the county where the Unit is located and shall give written notice to both parties of such deposit.

4.11 Sponsor shall not object to the release of the Deposit to:

(a) a Purchaser who timely rescinds in accordance with an offer of rescission contained in the Offering Plan or an Amendment to the Offering Plan; or

(b) all Purchasers after an Amendment abandoning the Offering Plan is acceptance for filing by the Department of Law.

The Department of Law may perform random reviews and audits of any records involving the Escrow Account to determine compliance with all applicable statutes and regulations.

4.12 Any provision of the Purchase Agreement or separate agreement, whether oral or in writing, by which a Purchaser purports to waive or indemnify any obligation of the Escrow Agent holding any Deposit in trust is absolutely void. The provisions of the Attorney General's regulations and GBL §§ 352-e(2-b) and 352-h concerning escrow trust funds shall prevail over any conflicting or inconsistent provisions in the Purchase Agreement, Plan, or any amendment thereto. However, this shall only apply to initial Purchasers who purchaser their Unit from Sponsor.

4.13 The Escrow Agent shall maintain all records concerning any escrow account for seven years after release of the funds. Upon the dissolution of any law firm which was the Escrow Agent, the former partners or members of the firm shall make appropriate arrangements for the maintenance of these records by one of them or by the successor firm and shall notify the Department of Law of such transfer.

4.14. A fiduciary relationship shall exist between Escrow Agent and Purchaser, and Escrow Agent acknowledges its fiduciary and statutory obligations pursuant to GBL §§ 352-e(2-b) and 352(h).

4.15 Escrow Agent may rely upon any paper or document which may be submitted to it in connection with its duties under this Purchase Agreement and which is believed by Escrow Agent to be genuine and to have been signed or presented by the proper party or parties and shall have no liability or responsibility with respect to the form, execution, or validity thereof.

4.16 Sponsor agrees that it shall not interfere with Escrow Agent's performance of its fiduciary duties and statutory obligations as set forth in GBL §§ 352-e(2-b) and 352-(h) and the New York State Department of Law's regulations.

4.17 Sponsor shall obtain or cause the selling agent under the Offering Plan to obtain a completed and signed Form W-9 or W-8, as applicable, from Purchaser and deliver such form to Escrow Agent together with the Deposit and this Purchase Agreement.

4.18 Prior to release of the Deposit, Escrow Agent's fees and disbursements shall neither be paid by Sponsor from the Deposit nor deducted from the Deposit by any financial institution under any circumstance.

4.19 Sponsor agrees to defend, indemnify, and hold Escrow Agent harmless from and against all costs, claims, expenses and damages incurred in connection with or arising out of Escrow Agent's responsibilities arising in connection with this Purchase Agreement or the performance or non-performance of Escrow Agent's duties under this Purchase Agreement, except with respect to actions or omissions taken or suffered by Escrow Agent in bad faith or in willful disregard of the obligations set forth in this Purchase Agreement or involving gross negligence of Escrow Agent. This indemnity includes, without limitation, disbursements and attorneys' fees either paid to retain attorneys or representing the hourly billing rates with respect to legal services rendered by Escrow Agent to itself.

4.20 Nothing contained herein shall diminish or impair the Sponsor's statutory obligation to each Purchaser pursuant to GBL §352-h to hold in trust all deposits, advances or payments made in connection with the offer until consummation of the transaction with such Purchaser. Consummation of the Offering Plan does not relieve Sponsor of its obligations pursuant to GBL §352-h. Funds from any escrow account remain the property of the Purchaser until employed in connection with the consummation of the transaction. Such funds shall not be a part of the estate of the Sponsor or the escrow agent upon any bankruptcy, incapacity or death.

5. Closing Date and Place.

5.1 The closing of title shall be held at the offices of Marans Weisz & Newman LLC, 29 Broadway, Suite 2400, New York, New York 10006 (or such other place in the City and State of New York as Sponsor may designate to Purchaser) and on such date and hour as Sponsor may designate to Purchaser on not less than thirty (30) days' prior notice. Sponsor may, from time to time, adjourn such date and hour upon reasonable prior notice to Purchaser, which notice shall fix a new date (and hour and place, if appropriate) for the closing of title (but in no event may Sponsor adjourn the date originally set for a closing, once set, for more than twelve (12) months in the aggregate without the consent of Purchaser).

5.2 Whenever used herein, the terms "Closing Date" or "closing of title" or words of similar import shall mean the date on which the deed to the Unit is delivered to Purchaser.

6. Delivery of Deed and Power of Attorney.

6.1 At the closing of title, Sponsor shall deliver to Purchaser a bargain and sale deed with covenants against grantor's acts conveying fee simple title to the Unit to Purchaser, which deed shall be in substantially the form contained in Part II of the Offering Plan, and Sponsor and Purchaser shall execute the deed and have the same acknowledged, in form for recording.

6.2 At the closing of title, Purchaser shall execute and acknowledge a power of attorney to the Board of Managers, prepared by Sponsor and in substantially the form contained in Part II of the Offering Plan.

6.3 The executed deed and power of attorney shall be delivered to the representative of the title company insuring Purchaser's title (or if no such representative is present, then to Sponsor's attorney) for recording in the City Register's Office, which recording shall be at Purchaser's expense. After being recorded: (i) the deed shall be returned to Purchaser; and (ii) the power of attorney in favor of the Board of Managers shall be returned to the Board (or as the Board of Managers shall direct).

6.4 Sponsor shall deliver to Purchaser a certification stating that Sponsor is not a foreign person in the form then required by the Internal Revenue Service and each party shall execute, acknowledge and deliver to the other party such instruments, and take such other actions, as such other party may reasonably request in order to comply with Internal Revenue Code §6045(e), as amended, or any successor provision or any regulations promulgated pursuant thereto, insofar as the same requires reporting of information in respect of real estate transactions.

7. State of Title.

7.1 At the closing of title, Sponsor shall convey to Purchaser fee simple title to the Unit, free and clear of all encumbrances, subject only to the Permitted Exceptions contained in the Offering Plan. Any lien, encumbrance or condition to which title is not to be subject shall not be an objection to title if: (a) the instrument required to remove it of record is delivered at or prior to the closing of title to the proper party or to Purchaser's title insurance company, together with the recording or filing fee; or (b) Purchaser's title insurance company or any other reputable title company licensed to do business in the State of New York will insure Purchaser, at the company's regular rates and without additional premium, that it will not be collected out of, or enforced against, the Unit; or (c) Purchaser's title insurance company is unwilling to issue the affirmative insurance described in subsection (b) at its regular rates and without additional premium, and the title insurance company referenced in Part I of the Offering Plan would be willing to do so at its regular rates and without additional premium.

7.2 Sponsor shall be entitled to adjourn the closing to remove or correct any defect in title which is not set forth in the Permitted Exceptions. However, if such defect existed at least ten (10) days prior to the closing and Purchaser, or Purchaser's attorney, failed to send Sponsor's attorney written notice of such defect in title at least ten (10) days prior to the closing, then, for purposes of Article 12 below, Purchaser shall be deemed at fault for not having sent timely notice, and the closing adjournment to allow Sponsor to correct or remove such title defect shall be considered as being at the request of Purchaser.

7.3 The covenants in the deed will be solely for the personal benefit of Purchaser and will not inure to the benefit of Purchaser's successors or subrogees. In the event of

a claimed breach of any covenant of the grantor contained in the deed, Purchaser must first seek recovery against Purchaser's title insurance company before proceeding against Sponsor, it being agreed that the liability of Sponsor will be limited to any loss or damage not covered by such title insurance. In the event that Purchaser elects not to purchase title insurance, then the liability of Sponsor shall be limited to any loss or damage that would not have been covered by the title insurance that was available to Purchaser at the closing. The terms of any marked-up title binder of any title insurance company authorized to do business in New York State issued in connection with any Unit shall be conclusive evidence of the title insurance coverage that was available to Purchaser. The provisions of this Article 7.3 shall survive the closing of title.

8. Closing Adjustments.

8.1 The following costs with respect to the Unit shall be apportioned between Sponsor and Purchaser as of the Closing Date:

(a) Real estate taxes and assessments, if any (including water charges and sewer rents, if separately assessed), on the basis of the period for which assessed;

(b) Common Charges for the month in which title closes; and

(c) Accrued fees and any other charges pursuant to an Interim License or Use and Occupancy Agreement, if any, covering the Unit.

8.2 If the Unit has been separately assessed but the closing of title occurs before the tax rate is fixed, adjustment of taxes shall be based upon the latest tax rate applied to the most recent applicable assessed valuation. Installments for tax assessments due after the delivery of the deed, if any, shall be paid by Purchaser and shall not be considered a defect in title; however, the installment for the then current period shall be apportioned appropriately. If the Unit has not been separately assessed as of the Closing Date for the then current tax period, the adjustment hereof shall be based upon the Property's actual taxes and assessment for such period prorated to the Unit in the manner set forth in the By-Laws and in Part I of the Offering Plan. In addition, if separate assessments have not been made prior to the closing of title, the Board of Managers will collect from Purchaser at Closing and will place in escrow an amount equal to the Unit Owner's estimated proportionate share of the real estate taxes, if any, projected to be due for the entire Property for the half of the tax year next commencing after the Closing of said Unit (i.e., for either the first half or second half, depending on when the Unit closes).

8.3 Sponsor shall remit or cause to be remitted to Purchaser an amount equal to interest, if any, earned on the Deposit, on or promptly after the Closing Date.

8.4 In the event that Purchaser fails to close title to the Unit on the date originally scheduled for the closing of title, postpones the closing for any reason, or is deemed at fault for not timely sending notice of a title defect as provided in Article 7 above, and title thereafter closes, then:

(a) the closing apportionments shall be made as of the originally scheduled closing date regardless of when the actual closing of title occurs; and

(b) the apportionment of those items set forth in this Article 8 shall be: (i) made as of the originally established closing date rather than as of the date the closing actually occurs, (ii) Purchaser shall pay Sponsor, at Closing, interest on the unpaid balance of the purchase price for each day starting from (and including) the originally scheduled Closing Date to (and including) the day before the actual Closing Date, where interest shall be equal to the highest legal rate as of the Closing Date (the current rate is 16% per annum); and (iii) Purchaser shall pay Sponsor's counsel $500.00 for each adjournment. Nothing herein shall be construed to mean that the Sponsor must grant an adjournment of title when requested to do so. If, through no fault of Purchaser, Sponsor postpones the originally scheduled Closing Date, these provisions shall apply to the rescheduled Closing Date if Purchaser fails for any reason to close title to the Unit on the rescheduled Closing Date.

8.5 If at a Purchaser's request Sponsor grants an adjournment or adjournments of their closing of title in excess of five (5) days in the aggregate, the Sponsor has the option of collecting an additional five percent (5%) of the purchase price of the Unit as an additional Deposit.

8.6 Adjustments and apportionments shall be calculated on the basis of the actual number of days in the period for which payments were made or are due, as the case may be. The "Customs in Respect to Title Closings" recommended by The Real Estate Board of New York, Inc., as amended to date, shall apply to the adjustments and other matters therein mentioned, except as aforesaid and as otherwise provided herein or in the Offering Plan.

8.7 Any errors or omissions in calculating apportionments at closing shall be corrected, and payment shall be made to the proper party, promptly after discovery. This provision shall survive the closing.

9. Closing Costs.

Purchaser shall be required to pay certain costs in connection with the purchase of the Unit, in addition to any net credit in favor of Sponsor that may result from the closing adjustments and any interest or late closing charge described in Article 8. Other than any such net credit in favor of Sponsor that may result from the closing adjustments (or certain other fees which may be payable prior to the closing, as described below), all such closing costs shall be paid by Purchaser, at closing, by Purchaser's unendorsed, personal certified check or by official bank check, in either event drawn only upon a bank that is a member of the New York Clearing House Association. Such closing costs will include the following, the amounts of which (where applicable) are based on rates in effect on the date hereof and are subject to change without prior notice:

9.1 If Purchaser elects to obtain fee title insurance, Purchaser will pay a premium to the title company for such insurance, which will vary depending upon the amount of insurance purchased.

9.2 Purchaser will pay a fee to the City Register for recording the deed and the power of attorney, and will pay a filing fee for the RP-5217 form. In addition, Purchaser's title insurance company may charge various fees and service charges in connection with such recordings and filings, all of which shall be payable by Purchaser.

9.3 If Purchaser obtains a mortgage loan, Purchaser shall pay all closing costs associated with such loan, which may include, but need not be limited to, the following:

(a) a fee and service charge for recording the mortgage;

(b) a mortgage recording tax in the amount provided for by law,

(c) to Sponsor, a sum equal to the full amount (but not in excess thereof) of the partial mortgage recording tax credit provided by §339-ee(2) of the New York Condominium Act, to the extent the same is or becomes available, as a reimbursement for the mortgage recording taxes previously paid (such credit is based, in general, on the Common Interest of the Units being purchased multiplied by a portion of the mortgage tax previously paid on account of pre-existing mortgages on the Property), if applicable;

(d) the premium for mortgage title insurance, if required by Purchaser's lender;

(e) such other costs and expenses in connection with such loan as determined by Purchaser's lender.

9.4 Purchaser will be required to pay the amount of $2,500.00 to Marans Weisz & Newman LLC, Sponsor's counsel, for each Unit purchased hereunder, in order to defray Sponsor's legal fees for services in connection with preparing the deed and power of attorney and for coordinating and attending the closing. If Purchaser obtains financing and the lender is unwilling to close at the offices of Sponsor's counsel or if Purchaser otherwise requests that the Closing occur other than at the office of Sponsor's counsel (or such other place as Sponsor may designate in its closing notice) and Sponsor in its sole discretion consents to such request, the closing may be held elsewhere in New York City, provided that Purchaser shall pay Sponsor's counsel a travel fee of $500.00 and an additional $500.00 if the Closing is held outside New York City. In addition, if Sponsor, in its sole discretion, consents to a Purchaser's request for an assignment of this Agreement, or for the addition, deletion or substitution of names on this Agreement (or Purchaser otherwise exercises its limited right with respect to an assignment as provided in Section 23.4 hereof), a fee of $1000.00, shall be payable by Purchaser to Sponsor's counsel, for preparation of an assignment agreement. Purchaser may be required to pay more than one fee pursuant to the preceding sentence and forgoing provisions with respect to a single Unit. At Sponsor's option in its sole discretion, any one or more of the foregoing fees to be paid to Sponsor's counsel shall be paid by Purchaser in advance, prior to closing, upon notice to Purchaser. In the event Purchase is in default hereunder and Sponsor requests its counsel to send a default letter, Purchaser shall be obligated to pay $1,000.00 to attorneys for Sponsor for the preparation of a letter of default. Purchaser shall be obligated to pay an ACRIS preparation fee of $250.00. Notwithstanding the foregoing, Purchaser is responsible for all fees described herein and in the Closing Costs and Adjustments section of the Offering Plan, whether or not such costs are set forth in this Agreement.

9.5 Purchaser shall make a contribution to the Working Capital Fund and Reserve Fund of the Condominium, payable to the Board of Managers, each in the sum of one months' common charges then in effect for the Unit, as the same may be amended from time to time.

9.6 Purchaser shall pay to the Board of Managers the Common Charges for the Unit for the first full month following the month in which title closes.

9.7 Purchaser shall pay the Real Estate Transfer Tax due to the State of New York (the so-called "deed stamps" and, if applicable, the so-called "mansion tax"), the Real Property Transfer Tax due to the City of New York and any other real property transfer tax due to the City or State of New York. Purchaser agrees to indemnify and hold Sponsor harmless from and against any and all liabilities and expenses (including, without limitation, reasonable legal fees and disbursements) incurred by Sponsor by reason of the non-payment by Purchaser of any of the taxes Purchaser is obligated to pay hereunder in connection with the purchase of the Unit. Purchaser's obligations to pay the taxes described in this Article 9.7 and to indemnify Sponsor as herein provided shall survive the closing of title.

10. Transfer Tax Returns. At the closing, Purchaser shall duly complete and sign before a notary public the real property transfer tax return required to be filed with The City of New York ("RPT Form") and Purchaser shall duly complete and sign the Combined Real Estate Transfer Tax Return and Credit Line Mortgage Certificate ("Combined Tax Form") required to be filed with the Department of Taxation and Finance of the State of New York (the "Tax Department"), or such other forms as may then be required by law. The RPT Form and Combined Tax Form shall be delivered at closing to the representative of Purchaser's title insurance company (or, if none, to Sponsor's attorney) for filing with the proper governmental officer. Sponsor will similarly execute all of such forms and other documents required in connection with recording of the deed including, without limitation, smoke detector and multiple-dwelling affidavits.

11. The Offering Plan.

11.1 Purchaser acknowledges having received and read a copy of the Offering Plan, including all amendments thereto, if any, filed prior to the date hereof with the Department of Law of the State of New York, at least three (3) business days before submitting this Agreement. If, however, Purchaser did not receive a copy of the Offering Plan at least three (3) business days before submitting this Agreement, Purchaser may rescind this Agreement, by sending written notice of same to Sponsor by certified or registered mail, return receipt requested, reputable overnight courier or by personal delivery, in either case within seven (7) days of Purchaser's submission of this Agreement.

11.2 The Offering Plan is incorporated herein by reference and made a part hereof with the same force and effect as if set forth herein at length. In the event of any inconsistency between the provisions of this Agreement and the Offering Plan, the Offering Plan shall govern, except with respect to express modifications to the terms of the Offering Plan included in this Agreement and agreed to by Sponsor and Purchaser, in which case such modifications will govern.

11.3 Purchaser hereby adopts, accepts and approves the Offering Plan (including, without limitation, the Declaration, By-Laws and Rules and Regulations contained therein) and agrees to abide and be bound by the terms and conditions thereof, as well as all amendments to the Offering Plan duly filed by Sponsor.

12. Default by Purchaser. (a) Any of the following shall constitute an "Event of Default" hereunder:

(i) Purchaser's failure to pay the Balance or any closing apportionment or closing cost required to be paid by Purchaser as stated herein on the Closing Date designated by Sponsor or the dishonor of any check given by Purchaser to Sponsor; or

(ii) the failure to pay, perform or observe any of Purchaser's other obligations hereunder; or

(iii) if Purchaser is or becomes the tenant of record of the Unit, Purchaser's failure to pay rent or to otherwise comply with Purchaser's lease or tenancy obligations; or

(iv) if Purchaser is or becomes the tenant of record of the Unit and Purchaser vacates or abandons the Unit; or

(v) Purchaser's assignment of any of Purchaser's property for the benefit of creditors, or Purchaser's filing a voluntary petition in bankruptcy; or

(vi) if a non-bankruptcy trustee or receiver is appointed over Purchaser or Purchaser's property, or an involuntary petition in bankruptcy is filed against Purchaser; or

(vii) if a judgment or tax lien is filed against Purchaser and Purchaser does not pay or bond the same within thirty (30) days.

(b) TIME IS OF THE ESSENCE with respect to Purchaser's obligations to pay the Balance and to pay, perform or observe Purchaser's other obligations under this Agreement. Upon the occurrence of an Event of Default, Purchaser shall have thirty (30) days from the giving of written notice of such default to cure the specified default. If the default is not cured within such thirty (30) days, TIME BEING OF THE ESSENCE, then Sponsor, in its sole discretion, may thereupon terminate this Agreement. If Sponsor so elects to terminate, this Agreement shall be deemed terminated, and Sponsor shall have the right to retain, as and for liquidated damages, the Deposit (and any interest earned of the Deposit, if any) plus the costs incurred by Sponsor for any special work, if any, in the Unit ordered by the Purchaser. Upon the termination of this Agreement, Purchaser and Sponsor will be released and discharged of all further liability and obligations hereunder and under the Offering Plan, and the Unit may be sold to another as though this Agreement had never been made, and without accounting to Purchaser for any of the proceeds for such sale.

(c) Sponsor and Purchaser each hereby agree and acknowledge that it would be impractical and/or extremely difficult to fix or establish the actual damage sustained by Sponsor as a result of a default by a Purchaser hereunder, and that, subject to the provision of Section 11(d) below, the Deposit (including all interest, if any) shall constitute and be deemed to be the reasonable and agreed upon liquidated damages of Sponsor in respect of the possible loss of a timely closing, the possible fluctuation of values, additional carrying costs of the Unit and other expenses that may be incurred, including, without limitation, attorneys' fees, and shall be paid by Purchaser to Sponsor. The payment of the Deposit (including all interest, if any) as liquidated

damages is not intended to be a forfeiture or penalty, but is intended to constitute liquidated damages to Sponsor.

(d) NEITHER SPONSOR NOR PURCHASER SHALL CHALLENGE THE VALIDITY OF THE PROVISIONS OF THIS AGREEMENT OR THE OFFERING PLAN WITH RESPECT TO LIQUIDATED DAMAGES OR ANY RIGHT OF SPONSOR SET FORTH HEREIN OR THEREIN TO RETAIN THE DEPOSIT IN THE EVENT OF A PURCHASER DEFAULT. SUCH PROVISIONS HAVE BEEN AGREED TO VOLUNTARILY, AFTER NEGOTIATION, WITHOUT DURESS OR COERCION BY ANY PARTY UPON ANY OTHER PARTY, AND WITH EACH PARTY HAVING BEEN (OR HAVING HAD FULL AND ADEQUATE OPPORTUNITY TO BE) REPRESENTED AND ADVISED BY COUNSEL, ACCOUNTANTS, BROKERS, APPRAISERS AND OTHER EXPERTS AND ADVISORS OF ITS OWN CHOOSING.

13. Agreement Subject to Lien of Mortgage. No lien or encumbrance shall arise against the Property or the Unit as a result of this Agreement or any money deposited hereunder, except as hereinafter set forth. In furtherance and not in limitation of the provisions of the preceding sentence, Purchaser agrees that the provisions of this Agreement are and shall continue to be subject and subordinate to the lien of any mortgage heretofore or hereafter made and any payments or expenses already made or incurred or which hereafter may be made or incurred, pursuant to the terms thereof, or incidental thereto, or to protect the security thereof, to the fullest extent thereof, without the execution of any further legal documents by Purchaser. Sponsor shall, at its option, either satisfy such mortgages or obtain a release of the Unit and its undivided interest in the Common Elements from the lien of such mortgages on or prior to the Closing Date, unless, if Purchaser is obtaining financing on the Unit, Purchaser assumes such mortgages (at Sponsor's discretion). The existence of any mortgage or mortgages encumbering the Property, or portions thereof, other than the Unit and its undivided interest in the Common Elements, shall not constitute an objection to title or excuse Purchaser from completing payment of the Purchase Price or performing all of Purchaser's other obligations hereunder or be the basis of any claim against, or liability of, Sponsor, provided that any such mortgage is subordinated to the Declaration, or the Unit is released from, or not subject to, the lien of such mortgage at closing (unless Purchaser has assumed the continuation of a mortgage lien encumbering such Unit as hereinabove described).

14. Agreement Subject to Plan Being Effective. The performance by Sponsor of its obligations under this Agreement is contingent upon the Offering Plan having been declared effective in accordance with the terms and provisions of the Offering Plan (as the same may be amended from time to time). The Offering Plan may be withdrawn or abandoned by Sponsor only under certain conditions and at certain times, as set forth in the Offering Plan. If the Offering Plan is abandoned or if, after being declared effective, the Offering Plan is not consummated for any reason and Purchaser is not in default under this Agreement beyond any applicable grace period, this Agreement shall be deemed cancelled and the Deposit, together with interest, if any, earned thereon, shall be returned to Purchaser. Upon such return, neither party shall have any further rights, obligations or liability to or against the other and the parties shall be released and discharged from all obligations and liability under this Agreement and the Offering Plan.

15. Sponsor's Inability to Convey the Unit. If Sponsor is unable to deliver title to the Unit to Purchaser in accordance with the provisions of this Agreement and the Offering Plan by reason of a defect in title, substantial damage or destruction of the Building by fire or other

casualty, or the taking of any material portion of the Property by condemnation or eminent domain, Sponsor shall not be obligated to bring any action or proceeding or otherwise incur any cost or expense of any nature whatsoever in excess of its obligations set forth in the Offering Plan in order to cure such inability. If Sponsor is not so obligated under the Offering Plan and notifies Purchaser of its election not to cure such inability, and Purchaser is not in default hereunder, Purchaser's sole remedy shall be to either (a) take title to the Unit subject to such inability (without any abatement in or credit against the Purchase Price, or any claim or right of action against Sponsor for damages or otherwise) or (b) terminate this Agreement. If Purchaser so elects to terminate this Agreement, Sponsor shall, within thirty (30) days after receipt of notice of termination from Purchaser, return the Deposit to Purchaser, together with interest, if any, earned thereon. Upon making such payment, this Agreement shall be terminated and neither party shall have any further rights, obligations or liability to or against the other and the parties shall be released and discharged from all obligations and liability under this Agreement and the Offering Plan. The foregoing remedy must be exercised by written notice sent by Purchaser to Sponsor within ten days after the giving of Sponsor's notice of election not to cure such inability, failing which it shall be conclusively deemed that Purchaser elected the first remedy described in clause (a) above, i.e., to acquire title subject to such inability.

16. Fixtures, Appliances and Personal Property. Only those fixtures, appliances and items of personal property that are described in the Offering Plan as being included in the Unit are included in the sale of the Unit pursuant to this Agreement. No portion of the Purchase Price shall be attributable to such items.

17. Construction.

17.1 The construction of the Building and the Unit, including the materials, equipment and fixtures to be installed therein, shall be in accordance with the Offering Plan and the Plans and Specifications (as defined in the Offering Plan), subject to the right of Sponsor to amend the Offering Plan and the Plans and Specifications in order to substitute materials, equipment or fixtures of Equal or Better Quality, provided that the approval of any governmental authorities having jurisdiction is first obtained (if required). The issuance of a temporary or final Certificate of Occupancy for the Building shall be deemed presumptive evidence that the Building and the Unit have been fully completed in accordance with the Offering Plan and the Plans and Specifications. However, nothing herein contained shall excuse Sponsor from its obligation to correct any defects in construction in accordance with the conditions set forth in the section "Rights and Obligations of Sponsor" in the Offering Plan.

17.2 The construction of the Building and the Unit and the correction of any defects in the construction thereof to the extent required under the Offering Plan are the sole responsibility of Sponsor. Purchaser acknowledges and agrees that Sponsor will not be liable for, and will have no obligation to correct, certain immaterial variations from the Offering Plan and Plans and Specifications as indicated in the section of "Rights and Obligations of Sponsor" and will only be responsible to correct any construction defects to the extent, and on the terms and conditions, set forth in such Section or as otherwise required under applicable law.

17.3 The closing of title shall occur only after, or concurrently with, compliance with the prerequisites set forth under the Offering Plan. As a result, if all other prerequisites not involving the construction of the Unit are met, Purchaser shall be obligated to close and complete

payment of the full Purchase Price (without any credit against or abatement in the Purchase Price and without any provision for escrow) once a temporary or final Certificate of Occupancy is issued for the Unit (notwithstanding any construction items noted on Purchaser's Inspection Report (as hereinafter defined) remaining for Sponsor to complete and/or correct in accordance with its obligations under the Offering Plan, and notwithstanding the incomplete construction and/or decoration of any other portions of the Building not preventing Purchaser's occupancy of the Unit).

17.4 Sponsor has projected that, based upon currently anticipated schedules, construction of the Building will be sufficiently completed to permit closings of Units to begin pursuant to the Offering Plan; see the section "Procedure to Purchase". Purchaser will be offered a right of rescission if: (i) the actual date of closing of title to the first Residential unit; or (ii) the projected date of closing of title to the first Residential unit occurs later than twelve (12) months after the projected date for the first closing. If the Offering Plan is amended to provide for a later projected date for the first closing, purchasers will be entitled to an offer of rescission if the first closing occurs more than twelve (12) months beyond that amended, later date. However, if the first closing occurs before twelve (12) months after the projected date for the first closing, Sponsor may schedule the closings of title to other Units significantly later than such date. Sponsor is not obligated to schedule your closing within any specified time frame or to ensure that closing of title to your Unit will occur by any date certain. The actual date for the First Closing is only an estimate and is not guaranteed or warranted, and may be earlier or later depending on the progress of construction and compliance with the other prerequisites described in the Offering Plan. Purchaser acknowledges that construction may be delayed by weather, casualty, labor difficulties (including work stoppages and strikes), late delivery or inability to obtain on a timely basis or otherwise materials or equipment, governmental restrictions, or other events beyond Sponsor's reasonable control. Purchaser further acknowledges that the units in the Building will be completed at varying times over a period that could extend well beyond the First Closing. The order in which these units will be completed is in the discretion of Sponsor. Purchaser acknowledges that except as otherwise expressly provided in the Offering Plan, Purchaser shall not be excused from paying the full Purchase Price, without credit or set-off, and shall have no claim against Sponsor for damages or losses, in the event that the First Closing occurs substantially earlier or later than the projected date or the time to complete or to close title to the Unit is accelerated, delayed or is postponed by Sponsor, Purchaser's rights as set forth in Plan in respect thereof being in lieu of any other rights or remedies which may be available pursuant to any applicable law, regulation, statute or otherwise, all of which are hereby expressly waived by Purchaser.

17.5 Sponsor is obligated to construct the Building in accordance with all applicable codes, and filed building plans and specifications, as well as the provisions of the Offering Plan.

18. Warranties of Construction. The Housing Merchant Implied Warranty (General Business Law Article 36-B) does not apply to this offering because that statue applies only to new single family homes or new for sale units in a multi-unit residential structure which is five (5) stories or less in which title is transferred to Purchasers under a cooperative or condominium regime. As the Building is greater than five (5) stories, this statute is not applicable. Where the Housing Merchant Implied Warranty does not apply, a common law implied warranty does not exist; therefore, unless a warranty is expressly provided by Sponsor, none such exists. See Fumarelli v Marsam Dev., 92 NY2d 298, 301 [1998]; Bd. of Managers of Beacon Tower

Condominium v 85 Adams St., LLC, 136 AD3d 680 [2d Dept 2016]; Pine St. Homeowners Ass'n v 20 Pine St. LLC, 109 AD3d 733 [1st Dept 2013]. Sponsor does not warrant the materials or workmanship of construction in Units, Limited Common Elements, or Common Elements. Sponsor does not warrant the materials, workmanship, installation or operation of any appliances, equipment or fixtures. Nevertheless, Sponsor has the absolute obligation to design and build the Building in accordance with applicable law, codes, regulations, filed plans and specifications, and locally accepted building practices for items which are not covered by codes. Sponsor's obligations, regardless of any limitations in any warranty or in the Offering Plan, cannot go below the duty to construct the Building in accordance with all applicable Laws and the Plans and Specifications, and any conflict between any such disclosures and Sponsor's obligation to construct the Building in accordance with all applicable Laws and the Plans and Specifications shall be resolved in favor of the latter. NO DISCLAIMER OR LIMITATION OF LIABILITY ON SPONSOR'S PART SHALL APPLY TO SPONSOR'S OBLIGATIONS UNDER ALL APPLICABLE STATUTES, LAWS AND REGULATIONS. Purchasers may have a claim under a breach of contract theory in the event Sponsor does not fulfill their obligation to have the building designed and built in accordance with applicable law, codes, regulations, filed plans and specifications, and locally accepted building practices for items which are not covered by codes or otherwise fails to fulfill its obligations under the Offering Plan or Purchase Agreement. In addition, Purchasers may utilize any applicable warranties provided by a manufacturer or contractor for the defective materials or workmanship; Sponsor is obligated to assign any warranties provided by manufacturers and contractors. Notwithstanding the foregoing, in the event that Purchaser or Unit Owner, as the case may be, makes any alterations to the Unit after taking possession, then the warranties provided in accordance with the terms of the Offering Plan or any repairs Sponsor has agreed to make in accordance with the terms of a signed inspection statement shall be void and of no further force or effect if the alteration directly or indirectly affected or damaged the subject matter of the warranty or repair.

19. Inspection of Unit. At least one week (but not more than one month) prior to the Closing Date, at Sponsor's direction, Selling Agent if applicable or Sponsor shall notify Purchaser that the Unit is ready for inspection. Upon receipt of the notice, Purchaser shall promptly arrange an appointment with Selling Agent to inspect the Unit within the week prior to the Closing Date. Purchaser shall carefully inspect the Unit and shall complete, date, and sign the Inspection Statement (in the form set forth as Schedule A to this Agreement) and deliver same to Selling Agent if applicable or Sponsor at the conclusion of the inspection. Failure of Purchaser either to arrange such appointment or to inspect the Unit within the week prior to the Closing Date or to so sign and deliver the completed Inspection Statement shall not excuse Purchaser from paying the Balance when due and shall constitute Purchaser's full acceptance of the Unit as is. However, nothing herein shall relieve Sponsor of its obligations as set forth in "Rights and Obligations of Sponsor" in the Offering Plan.

20. Damage to the Unit. If between the date of this Agreement and the closing of title, the Unit is damaged by fire or other casualty, the following shall apply:

20.1 The risk of loss to the Unit by fire or other casualty, until the earlier of closing of title or the taking of possession of the Unit by Purchaser, is assumed by Sponsor; provided that Sponsor shall have no obligation or liability to repair or restore the Unit. The risk of loss is assumed by a Purchaser who has taken possession of the Unit prior to closing, e.g. via an Interim Lease, to

the extent that such loss is not covered by the Condominium's or Sponsor's insurance.

20.2 In the event of damage or destruction of the Unit, due to fire or other casualty, prior to the closing of title, and the election by Sponsor to repair or restore the Unit to its original condition immediately prior to the fire or other casualty, the Purchase Agreement shall continue in full force and effect, Purchaser shall not have the right to reject title or receive a credit against, or abatement in, the Purchase Price, and Sponsor shall be entitled to a reasonable period of time within which to complete the repair or restoration. Any proceeds received from insurance or in satisfaction of any claim or action in connection with such loss shall, subject to the rights of the Board of Managers and other Unit Owners if the Declaration has theretofore been recorded and any mortgagee of Sponsor, belong entirely to Sponsor and if such proceeds are paid to Purchaser, Purchaser shall promptly upon receipt thereof turn them over to Sponsor. The provisions of the preceding sentence shall survive the closing of title or the termination of the Agreement. As Sponsor has a reasonable period of time to restore a Unit after the occurrence of a casualty if it elects to do so, and the time period that would be considered reasonable will depend on the nature of the casualty, the financing commitment of a Purchaser who is dependent on financing to pay the balance of the purchase price may expire prior to the restoration of the Unit, and such Purchaser could lose their Deposit if the Purchaser is not able to extend the term of the commitment to accommodate the restoration period.

20.3 In the event of damage to or destruction of the Unit by fire or other casualty prior to the closing of title and the election by Sponsor not to repair or restore the Unit, or, if the Declaration has been recorded prior thereto, then if the Unit Owners do not resolve to make such repairs or restoration pursuant to the By-Laws, the Purchase Agreement shall be deemed cancelled and of no further force or effect and Sponsor shall return to Purchaser all sums deposited by Purchaser hereunder within thirty (30) days of making the election, together with interest, if any, earned thereon, and neither party shall have any further rights, obligations or liability to or against the other and the parties shall be released and discharged from all obligations and liability hereunder and under the Offering Plan, except that if Purchaser is then in default hereunder (beyond the applicable grace period, if any), Sponsor shall retain all such sums deposited by Purchaser hereunder and any interest earned thereon, as and for liquidated damages. Sponsor shall provide written notice to the Purchaser within sixty (60) days of the damage to the Unit whether or not Sponsor shall elect to repair or restore the Unit.

21. Prohibition Against Advertising. Purchaser hereby covenants and agrees that it shall not list the Unit for sale, resale or lease with any broker or otherwise advertise, promote, or publicize the availability of the Unit for sale, resale or lease prior to the closing of title and for one (1) year thereafter. Any such listing of the Unit or form of advertising, promotion or publicizing of the Unit by Purchaser or its agents or representatives prior to the closing of title shall be an Event of Default hereunder, entitling Sponsor to the remedies set forth in Article 12 hereof. The provisions of this Article 21 shall survive the closing of title.

22. Broker. Purchaser represents to Sponsor that _____ (collectively the "Broker") are the only broker(s) or sales agent(s) with whom Purchaser has dealt in connection with this transaction, and Sponsor agrees to pay the commission earned by the Broker pursuant to a separate agreement. Purchaser agrees that should any claim be made against Sponsor for commissions by any broker, other than the Broker, on account of any acts of Purchaser or Purchaser's representatives, Purchaser will indemnify and hold Sponsor free and harmless from

and against any and all liabilities and expenses in connection therewith, but not limited to, reasonable legal fees and disbursements. The provisions of this Article 22 shall survive the closing of title and are not made for the benefit of any third parties.

23. Agreement May Not Be Assigned.

23.1 This Agreement, or any interest of Purchaser herein, shall not inure to the benefit of any successors or assigns of Purchaser and may not be assigned by Purchaser, without the prior written consent of Sponsor, which consent may be given or denied by Sponsor in its sole discretion. Sponsor and its agents will not discriminate against any person on the basis of race, creed, color, national origin, sex, age, disability, marital status. Or other grounds prohibited by law. Any purported assignment by Purchaser in violation of this Agreement shall be an event of default by Purchaser entitling Sponsor to all remedies available at law, in equity or otherwise, including, without limitation, the remedies set forth above, and shall be voidable at the option of Sponsor.

23.2 If Purchaser is a corporation, any sale, assignment, transfer, pledge, encumbrance or other disposition of any of the stock of Purchaser, or if Purchaser is a partnership, limited liability company or other entity, any sale, assignment, transfer, pledge, encumbrance or other disposition of any interest in such partnership, limited liability company or other entity shall, for purposes of this Agreement, be considered an assignment and shall be subject to the provisions, prohibitions and terms of this Article concerning assignment of this Agreement, except that a sale of less than fifty percent (50%) of the stock, or in the case of a partnership, limited liability company or other entity, less than fifty percent (50%) of the ownership interests, of Purchaser which does not result in a change in control of Purchaser shall not be considered an assignment. For purposes of the preceding sentence only, "control" shall mean the ownership of fifty-one percent (51%) or more of the interests in such entity or possession of the power to direct the management and policies of such entity and the distribution of its profits.

23.3 If Purchaser desires to assign its rights under this Agreement or to take title in the name of an affiliate of, or entity related to, or controlled by Purchaser that differs from that reflected in this Agreement, or to add, delete or substitute the name of a member of the Purchaser's family, then, if such assignment, alteration, addition, deletion or substitution is consented to by Sponsor (in Sponsor's sole discretion), Purchaser shall deliver to Selling Agent or Sponsor's counsel, four (4) signed forms of assignment of this Agreement (to be prepared by Sponsor's counsel at Purchaser's expense and in form and content acceptable to Sponsor, in its sole discretion), as well as three (3) completed and signed copies of either Form W-9 (Request for Taxpayer Identification Number and Certification) or Form W-8BEN (Certificate of Foreign Status of Beneficial Owner for United States Tax Withholding), as applicable, in the form required by law. Upon each assignment or other change consented to by Sponsor (it its sole discretion), the assignments and Form W-8 or Form W-9, as applicable, must be delivered to Selling Agent or Sponsor's counsel, together with a personal certified check, or an official bank or cashier's check, in the amount of $1,000.00 ("Assignment Fee") made payable to Marans Weisz & Newman LLC (for services rendered in connection with the assignment), not less than twenty (20) days prior to the date scheduled for the Purchaser's closing. In no event shall Purchaser or its assignee (or any added or substituted party) have any right to adjourn or postpone the closing as a result of any such change or assignment. Sponsor is not obligated to consent to any such change or assignment and, Sponsor's refusal to consent to an assignment or change in name will not entitle Purchaser to

terminate this Agreement or excuse Purchaser from any of its obligations hereunder or give rise to any claim for damages against Sponsor; and the prohibition against advertising or publicizing the availability of Purchaser's Unit as set forth in Article 21 above and in the Offering Plan will remain in effect.

23.4 Notwithstanding the provisions of Article 23.1 above, Sponsor will not unreasonably withhold its consent to the assignment by Purchaser, on one (1) occasion only, of all of Purchaser's rights under this Agreement to a Purchaser Affiliate or to member(s) of Purchaser's Immediate Family, provided that any such assignment is made without consideration and otherwise in accordance with the provisions and procedures set forth in Article 23.3 above, including without limitation the provisions relating to the Assignment Fee. For purposes of this Article 23.4 only: (i) "Purchaser Affiliate" means an entity, as of the date of the assignment and at all times thereafter through and including the Closing, controlled by or under common control with Purchaser; (ii) "Immediate Family Members" means Purchaser's spouse, domestic partner, children, grandchildren, parents, grandparents, brothers or sisters, stepchildren and stepparents; and (iii) "control" means the ownership of fifty-one percent (51%) or more of the interests in such entity and possession of the power to direct the management and policies of such entity and the distribution of its profits.

23.5 Notwithstanding any consent by Sponsor pursuant to the terms of this Article to any such change of name or assignment, in no event shall Purchaser, as assignor, be released or relieved from any obligations, promises, covenants and liabilities under or in respect of this Agreement.

24. Binding Effect. The submission of this Agreement to Purchaser does not create a binding obligation on the part of Sponsor. This Agreement shall not be binding on Purchaser or Sponsor until Purchaser has signed this Agreement and delivered the signed Agreement and the Deposit to Sponsor, and a counterpart hereof executed by Sponsor has been delivered to Purchaser. Prior to Sponsor's countersigning and returning this Agreement to Purchaser, and at any time thereafter, Purchaser agrees upon request to provide Sponsor with written reasonable information about Purchaser's employment, financial and rental/ownership history. Such information obtained prior to countersignature may be used to determine Purchaser's qualification to purchase and own the Unit, but does not constitute a reservation or binding obligation on either the applicant or Sponsor. Sponsor's right to collect such information shall terminate upon the earlier of the closing of title to the Unit or termination of the Agreement. Sponsor has the right, without incurring any liability, to reject this Agreement without cause or explanation to Purchaser. This Agreement may not be rejected due to Purchaser's sex, sexual orientation, race, creed, color, national origin, ancestry, disability, marital status, or other grounds proscribed by law.

25. Notices.

25.1 Any notice, election, demand, consent, request or other communication hereunder or under the Offering Plan shall be in writing and either delivered in person or sent, postage prepaid, by registered or certified mail, return receipt requested or by Federal Express or other reputable overnight courier, with receipt confirmed: to Purchaser at the address given at the beginning of this Agreement with a copy to Purchaser's Attorney; and to Sponsor, at: 3714 LIC DEVELOPMENT LLC, 4918 3rd Avenue, Brooklyn, NY 11220 with a copy sent simultaneously and in like manner to Marans Weisz & Newman LLC, 29 Broadway, Suite 2400, New York, New

York 10006. Either party may hereafter designate to the other in writing a change in the address to which notices are to be sent. Notwithstanding the foregoing, any mailing of an amendment to the Offering Plan shall be delivered via regular mail. Except as otherwise expressly provided herein, a notice shall be deemed given when personal delivery or delivery by overnight courier is effected or, in the case of mailing, three (3) days after the date of mailing, except that the date of actual receipt shall be deemed to be the date of the giving of any notice of change of address.

25.2 Sponsor hereby designates and empowers both Selling Agent and Sponsor's counsel Marans Weisz & Newman LLC as Sponsor's agents to give any notice to Purchaser under this Agreement (including, without limitation, a notice of default) in Sponsor's name, which notice so given shall have the same force and effect as if given by Sponsor itself. Purchaser hereby designates Purchaser's Attorney as Purchaser's agent to give any notice to Sponsor hereunder in Purchaser's name.

26. Joint Purchasers. The term "Purchaser" shall be read as "Purchasers" if the Unit is being purchased by more than one person, in which case their obligations shall be joint and several.

27. Liability of Sponsor. Sponsor shall be excused from performing any obligation or undertaking provided for in this Agreement for so long as such performance is prevented, delayed or hindered by an act of God, fire, flood, explosion, war, riot, sabotage, inability to procure or general shortage of energy, labor, equipment, facilities, materials or supplies in the open market, failure of transportation, strike, lockout, action of labor unions, or any other cause (whether similar or dissimilar to the foregoing) not within the reasonable control of Sponsor. Sponsor's time to perform such obligation or undertaking shall be tolled for the length of the period during which such performance was excused.

28. Further Assurances. Either party shall execute, acknowledge and deliver to the other party such instruments and take such other actions, in addition to the instruments and actions specifically provided for herein, as such other party may reasonably request in order to effectuate the provisions of this Agreement or of any transaction contemplated herein or to confirm or perfect any right to be created or transferred hereunder or pursuant to any such transaction. Additionally, either party shall execute, acknowledge and deliver to the other party such instruments and take such other actions, in addition to the instruments and actions specifically provided for herein, as such other party may reasonably request in order correct any error and or omissions that may have occurred at Closing of Title. The Provisions of this Article shall survive Closing of Title and delivery of the deed.

29. Severability. If any provision of this Agreement or the Offering Plan is invalid or unenforceable as against any person or under certain circumstances, the remainder of this Agreement or the Offering Plan and the applicability of such provision to other persons or circumstances shall not be affected thereby. Each provision of this Agreement or the Offering Plan, except as otherwise herein or therein provided, shall be valid and enforced to the fullest extent permitted by law.

30. Strict Compliance. Any failure by either party hereto to insist upon the strict performance by the other party of any of the provisions of this Agreement shall not be deemed a waiver of any of the provisions hereof, and each party, notwithstanding any such failure, shall have

the right thereafter to insist upon the strict performance by the other party of any and all of the provisions of this Agreement to be performed by such other party.

31. No Lien. Neither this Agreement nor any monies deposited hereunder or expended by Purchaser in connection herewith shall constitute a lien against the Unit, any other Units, or any other portion of the Building or the Land upon which it is situated.

32. Governing Law. The provisions of this Agreement shall be governed by, and construed and enforced in accordance with, the internal laws of the State of New York applicable to contracts made and to be performed wholly in the State of New York, without regard to principles of conflicts of law.

33. Purchaser's Representations.

33.1 Purchaser represents that Purchaser has full right and authority to execute this Agreement and perform Purchaser's obligations hereunder. If Purchaser is not a natural person, Purchaser agrees to deliver at Closing, such documents evidencing Purchaser's authority as may be required by Purchaser's title company. Purchaser further represents that the Deposit represents Purchaser's own funds and that no other party (other than Purchaser or Seller, as provided herein) has any right or claim to all or any portion of the Deposit.

33.2 Purchaser is not now, nor shall it be at any time prior to or at the closing of title, an individual, corporation, partnership, joint venture, trust, trustee, limited liability company, unincorporated organization, real estate investment trust or any other form of entity (collectively, a "Person") with whom a United States citizen, entity organized under the laws of the United States or its territories or entity having its principal place of business within the United States or any of its territories (collectively, a "U.S. Person"), is prohibited from transacting business of the type contemplated by this Agreement, whether such prohibition arises under United States law, regulation, executive orders and lists published by the Office of Foreign Assets Control, Department of the Treasury ("OFAC") (including those executive orders and lists published by OFAC with respect to Persons that have been designated by executive order or by the sanction regulations of OFAC as Persons with whom U.S. Persons may not transact business or must limit their interactions to types approved by OFAC or otherwise). Neither Purchaser nor any Person who owns an interest in Purchaser is now nor shall be at any time prior to or at the closing of title a Person with whom a U.S. Person, including a "financial institution" as defined in 31 U.S.C. 5312 (a)(z), as periodically amended, is prohibited from transacting business of the type contemplated by this Agreement, whether such prohibition arises under United States law, regulation, executive orders and lists published by the OFAC or otherwise.

33.3 Purchaser has taken, and shall continue to take until the closing of title, such measures as are required by applicable law to assure that the funds used to pay to Seller the Purchase Price are derived: (i) from transactions that do not violate United States law nor, to the extent such funds originate outside the United States, do not violate the laws of the jurisdiction in which they originated; and (ii) from permissible sources under United States law and to the extent such funds originate outside the United States, under the laws of the jurisdiction in which they originated. Purchaser is, and will at closing be, in compliance with any and all applicable provisions of the USA PATRIOT Act of 2001, Pub. L. No. 107-56, the Bank Secrecy Act of 1970, as amended, 31 U.S.C. Section 5311 et. seq., the Trading with the Enemy Act, 50 U.S.C. App.

Section 1 et. seq., the International Emergency Economic Powers Act, 50 U.S.C. Section 1701 et. seq., and the sanction regulations promulgated pursuant thereto by the OFAC, as well as laws relating to prevention and detection of money laundering in 18 U.S.C. Sections 1956 and 1957.

33.4 The provisions of this Article shall survive the closing of title to the Unit or termination of this Agreement.

34. Agreement Not Contingent Upon Financing. The terms and provisions of this Agreement and Purchaser's obligations hereunder are not contingent upon Purchaser securing financing of the Purchase Price (or any portion thereof), and Purchaser understands and agrees that Purchaser's failure to obtain such financing will not relieve Purchaser of Purchaser's obligations hereunder. A Purchaser who does not obtain financing may lose the Deposit if Purchaser is unable to otherwise raise the monies for the Balance of the Purchase Price. A Purchaser who requires financing is advised to consult with a lending institution before execution of this Purchase Agreement. Sponsor makes no representation whatsoever as to the terms, cost, or availability of any mortgage or other financing. Purchaser further understands and agrees that if Purchaser chooses to finance Purchaser's purchase of the Unit through a lending institution and obtain a commitment therefrom, neither a subsequent change in the terms of such commitment, the expiration or other termination of such commitment, nor any change in Purchaser's financial status or condition shall release or relieve Purchaser of Purchaser's obligations pursuant to this Agreement.

35. Costs of Enforcing and Defending Agreement. If Sponsor prevails, Purchaser shall be obligated to reimburse Sponsor for any reasonable legal fees and disbursements incurred by Sponsor, as determined by a court of law, in successfully defending Sponsor's rights under the Purchase Agreement or, in the event Purchaser defaults under the Purchase Agreement, in canceling the Purchase Agreement or otherwise enforcing Purchaser's obligations thereunder. If Purchaser prevails, Purchaser will not be reimbursed for any legal fees or disbursements incurred by Purchaser in successfully defending Purchaser's rights under the Purchase Agreement or otherwise enforcing Sponsor's obligations thereunder. The provisions of this Article shall survive closing of title or the termination of this Agreement.

36. Waiver of Jury Trial. Except as prohibited by law, the parties shall, and they hereby do, expressly waive trial by jury in any litigation arising out of, connected with, or relating to this Agreement or the relationship created hereby or in the Offering Plan. With respect to any matter for which a jury trial cannot be waived, the parties agree not to assert any such claim as a counterclaim in, nor move to consolidate such claim with, any action or proceeding in which a jury trial is waived. Any lawsuit arising out of the Purchase Agreement shall be governed by the laws of the State of New York and shall be brought in the county in which the Building is located. The provisions of this Article shall survive closing of title or the termination of this Agreement.

37. Waiver of Diplomatic or Sovereign Immunity.

37.1. Purchaser hereby waives any and all immunity from suit or other actions or proceedings and agrees that, should Sponsor or any of its successors or assigns bring any suit, action or proceeding in New York or any other jurisdiction to enforce any obligation or liability of Purchaser arising, directly or indirectly, out of or relating to this Agreement, no immunity from such suit, action or proceeding will be claimed by or on behalf of Purchaser.

37.2. As of the execution of this Agreement, Purchaser acknowledges and agrees that all disputes arising, directly or indirectly, out of or relating to this Agreement may be dealt with and adjudicated in the state courts of New York or the federal courts sitting in New York, and hereby expressly and irrevocably submits the person of Purchaser to the jurisdiction of such courts in any suit, action or proceeding arising, directly or indirectly, out of or relating to this Agreement. So far as is permitted under the applicable law, this consent to personal jurisdiction shall be self-operative and no further instrument or action shall be necessary in order to confer jurisdiction upon the person of Purchaser in any such court.

37.3. Purchaser irrevocably waives, to the fullest extent permitted by law, and agrees not to assert, by way of motion, as a defense or otherwise in any suit, action or proceeding arising, directly or indirectly, out of relating to this Agreement, brought in the state courts in New York, or the federal courts sitting in New York: (i) any objection which it may have or may hereafter have to the laying of the venue of any such suit, action or proceeding in any such court; (ii) any claim that any such suit, action or proceeding brought in any such court has been brought in an inconvenient forum; or (iii) any claim that it is not personally subject to the jurisdiction of such courts. Purchaser agrees that final judgment from which Purchaser has not or may not appeal or further appeal in any such suit, action or proceeding brought in such a court shall be conclusive and binding upon Purchaser and, may so far as is permitted under the applicable law, be enforced in the courts of any state or any federal court and in any other courts to the jurisdiction of which Purchaser is subject, by a suit upon such judgment and that Purchaser will not assert any defense, counterclaim, or set off in any such suit upon such judgment.

37.4. Purchaser agrees to execute, deliver and file all such further instruments as may be necessary under the laws of the State of New York, in order to make effective the consent of Purchaser to jurisdiction of the state courts of New York and the federal courts sitting in New York and any other provisions of this Article 37.

37.5. Nothing in this Article 37 shall affect the right of Sponsor to bring proceedings against Purchaser in the courts of any jurisdiction or jurisdictions.

37.6. The provisions of this Article 37 shall survive the closing of title or the termination of this Agreement for the purpose of any suit, action, or proceeding arising directly or indirectly, out of or relating to this Agreement.

37.7. In the event Purchaser is a foreign government, a resident representative of a foreign government or such other person or entity otherwise entitled to the immunities from suit enjoyed by a foreign government (i.e., diplomatic or sovereign immunity), such Purchaser hereby designates a duly authorized and lawful agent to receive process for and on behalf of the Purchaser in any state or federal suit, action or proceeding in the State of New York based on, arising out of or connected with this Agreement.

37.8 If Purchaser is a foreign mission, as such term is defined under the Foreign Missions Act, 22 U.S.C. 4303, Purchaser shall notify the United States Department of State prior to purchasing a Unit and provide a copy of such notice to Sponsor. Sponsor shall not be bound under this Agreement unless and until the earlier to occur of: (i) a notification of approval is received from the Department of State; or (ii) sixty (60) days after Purchaser's notice is received by the Department of State.

38. Mold. There is no known mold growth at the Property. Purchasers are advised that the prevention of the growth of mold in a Unit is the responsibility of each Unit Owner. Construction is not, and cannot be, designed to exclude mold spores. Whether a Unit Owner experiences mold growth depends largely on how such Unit Owner manages and maintains their Unit. Unit Owners will need to take actions to prevent conditions which cause the mold or mildew, and it is the responsibility of each Unit Owner to ensure that they take the necessary precautions to prevent mold from becoming a problem in such Unit Owner's Unit. Unless the existence of mold occurs within one (1) month or earlier of Closing (unless there is a latent defect due to faulty construction by Sponsor so that mold could not be discovered within one (1) month of Closing), and is caused by faulty construction by Sponsor, Sponsor will not be liable to Purchaser with respect to the presence and/or existence of molds, mildew and/or microscopic spores. This provision shall survive closing of title.

39. No Representations. Purchaser acknowledges that Purchaser has not relied upon any sales plans, selling brochures, advertisements, representations, warranties, statements or estimates of any nature whatsoever, whether written or oral, made by Sponsor, Selling Agent or otherwise, including, but not limited to, any relating to the description or physical condition of the Property, the Building or the Unit, or the size or the dimensions of the Unit or the rooms therein contained or any other physical characteristics thereof, the services to be provided to Unit Owners, the estimated Common Charges allocable to the Unit, the estimated real estate taxes of the Unit, the ability to rent the Unit and/or the rental income therefore, the right to any income tax deduction for any real estate taxes or mortgage interest paid by Purchaser, or any other data, except as herein or in the Offering Plan specifically represented; as such, Purchasers are urged to ensure material representations are incorporated into the negotiated Purchase Agreement. Purchaser acknowledges it has relied solely on their own judgment and investigation in deciding to enter into this Agreement and purchase the Unit. No person has been authorized to make any representations on behalf of Sponsor. No oral representations or statements shall be considered a part of this Agreement. Purchaser shall not be relieved of any of Purchaser's obligations hereunder, and Purchaser agrees to purchase the Unit, without offset or any claim against, or liability of, Sponsor, by reason of any immaterial inaccuracy or error, including but not limited to immaterial inaccuracy or error in the layout or dimension of the Unit or any part thereof, or of the Common Elements, except as provided under applicable law or as set forth in the Offering Plan. A decrease in a unit's area of 5% or less will not affect a Purchaser's obligations unless such decrease is determined to be a material change. There is a rebuttable presumption that an area that is diminished by 5% or less is not material. Notwithstanding the foregoing, representations that are inconsistent with the Offering Plan or the Purchase Agreement will not affect Sponsor's liability under the Martin Act. The provisions of this paragraph shall survive the closing of title or the termination of this Agreement.

40. Certain References. A reference in this Agreement to any one gender, masculine, feminine or neuter, includes the other two, and the singular includes the plural, and vice versa, unless the context otherwise requires. The term "herein," "hereof" or "hereunder," or similar terms used in this Agreement, refer to this entire Agreement and not to the particular provision in which the term is used. Unless otherwise stated, all references herein to Articles, Sections or other provisions are references to Articles, Sections or other provisions of this Agreement.

41. Captions. The captions in this Agreement are for convenience and reference only and in no way define, limit or describe the scope of this Agreement or the intent of any provision hereof.

42. Successors and Assigns. Subject to the provisions of Article 23 hereof, the provisions of this Agreement shall bind and inure to the benefit of Purchaser and Purchaser's heirs, legal representatives, successors and permitted assigns and shall bind and inure to the benefit of Sponsor and its successors and assigns.

43. No Oral Changes. This Agreement or any provision hereof, cannot be orally changed, terminated or waived. ANY CHANGES OR ADDITIONAL PROVISIONS MUST BE SET FORTH IN A RIDER ATTACHED HERETO OR IN A SEPARATE WRITTEN AGREEMENT SIGNED BY THE PARTIES AND WHICH REFERS TO THIS AGREEMENT.

44. Counterparts. This Agreement (or any such Rider(s)) may be executed in any number of counterparts, including but not limited to any signature conveyed through electronic mail transmission ("PDF") and/ or facsimile transmission, any one of which shall be deemed to be an original and all of which shall constitute one and the same document. When counterparts have been executed by all parties, they shall have the same effect as if the signatures to each counterpart were upon the same documents and shall be deemed valid as originals. A PDF or facsimile signature on this Agreement (or any such Rider(s)) shall be acceptable and be deemed binding.

45. Rule of Construction. There shall be no presumption against the drafter of this Agreement or the Offering Plan.

46. Smoking Policy. Smoking and using electronic cigarettes is prohibited at all times in all enclosed common areas of the Building, as required by law. Enclosed common areas of the Building include, but is not limited to, indoor Common Elements such as a lobby, hallway, and stairway. Smoking and using electronic cigarettes is permitted at all times in all dwelling units and outdoor areas, unless otherwise restricted by law. This policy applies to any person on the premises. Complaints about violations shall be made promptly to the Board of Managers. Complaints should be made in writing and should be as specific as possible, including the date, approximate time, location where smoke was observed, description of incident, and apparent source of smoke. Unit Owners shall provide to prospective buyers or renters of their Units a copy of this Smoking Policy including by annexing it to any contract of sale or lease of their Unit.

<Signature Page Follows>

IN WITNESS WHEREOF, the parties have executed this Agreement as of the date first set forth hereinabove.

SPONSOR:

3714 LIC DEVELOPMENT LLC

By: _____
Name:
Title:

PURCHASER:

By: _____

By: _____

WITH RESPECT TO PARAGRAPH 4:

ESCROW AGENT:

By: _____

SCHEDULE A

INSPECTION STATEMENT

3714 LIC DEVELOPMENT LLC
4918 3rd Avenue
Brooklyn, NY 11220

Re: Unit No.
The 37-14 34th Street Condominium

Gentlemen:

As a result of my/our final inspection, please be advised that except as otherwise noted, I/we found all items in good condition, free of chips, mars, breaks or other defects:

Exceptions

I/we understand that to prevent pilferage, certain items such as medicine cabinet doors, shower heads, toilet seats, kitchen cabinets, vanity knobs and mechanical chimes will be installed just prior to my/our date of moving. I/we agree and I/we will sign off each item requiring adjustment or repairs as it is completed.

_____
Purchaser's Signature

_____
Sponsor's Representative

FORM OF POWER OF ATTORNEY

The undersigned, _____, the Owner of Unit ____ in the building complex known as The 37-14 34th Street Condominium, 37-14 34th Street, Long Island City, NY 11101 as designated and described in the Declaration establishing The 37-14 34th Street Condominium, dated _____, 20___ and recorded in the Office of the City Register of the City of New York on _____20___, in CRFN# _____ on the floor plans filed in the Real Property Assessment Department of the City of New York as Condominium Plan No. _____ (the "Condominium") do hereby irrevocably nominate, constitute and appoint the Board of Managers of the Condominium, and their successors, jointly, true and lawful attorneys-in-fact of the undersigned, with a power coupled with an interest, with power of substitution (1) to acquire, in their own names as members of the Board of Managers or in the name of their designee, corporate or otherwise by deed, on behalf of all owners of Condominium Units in said Condominium property, in accordance with their respective Common Interests, (a) any Unit whose owner desires to sell the same, the undivided interest in the Common Elements appurtenant thereto, the interest of such Unit theretofore acquired by the Board of Managers, or its designee, on behalf of all Unit Owners, or in the proceeds of sale or lease thereof, if any, and the interest of such Unit Owner in all other assets of the Condominium (hereinafter collectively called the "Appurtenant Interests"), or (b) any Unit which shall be the subject of a foreclosure or other judicial sale or whose owner desires to surrender or abandon same in accordance with the By-Laws, or (2) to lease any Unit whose Owner desires to rent the same, at such prices or at such rental, as the case may be, and on such other terms, and conditions as said attorneys-in-fact shall, in their sole discretion deem proper, and (3) thereafter to convey, sell, lease, sublease, mortgage, vote, or otherwise deal with any such Unit so acquired by them, on such terms and conditions as said attorneys-in-fact in their sole discretion determine, granting to said attorneys-in-fact the power to do all things in the said premises which the undersigned could do if the undersigned were personally present, and (4) to execute, acknowledge and deliver (a) any declaration or other instrument affecting the Condominium which the Board of Managers of the Condominium deems necessary or appropriate to comply with the Declaration of Condominium, or any law, ordinance or regulation, zoning resolution or requirement of the Department of Buildings, the City Planning Commission, the Board of Standards and Appeals or any other public authority, applicable to maintenance, demolition, construction, alteration, repair or restoration of the Condominium or (b) any consent, covenant, restriction, easement or declaration or any amendment thereto affecting the Condominium or the Common Elements that the Board of Managers deems necessary or appropriate, provided such change is consistent with the Condominium Act.

The acts of a majority of such persons shall constitute the acts of said attorneys-in-fact.

[Signature page follows]

IN WITNESS WHEREOF, the undersigned have executed this Power of Attorney as of the ___ day of _____, 20___.

_____

_____

STATE OF NEW YORK)
) ss.:
COUNTY OF _____)

On the ____ day of _____ in the year 20___ before me, the undersigned _____, personally appeared personally known to me or proved to me on the basis of satisfactory evidence to be the individual(s) whose name(s) is (are) subscribed to the within instrument and acknowledged to me that they executed the same in their capacit(ies), and that by their signature(s) on the instrument, the individual(s), or the person upon behalf of which the individual(s) acted, executed the instrument.

_____
(Notary)

STATE OF NEW YORK)
) ss.:
COUNTY OF _____)

On the ____ day of _____ in the year 20___ before me, the undersigned _____, personally appeared personally known to me or proved to me on the basis of satisfactory evidence to be the individual(s) whose name(s) is (are) subscribed to the within instrument and acknowledged to me that they executed the same in their capacit(ies), and that by their signature(s) on the instrument, the individual(s), or the person upon behalf of which the individual(s) acted, executed the instrument.

_____
(Notary)

FORM OF UNIT DEED

THIS INDENTURE, made as of the ____ day of _____, 20___, between 3714 LIC DEVELOPMENT LLC, a New York limited liability company, having an office at 4918 3rd Avenue, Brooklyn, NY 11220 (hereinafter referred to as the "Grantor"), and _____, having an address_____ (hereinafter referred to as the "Grantee").

W I T N E S S ET H:

That the Grantor, in consideration of Ten ($10.00) Dollars and other good and valuable consideration paid by the Grantee, does hereby grant and release unto the Grantee, and the heirs or successors and assigns of the Grantee, forever:

The Condominium Unit known as Unit No. ___ together with a _____% undivided interest in the common elements of The 37-14 34th Street Condominium, also known by the street number 37-14 34th Street, County of Queens, City and State of New York, said Unit being designated and described by the above unit number in the Declaration establishing a plan for Condominium ownership of the Condominium property under the Condominium Act of the State of New York, as amended (Article 9-B of the Real Property Law of the State of New York) dated _____ and recorded in the Office of the City Register of the City of New York on _____ under CRFN _____, (such declaration and any amendments thereto being referred to hereinafter, collectively, as the "Declaration"). The land on which the building containing the Unit is located is bounded and described as on schedule "A" annexed hereto, said Unit also being designated as Tax Lot _____ in Block 375 on the Tax Map of the Real Property Assessment Department of the City of New York for the Borough of Queens and on the floor plans of the Building (the "Floor Plans"), certified by _____, on the _____ day of _____, 20___, and filed in with the Real Property Assessment Department of the City of New York on the _____ day of _____, 20___, as Condominium Plan No. _____ and also filed in the Office of the City Register of the City of New York as Condominium Map No. _____ under CRFN _____.

Together with an undivided _____% interest in the Common Elements (as such term is defined in the Declaration);

Together with, and subject to, the rights, obligations, easements, restrictions and other provisions set forth in the Declaration and the By-Laws of The 37-14 34th Street Condominium, as the same may be amended from time to time (hereinafter referred to as the "By-Laws"), all of which shall constitute covenants running with the Land and shall bind the person having at any time any interest or estate in the Unit, as though recited and stipulated at length herein;

Subject also to such other liens, agreements, covenants, easements, restrictions, consents and other matters of record as pertain to the Unit, to the Land and/or to the Building (which Land

and Building are hereinafter collectively referred to as the "Property");

To have and to hold the same unto the Grantee, and the heirs or successors and assigns of the Grantee, forever.

If any provision of the Declaration or the By-Laws is invalid under, or would cause the Declaration or the By-Laws to be insufficient to submit the Property to the provisions of the Condominium Act, or if any provision that is necessary to cause the Declaration and the By-Laws to be sufficient to submit the Property to the provisions of the Condominium Act is missing from the Declaration or the By-Laws, or if the Declaration and the By-Laws are insufficient to submit the Property to the provisions of the Condominium Act, the applicable provisions of Article 16 of the Declaration shall control.

Except as otherwise specifically permitted by the Condominium's Board of Managers (as such term is defined in the Declaration) a _____Unit is intended for _____ purposes only.

The Grantor covenants that the Grantor has not done or suffered anything whereby the Unit has been encumbered in any way whatever, except as set forth in the Declaration and the By-Laws (any Rules and Regulations adopted under the By-Laws).

The Grantor, in compliance with Section 13 of the Lien Law of the State of New York, covenants that the Grantor will receive the consideration for this conveyance and will hold the right to receive such consideration as a trust fund for the purpose of paying the cost of the improvements at the Property and will apply the same first to the payment of the cost of such improvements before using any part of the same for any other purposes.

The Grantee accepts and ratifies the provisions of the Declaration and the By-Laws (and any Rules and Regulations adopted under the By-Laws) and agrees to comply with all the terms and provisions thereof.

This conveyance is made in the regular course of business actually conducted by the Grantor.

The term "Grantee" shall be read as "Grantees" whenever the sense of this indenture so requires.

[Signature page follows]

IN WITNESS WHEREOF, the Grantor and the Grantee have duly executed this indenture as of the day and year first above written.

Grantor:

3714 LIC DEVELOPMENT LLC

By: _____
Name:
Title:

Grantee:

_____
(Print Name)

STATE OF NEW YORK)
)ss.:
COUNTY OF _____)

On the ____ day of _____ in the year 20__ before me, the undersigned _____, personally appeared personally known to me or proved to me on the basis of satisfactory evidence to be the individual(s) whose name(s) is (are) subscribed to the within instrument and acknowledged to me that they executed the same in their capacity(ies), and that by their signature(s) on the instrument, the individual(s), or the person upon behalf of which the individual(s) acted, executed the instrument.

_____
(Notary Public)

STATE OF NEW YORK)
)ss.:
COUNTY OF _____)

On the ____ day of _____ in the year 20__ before me, the undersigned _____, personally appeared personally known to me or proved to me on the basis of satisfactory evidence to be the individual(s) whose name(s) is (are) subscribed to the within instrument and acknowledged to me that they executed the same in their capacity(ies), and that by their signature(s) on the instrument, the individual(s), or the person upon behalf of which the individual(s) acted, executed the instrument.

_____
(Notary Public)

SCHEDULE A

PROPERTY DESCRIPTION

FORM OF INTERIM LEASE AGREEMENT

AGREEMENT made this ___ day of _____, between 3714 LIC DEVELOPMENT LLC, having an office 4918 3rd Avenue, Brooklyn, NY 11220 (hereinafter Sponsor) and _____ whose address is 37-14 34th Street, Unit # ____, Long Island City, NY 11101 (hereinafter Purchaser),

WITNESSETH,

WHEREAS, Sponsor is the Sponsor of a condominium conversion of premises located at 37-14 34th Street, Long Island City, NY 11101 and;

WHEREAS, Purchaser has executed a Purchase Agreement for Unit ___ (the "Apartment") at said premises, and;

WHEREAS, Purchaser wishes to occupy said Apartment prior to the closing of title;

NOW, THEREFORE, in conformity with the terms and conditions of the Offering Plan filed with the Attorney General of the State of New York, the parties agree as follows:

1) Commencing on _____, 20___, and terminating as hereinafter specified, PURCHASER shall have the right to use and occupy the aforementioned Apartment.

2) After a free three week grace period, Purchaser shall pay a fee for use and occupancy of the Apartment of $_____ per month. It is understood that this use and occupancy fee is not rent, and that no landlord-tenant relationship has been created between the parties, and that this Agreement is not governed or subject to any rent regulatory laws. Purchaser has deposited with Sponsor, and Sponsor recognizes that Purchaser has deposited the sum of $_____ representing a deposit under the Purchase Agreement. Purchaser's deposit of $_____ shall be applied against the purchase price of the Unit at closing and is subject to forfeiture by Purchaser in event of their default under the Purchase Agreement. In the event of Purchaser's default under the terms of the Interim Lease, Sponsor may direct the Escrow Agent to pay any use and occupancy fees due by Purchaser from such deposit.

3) The use and occupancy fee for the month in which closing occurs shall be adjusted at closing. No portion of the use and occupancy fee will be applied to the purchase price of the apartment. Any unapplied use and occupancy fee shall be refundable to Purchaser at closing.

4) The terms of the Offering Plan and all related documents in effect as of the date hereof are incorporated in and made a part of this Agreement. To the extent that there are any inconsistencies between this Agreement and the Offering Plan, the provisions of the Offering Plan shall control.

5) As of the date of this Agreement, risk of loss to the Apartment and its contents by fire of other hazard shall be determined pursuant to the terms of the Purchase Agreement for such Apartment, as contained in the Offering Plan for the premises in effect as of the date hereof, as if Purchaser were the owner of such Apartment.

6) Purchaser shall pay all utility costs and make any repairs to the apartment for which he would be obligated as owner subject to the terms and provisions of Paragraph 12. Sponsor will not be responsible for ordinary wear and tear to the Apartment during the Purchaser's occupancy.

7) Purchaser may not make any alterations to the Apartment without Sponsor's written consent.

8) This lease will terminate on the happening of the earliest of the following:

a. Closing
b. Rescission ("Rescission") of the Purchase Agreement by Purchaser under the Offering Plan
c. Default by Purchaser

9) Upon an uncured default by Purchaser under the terms of the Interim Lease which is not cured within 30 days after notice thereof, or immediately after Purchaser exercises any right of rescission with respect to the Purchase Agreement, Purchaser's right to occupy the apartment will terminate, and Purchaser must vacate the Apartment. Purchaser shall pay to Sponsor $500.00 per day for each day Purchaser remains in possession following the periods set forth above; this amount will be due in addition to any liquidated damages due pursuant to the Purchase Agreement and will not be released from escrowed funds. Nothing contained herein shall be construed so as to limit Sponsor's ability to have Purchaser evicted from the premises and to pursue any other legal remedy available to Sponsor, nor shall anything herein be construed as a waiver by the Sponsor of their right to retain, as liquidated damages, the Deposit deposited upon execution of the Purchase Agreement.

10) Sponsor may utilize a default under the Interim Lease to declare a default under the Purchase Agreement, however, Sponsor must first either obtain an order of eviction or other judgment or order from a court or agency of competent jurisdiction against the Purchaser, unless the Purchaser has vacated the unit. Nevertheless, Sponsor may utilize a default under the Purchase Agreement to declare a default under the Interim Lease without a judgment or order from a court or agency of competent jurisdiction against the Purchaser and then commence eviction proceedings. Any such default will terminate Purchaser's right to use and occupy, and will also terminate Purchaser's right to purchase the Apartment, and shall result in loss of the Deposit.

11) This Agreement may not be assigned, and may not be changed, except by signed, written instrument. This Agreement is the entire agreement between the parties as regards use and occupancy of the Apartment pending closing.

12) As of the date hereof, Purchaser confirms that all work required to be done in or about the subject apartment has been completed, that the condition of title as set forth in the Purchaser's title report is acceptable, and that in all respects Purchaser agrees to accept the Apartment in "as is" condition except for the aforementioned items. As of the date hereof, Purchaser waives any right whatsoever to cancel the Purchase Agreement, except for a material change in the Offering Plan.

13) Failure to appear for closing within 30 days after delivery to Purchaser of notice by fax or mail that Sponsor is prepared to close shall be deemed a default both in this Occupancy Agreement and in the Purchase Agreement entitling Sponsor to cancel the Purchase Agreement, retain all sums

previously paid and remove Purchaser from the subject apartment, and collect the increased use and occupancy fee set forth in Clause 9 above.

14) Purchaser agrees that as a term of this Occupancy Agreement to pay a lease preparation fee in the amount of $1,000.00 to Sponsor's attorney.

15) Any Interim Lease shall be subordinate to the mortgage held by the Lender. Any Interim Lease shall be deemed invalid and of no force and effect without the prior written consent of the Lender. Every occupant of the Unit shall be required to execute the Interim Lease.

16) Smoking and using electronic cigarettes is prohibited at all times in all enclosed common areas of the Building, as required by law. Enclosed common areas of the Building include, but is not limited to, indoor Common Elements such as a lobby, hallway, and stairway. Smoking and using electronic cigarettes is permitted at all times in all dwelling units and outdoor areas, unless otherwise restricted by law. This policy applies to any person on the premises. Complaints about violations shall be made promptly to the Board of Managers. Complaints should be made in writing and should be as specific as possible, including the date, approximate time, location where smoke was observed, description of incident, and apparent source of smoke. Unit Owners shall provide to prospective buyers or renters of their Units a copy of this Smoking Policy including by annexing it to any contract of sale or lease of their Unit.

IN WITNESS WHEREOF, the parties hereunto set their hands this ____ day of _____, 20___.

SPONSOR:

3714 LIC DEVELOPMENT LLC

By:_____

PURCHASER:

_____

TAX ESCROW AGREEMENT

AGREEMENT made this ____ day of _____, 20__ by and among 3714 LIC DEVELOPMENT LLC (hereinafter referred to as "Sponsor"), the Board of Managers of The 37-14 34th Street Condominium (hereinafter referred to as "Board of Managers") and _____, (hereinafter referred to as "Purchaser")

W I T N E S S E T H:

WHEREAS, Sponsor is the Sponsor of The 37-14 34th Street Condominium located at 37-14 34th Street, Long Island City, NY 11101; and,

WHEREAS, the Board of Managers is charged with governing the operation of said Condominium; and,

WHEREAS, as of the date hereof, Sponsor controls the Board of Managers; and

WHEREAS, the Purchaser is acquiring title to Unit ___ (the "Unit") on the date hereof; and,

WHEREAS, the individual Condominium Units located at the aforementioned property have not been separately assessed for real estate tax purposes prior to the closing of the first Unit located thereat; and,

WHEREAS, the Board of Managers desires to secure the Purchaser's obligation to pay Purchaser's proportionate share of the taxes due for the Unit for the _____ of the _____ tax year in the event that property has not been separately assessed by _____; and,

NOW, THEREFORE, the parties agree as follows:

1. At closing, the Purchaser shall escrow funds with the Sponsor for Purchaser's proportionate share, based on the Unit's percentage of Common Interest, of the Sponsor's real estate tax obligation for the _____ of the _____ tax year (the "Tax Obligation") in the amount of $_____.

2. The Board of Managers is irrevocably authorized to pay, and hereby agrees to so pay, Purchaser's proportionate share of such real estate taxes as are assessed against the premises from the escrow account when such taxes are due and payable.

3. In the event that the Purchaser's escrow of the Tax Obligation shall be insufficient to meet the Purchaser's proportionate share of the actual assessed real estate taxes, the Board of Managers shall assess the Purchaser for such shortfall. Purchaser hereby agrees to pay such assessment in accordance with the terms of the Declaration and By-Laws but in no event later then the due date for such real estate tax payment.

4. Upon each subsequent closing of the remaining Units, the Sponsor shall collect the estimated amount of taxes attributable to such Unit for the _____ of the _____ tax year from the purchaser thereof.

5. The escrow shall be kept in a non-interest bearing account.

6. The escrow account shall be maintained in accord with all laws, rules, and regulations of the State of New York, specifically including, but not limited to, the General Business Law; and, shall be deemed held for the benefit of the condominium.

7. In the event that any sum paid to the Board of Managers hereunder shall not be paid toward real estate taxes for any reason, such sum shall be reimbursed to the Purchaser or Sponsor who advanced same.

8. Purchaser shall be entitled to receive any retroactive credit for real estate taxes actually paid by Purchaser (either directly or via payment from the escrow account) from the date of closing until the individual tax lot for the Unit is separately assessed which credit is properly allocated to the Unit. In the event that such retroactive credit is given to the Sponsor, Sponsor shall promptly reimburse the Purchaser in the amount of said credit.

9. Sponsor shall be entitled to receive any retroactive credit for real estate taxes actually paid by Sponsor for any period prior to closing which credit is properly allocated to the Unit. In the event that such retroactive credit is given to the Purchaser, Purchaser shall promptly reimburse the Sponsor in the amount of said credit.

10. In the event that the individual Condominium Units have not been separately assessed for real estate tax purposes on or before _____, the Board of Managers will collect an additional escrow from each Unit Owner for the Unit Owner's proportionate share of the amount determined by the Board of Managers to be sufficient to pay the outstanding real estate taxes. In such event the Board of Managers shall be authorized to pay all outstanding real estate taxes directly to the New York City Department of Finance.

11. The Unit Owner indicated below has executed this Agreement for the purpose of consenting to the terms hereof and to agree to advance to the Board of Managers any sums that represent the proportionate share of real estate taxes for their Unit until the time when the City of New York actually apportions the tax lots for the individual condominium units.

12. This Agreement may be signed in counterparts and facsimile or other electronic copies of signatures shall be deemed originals for purposes of this Agreement.

[Signature page follows]

IN WITNESS WHEREOF, the parties set their hands the date above first written.

3714 LIC DEVELOPMENT LLC
SPONSOR

By: _____
Name:
Title:

3714 LIC DEVELOPMENT LLC
SPONSOR

FOR THE BOARD OF MANAGERS OF
THE 37-14 34TH STREET CONDOMINIUM

By: _____
Name:
Title:

CONSENT:

_____
Purchaser

Anthony Morali R.A.
Morali Architect
505 8th avenue New York, NY 10018

37-14 34th Street
Long Island City, NY 11101

BLOCK: 375
LOT: 24
ZONE: M1-2/R6A Long Island City Special District/Dutch Kills Sub-district
YEAR BUILT:

Certificate of Occupancy: None Available

Occupancy Classification: R2 – Residential Apartment Houses

The New building shall be constructed following the 2014 NYCBC. Work filed and approved by NYC Department of Buildings under NB Application #421097413, and is still under construction.

New York City's Façade Inspection Safety Program ("FISP"), also known as Local Law 11/98 applies to this building.

The sponsor has stated that to the extent required by law inspection certificates shall be provided.

There are no single rooms. There are commercial stores.

THE LIABILITY OF THE UNDERSIGNED IS STRICTLY LIMITED TO COMPLIANCE WITH THE PROVISION OF ARTICLE 23A OF THE GENERAL BUSINESS LAW AND THE REGULATIONS OF THE DEPARTMENT OF LAW PURSUANT THERETO.

NO OBLIGATION OR LIABILITY IS ASSUMED FOR DEFECTS, ERRORS, VARIATIONS OR CHANGES MADE IN THE CONSTRUCTION OF THE BUILDING. MY PARTICIPATION IN THE PROJECT IS LIMITED TO THE PREPARATION OF THE BUILDING PLANS AND THE PREPARATION OF THIS REPORT.

I HAVE NO CONTROL WHETHER OR NOT THE FINISHES, MATERIAL OR EQUIPMENT MENTIONED IN THIS REPORT ARE FURNISHED OR INSTALLED AS DESCRIBED. IT IS SUGGESTED THAT EACH PURCHASER MAKE HIS OR HER INSPECTION PRIOR TO CLOSING. I AM NOT ENGAGED IN THE SUPERVISION OF THE CONSTRUCTION OF THIS BUILDING.

Date: October 28th, 2019
By: Anthony Morali

(a) LOCATION AND USE OF PROPERTY

This property and proposed use will comply with all zoning and use requirements at closing.

(1) Address: 37-14 34th Street Long Island City, NY 11101

(2) Block: 375 Lot: 24

(3) Zoning: M1-2/R6A Long Island City Special District/Dutch Kills Sub-district

(4) Permissible Use:

Residential	1 & 2 (R2 Residential Apartment Houses/Class A Multiple Dwelling)
Community Facilities	3 & 4
Commercial	5 & 6 (U.G. 16A-16D or 10A as modified by Z.R. 117-62)

(5) Handicapped Access:
This project is designed within the requirements of all applicable federal, state and local laws and regulations governing accessibility to the disabled.

(6) The project is in New York City and is a Quality Housing project, and is in full compliance with the N.Y.C. Building Requirements for Quality Housing. Quality housing Building interior component is considered in providing Refuse Storage and Disposal Room on each Residential floors, facilitating Laundry equipment in all Residential units, and providing windows for daylight in corridors. The recreation and planting component is considered in providing Indoor and Outdoor Recreation space which totals more than 3.3% of Residential floor area. The safety and security component is considered in facilitate less number of Residential units than the minimum required density of dwelling units per corridor. The parking component is considered in providing Accessory parking garage in Cellar, screened from the public realm.

(b) STATUS OF CONSTRUCTION

(1) Year built:
Under Construction. The plans and specifications have been filed with the New York City Department of Buildings and have been approved. The construction of building commenced on September 5th, 2018, and it is scheduled to be substantially completed on or about the 4th quarter of 2020.

(2) Class of Construction:
Class “A” Multiple Dwelling
NYC Construction Classification: I-B / 2 Hour / Non-Combustible Construction Project is built under 2014 NYC Building code and NYC Quality Housing requirements and is in compliance therewith.

(3) Certificate of Occupancy:

A Temporary Certificate of Occupancy will be issued prior to initial occupancy.

(4) Permits and Description:
   a. New Building – permit No. 421097413-01-NB, first issued 08/17/2018
   b. Construction Fence – Permit No. 421070762-EQ-FN, first issued 08/07/2018
   c. Plumbing – Permit No. 421097413-04-PL, first issued 01/31/2019

(c) SITE

(1) Size: 195.21' x 100' lot, approximately 19,500 square feet

(2) Number of Buildings and Use :
One base building at Cellar thru 1st Floor will be built, and 2 buildings(North Residential Tower and South Residential Tower) of 6 Residential floors(2nd thru 7th floor) each with Roof and Roof Bulkhead will be built on top of the base building. Cellar will contain Parking for 43 cars, Electric, Water and Gas meter rooms, Compactor rooms, Storage rooms and Laundry Room. 1st floor is consisted of Residential Lobbies and one(1) Commercial Space. 2nd thru 7th floor will be occupied with seventy seven(77) Residential Apartments. Roof contains Recreation Space, Mechanical Equipments Rooms and Stair Bulkhead. Roof Bulkhead contains Elevator Control Room.

(3) Streets owned or maintained by the project:
The Building is abutted by 33rd Street to the North-West, 34th Street to the South-East. The main residential entry to the Building is on Pedestrian walkway connecting-through 33rd and 34th Street at North of the sit. Pedestrian walkway owned by project will be paved with precast concrete paver over 1 1/2" bituminous setting bed and shall be lighted with dark sky compliant, see section (q) for specification. Four(4) Area drains will be provided per DOB approved plumbing drawing, see section (j)7 for specification. 33rd and 34th Street are public streets owned and maintained by the City of New York. The existing streets are standard NYC DOT streets paved with bituminous topping which are in good condition. The existing curbing is steel faced curb and is in good condition. The streets are constructed with a crown in the middle of the street which provides cross drainage to gutters on each side of the street. Those gutters are pitched to catch basins located near the street intersections. The street lighting is provided and maintained by the City of New York. All items are in conformity with local fire district, and municipal building codes.

(4) Drives, sidewalks and ramps:
The sidewalk adjacent to the property will be replaced with new concrete sidewalks. The sidewalks will be constructed to allow for drainage away from the building toward the street curb and gutter. See C.3. above.

(d) UTILITIES

(1) Natural gas service will be provided by National Grid. Natural gas service will share a common gas meter for the building for all residential units for cooking purposes. Residential unit domestic hot water heaters have a separate meter. Residential Unit makeup air units have a separate meter. A separate gas meter and hookup will be provided for the commercial unit in the event use of the space requires gas service in the future.

(2) Domestic water will be supplied by the City of New York. Domestic water distribution system is obligated to the condominium owners in common. The building has one domestic water meter for the entire building.

(3) Electric service will be provided by Consolidated Edison Company of New York and will be individually metered to each condominium unit.

(4) Telephone service Telephone service will be provided on an individual basis to each unit by Verizon. Each unit will be billed directly by Verizon (or equivalent). Units will be pre-wired with telephone jacks.

(5) The cost of sewage is obligated to the condominium owners in common.

(e) SUBSOIL CONDITIONS

(1) The soil boring tests were performed by DK Drilling of N.Y. on December 9 and 10, 2015. The structural engineer has designed footing and foundation that take into account the recommendations of soil boring evaluations and reports.

(2) There did not appear to be any danger from flooding, either due to water table in the area or an overflow from the other bodies of water. There were no signs of potential mudslides or erosion observed. Since the building is not located in FEMA flood zone, no flooding, mudslide or erosion is expected. There is no evidence of settlement or moisture penetration or seepage in the foundation wall and floor in the cellar. The exterior finished grades shall be sloped away from the building, providing positive drainage without ponding.

(3) The Site is approximately 19,500 square feet in area. The site previously contained a large one-story commercial building consisting of warehouse and factory that was constructed in 1947. Prior to 1947, the site was occupied by residential buildings. The area of concern includes soil vapor beneath the western portion of the site, which contained a parking garage and storage space. During testing, petroleum related VOCs were detected at elevated concentrations. Site-Specific(Track 1) Soil Cleanup Objectives(SCO) were established. Following soil remediation, the Site met the Track 1 Site-Specific SCOs which is protective of public health and the environment for its planned use. Engineering controls such as monitoring are not required for Track 1 cleanup. Track 1 does not contain use restrictions and do not require long term institutional or engineering controls; a Site Management Plan is not required. The site will continue to keep the little E designation.

(4) The site will be protected by a vapor barrier installed underneath the slab in the cellar and first floor of the property as well as along the outside surface of foundation walls from bottom to grade. The vapor barrier will be installed as a precautionary measure. The vapor barrier does not require any special operation or maintenance activities. If the vapor barrier is breached during future construction activities, vapor barrier material will be fastened to the existing vapor barrier material and fastened to the walls under the floor slab of the building in accordance with manufacturer specification.

(5) For more details and to view the publicly available documents, Purchasers and Unit Owners can visit the following website of OER:
https://a002-epic.nyc.gov/app/search/advanced
Project ID: 15CVCP141Q
Project Number: 15EH-A153Q

(f) LANDSCAPING

(1) Grass cover: None

(2) Plantings: The Pedestrian Walkway on 1st floor will be provided with planters of various shrubs and evergreen plants.

(3) Trees: Four New Street trees (type: evergreen) will be planted in the public sidewalk along 34th Street in accordance with NYC Department of Parks requirements.

(4) Fencing: Pedestrian Walkway on 1st floor from 33rd and 34th Street will be equipped with decorative metal fence, and shall be structural stabile, and braced if required. Decorative metal panel will be made of rust-proof painted steel frame with 0.14" thick stainless steel wire infill, 41% open area(or equal), The height of fencing varies from 8'-2" to 14'2" from grade along property line of adjacent building.

(5) Gates: Entry/Exit to the Pedestrian Walkway will be through decorative metal panel gate with panic device. Decorative metal panel will be made of rust-proof painted steel frame with 0.14" thick stainless steel wire infill, 41% open area(or equal).

(6) Garden Walls: None

(7) Retaining Walls: None

(8) Display Pools / Fountains: None

(g) BUILDING SIZE

(1) Total Height: Approximately 73'-0" from Average Legal Grade to Top Roof.

(2) Crawl Spaces: None

(3) One(1) Cellar / No Sub-Cellar Space

(4) Number of Floors: Eight(8) (including Cellar)

(5) Equipment rooms: They shall be located in the Cellar and Roof and include Mechanical rooms used for building utilities, including sprinkler, plumbing and electrical systems.

(6) Parapet: Rooftop parapets shall be a min. of 42” high above finish roof

(h) STRUCTURAL SYSTEM

Reinforced concrete foundation walls, columns and shear walls are to be supported by a 3-6" thick reinforced concrete mat slab foundation for the North Residential Building. Spread footings are provided to support Commercial floors and South Residential Building beyond North Residential Building base.

Building is constructed of flat plate system with reinforced concrete beams, columns, and reinforced shear wall resisting wind and seismic force. Underpinning work is not necessary and is not proposed. Typical structural floors will be constructed of 8" cast in place reinforced concrete slab. Finished wood floor will be installed with wood flooring urethane adhesive with moisture vapor control and sound reduction complying with BC 1207.3 to floor slab at living areas. Adhesive shall comply VOC compliant per SCAQMD rule 1168, Bostik MVP4(or equal). Porcelain floor tile shall be installed with thinset application over floor slab in Bathrooms.

A sub-grade drainage system is provided for the foundations of the building. *4" perforated drainage pipes under cellar slab and 6" gravel fill with non-woven filter fabric wrapped over are provided for* the footing drainage to carry water to sunp pump. Vapor Barrier (Preprufe 300R by WR Grace or approved equal) and Water proofing membrane (Bithuthene 4000 system by WR Grace or approved equal) applied on negative-side will provide water proofing for the foundation walls and floor slab.

(1) Exterior of buildings:

(i) Walls:

The majority of front facade of each building shall have a 4" brick veneer, 2" air space with 6" metal studs back up wall filled with 5 1/2" Batt insulation(R-21), 2" rigid insulation board(R-10ci) over 5/8"exterior sheathing, and 5/8" gypsum wall board finish interior, providing minimum STC value of 50.

The remaining portion will be window wall system consisting of aluminum thermal-break frames, fixed lites glass and casement windows with double-pane insulated glass unit.

The side and rear façade shall have an EIFS with drainage system over 6" metal studs back up wall filled with 5 1/2" Batt insulation(r-21) providing minimum STC value of 45. The EIFS stucco system shall consist of (starting on the interior side) a 5/8” Dens-glass Gold sheathing, followed by 2” Rigid XPS insulation board(R-10ci), reinforced fiberglass mesh, a primer and base coat – and finished with a finish coat.

New York City’s Façade Inspection Safety Program (“FISP”), also known as Local Law 11/98 applies to this building. Once the first temporary Certificate of Occupancy is issued, the five-year “grace period” begins for inspection of exterior walls and appurtenances periodically. After this five-year period is over, the building must file during the next applicable cycle. Unless Sponsor still controls the Board at such time, the obligation to comply with FISP shall be solely on the Unit Owner-controlled Board. Sponsor shall have no responsibility or obligation to organize such inspections after the termination of the Sponsor controlled period. The cost of retaining a Qualified Exterior Wall Inspector to perform this inspection and file the report, as well as making any necessary repairs, will be a Common Expense in the future. The cost of retaining a Qualified Wall Inspector is currently approximately $5,000; Sponsor makes no warranty or representation that the law will not change or what the actual cost of compliance will be. In the same fashion, the Condominium Board will be responsible for maintaining the sidewalks in accordance with the requirements of the Department of Transportation.

All interior walls are non-combustible and non bearing walls made of metal stud with 5/8”gypsum boards. Demising walls between apartments/corridors will be fire rated walls with two layers of 5/8” gypsum layers and a sound attenuation batt(R-11) between studs.

(ii) .

All windows in the building shall be aluminum, thermally broken frame casement windows, with metal clad exterior finishes and metal screens. The glasses are double-glazed, insulated unit. Window wall-opening will be sealed with thermal insulation foam rod and waterproof silicone caulking.

All windows and doors are provided by 'Crystal Windows' or equivalent and Manufacturer is to guarantee that windows and window wall system will be free from defects in material, manufacturer shall provide a warranty for one(1) year from the date of purchase, workmanship and watertight for a period of one (1) year from the date of TCO, limited to glass and one(1) year for product and components other than glass.

Lot line windows(3'wide X 7' high, fixed glazed) with Sprinkler deluge system will be provided on 3rd, 4th and 5th floor off Residential Corridor only at North facade of Residential buildings. There are no lot line windows in Residential units.

All requirements for NYC light and air regulations for windows have been followed.

(iii) Landmarks
The building is not a Landmark. Not Applicable

(2) Parapets and Copings:

The Roof Parapet is constructed of brick veneer over 8" CMU back up with vertical reinforcing bar and ladder type horizontal joint reinforcing with adjustable ties A 16" o.c. at front facade, EIFS system over 8" CMU back up with vertical reinforcing bar and ladder type horizontal joint reinforcing with adjustable ties A 16" o.c. at side and rear of Residential buildings. The Roof Parapet over Commercial Space is constructed of EIFS system over 8" CMU back up with vertical reinforcing bar and ladder type horizontal joint reinforcing with adjustable ties A 16" o.c. The copings will be 4" thick precast cap stone, anchored to CMU wall with stainless steel strap anchor with split-tail and drive anchor.

The parapet wall shall have 2" rigid insulation board and 3 ply water proofing membrane with white roof finish.

(3) Chimneys and Caps:
Each Residential building will have a trash compactor and rubbish chute. The chute vent is constructed of 16 ga. aluminized steel with vents and metal flashing collars.

(4) Balconies and Terraces:
A portion of the roof at 6th & 7th floor will be used for private terraces which are not allocated as common and will not be realized in the Certificate of Occupancy, for the exclusive use of unit owner of the following Residential units: N2D, S2D, N6A, N6B, S6A, S6B, N7B, S7B.
The terrace floors are constructed cast in place reinforced concrete and will be finished with concrete pavers over a membrane roofing system. The terraces are surrounded with parapet, constructed of brick veneer over 8" CMU back up with vertical reinforcing bar and ladder type horizontal joint reinforcing with adjustable ties A 16" o.c. The copings will be 4" thick precast cap stone anchored to CMU wall with stainless steel strap anchor with split-tail and drive anchor. Roof terrace doors shall be made of aluminum thermally broken frame and insulated

glass, are by 'Crystal Windows' or equivalent, and have an one(1) year warranty, in compliance with NYC Dept. of Building regulations. The door is not compliant with ADA requirements. Shared Terraces will have decorative metal fence terrace divider. The decorative metal fence will be made of rust-proof painted steel frame with 0.14" thick stainless steel wire infill, 41% open area(or equal). The height of fence is maximum 6'-0" from finished floor. Dual roof drains will be provided for storm water. See section (j)7 for specification.

Some Residential units will have balcony for the exclusive use of unit owner of the following Residential units :
N3A, N3G, N3I, S3A, S3G, S3H, N4A, N4G, N4I, S4A, S4G, S4H, N5A, N5F, N5G, S5A, S5G, S5H, N6A, N6E, N6F, S6A, S6E, S6F, N7A, N7C, N7D, S7A, S7C, S7D

Balcony floor will receive non-slip traffic coating for pedestrian. Underside of balcony will be concrete slab painted with waterproof paint. Balconies are enclosed by 42" high vertical steel guardrail. Handrail and steel posts shall be rust-proof painted steel and balusters shall be 3/4" steel pickets @ 4" maximum clear spacing. Balcony doors shall be made of aluminum thermally broken frame and insulated glass, are by 'Crystal Windows` or equivalent, and have an one(1) year warranty, in compliance with NYC Dept. of Building regulations. The door is not compliant with ADA requirements. Shared balcony will have decorative metal fence divider made of rust-proof painted steel frame with 0.14" thick stainless steel wire infill, 41% open area(or equal). The height of fence is maximum 6'-0" from finished floor. There will be no drains on balconies. Balconies are to be pitched and drained to the side within the property.

There are two common recreation roofs are provided. There is a Common Terrace on 2nd floor with maximum occupancy load of 29, and there is a Recreation space on roof above 7th floor of each Residential building with maximum occupancy load of 18. The egress capacity from these common recreation roofs exceeds the min. required occupant load as per table 6-2 of NYC Building Code.

(5) Exterior Entrances:

(i) The Residential Lobby and Vestibule exterior doors shall be made of aluminum thermally broken frame and insulated glass by 'Crystal Windows' or equivalent, and have a 1 year warranty. The locking mechanism shall be commercial keyed entry lock with electronic strike. In compliance with NYC Dept. of Building regulations, the exterior entrance is compliant with ADA requirements. Entrances to the Commercial Space are aluminum storefront type door with full vision tempered glass panel. Exterior doors at stairwell and roof access doors are painted flush panel hollow 1 3/4" thick door with hollow metal frame.

(ii) Mailbox: US Postal Service approved type mailboxes are located near elevator in each Residential Lobby. Mailboxes are manufactured by Auth-Florence (or equal) and are to be brushed aluminum finish.

(iii) Lighting: Lighting in front of building shall be (2) 60 Watt fluorescent wall sconce adjacent to building entrance. See section (q) for specification.

(iv) The area in front of the entrance shall be sloped away from the building for drainage.

(6) Service Entrances:

(i) Not Applicable

(7) Roof and roof structures

(i) Roof: There is Roof over 1st floor for Recreation Space and Mechanical Roof. There is Roof over 7th floor for each Residential building for Recreation Space and Mechanical Roof. There are Roof Terraces on 2nd, 6th and 7th floor for private use of unit owners.

(a) Material; 3 ply modified bitumen roof system

(b) Insulation; Min. 4" tapered rigid insulation board (r-20 c.i.)-Roof insulation entirely above deck in climate zone 4a as per Section ECC 502 Table 502.2(1)

(c) Surface finish; Concrete paver(or equal) with pedestal system for Recreation Space and private Roof terraces, Stone ballasts for Mechanical Roof Space.

(d) Roof Warranty: Roof will have a ten(10) year manufacturer's warranty for materials from the date of purchase and one(1) year on labor from the date of TCO.

(e) Flashing material around the perimeter of the building shall be aluminum.

(ii) Drains:

(a) Roof drains with secondary emergency roof drains shall be provided for storm water at Roof over 7th floor, Terraces on 6th & 7th floor, Roof over 1st floor and Pedestrian Walkway at 1st floor. The storm drainage system will be a gravity type that is connected to public street combination storm/sewer. Storm piping will be cast iron.

(b) Gutter and leaders: Not Applicable

(iii) Skylight: Not Applicable

(iv) Bulkheads

(a) Stair bulkhead shall be constructed with 8" CMU wall with EIFS finish exterior and paint finish interior.

(b) Elevator bulkhead shall be constructed with Reinforced concrete shear wall and 8" CMU wall with EIFS finish exterior, paint finish interior.

(c) There shall be condensers installed above the bulkhead structure.

(v) Metal work at Roof Level

(a) No exterior, metal stairs proposed

(b) Vertical service ladder to be steel painted black. Gooseneck and exhaust vents shall be stainless steel.

(c) No Railings provided at Roof level

(d) No Hatches to Roof proposed

(e) Roof flashing material around the perimeter of the building shall be stainless steel.

(vi) No rooftop antennae, cell phone towers, satellite dishes, lighting protection equipment are proposed.

(8) Fire Escapes: None

(9) Yards and Courts:

Front Yard - None

Rear Yard - There is Rear yard equivalent of 60" wide at Roof over 1st floor Commercial Space.

(i) Paving; concrete paver with pedestal system

(ii) Drainage; (7) Dual roof drains made of cast iron shall be provided.

(iii) Railings; None

(iv) Stairs; None

(v) Fencing; None

(vi) Walls; None

(10) Interior stairs:

(i) There are 2 sets of egress stairs for each Residential building servicing Residential units form 1st floor to Roof. Cellar will have 2 separate egress stairs connected to Street lobby on 1st floor.

(ii) The stair enclosures will be constructed of reinforced concrete and/or concrete block and/or 2hr fire rated gypsum board wall and will be painted.

(iii) The stairs will be constructed of reinforced concrete.

(iv) Painted steel tube handrails and vertical pickets 4" apart will be provided.

(v) Guard rails shall be painted steel.

(11) Interior Door and Frames

(i) The entrance door to each Residential unit will be 1 3/4" thick FPSC 1 1/2 hour fire rated hollow metal, STC 35, with hollow metal frame with non-combustible stone saddle. Interior doors within the Residential unit will be 1 3/4" thick solid core wood door with wood frame.

(ii) All corridor doors and frame will be painted flush-panel hollow metal, 1 3/4" thick FPSC 1 1/2 hour fire rated doors.

(iii) Egress Stair doors and frame will be painted flush-panel hollow metal, 1 3/4" thick FPSC 1 1/2 hour fire rated doors with stone saddle

(iv) All Roof and Cellar doors and frame will be painted flush-panel hollow metal, 1 3/4" thick FPSC 1 1/2 hour fire rated doors.

(12) Elevator:

i. Number of Passenger Elevators: two(2) Passenger elevators, one per each residential building

ii. Manufacturer and Capacity: Hollister-Whitney Elevator Corp., 3500 lbs, based on 180 lbs per person average, number of passenger is 19 passengers.

iii. Type of Operation: Passenger, Fireman service access key and floor indicator on 1st floor

iv. Automatic: VVVF AC

v. Floors Served: 9 floors

vi. Type: Overhead geared

vii. Doors: Automatic, single speed center opening

viii. Location of Control Room: Roof

ix. DC Motors: None

x. AC Motor-Generator Set: None

xi. Other: AC motor by Marathon

(13) Elevator Cabs

i. Manufacturer: CEC Elevator Cab Company

ii. Floor: Ceramic tile

iii. Walls: Front wall - Brushed stainless steel panel
Rear wall – Wood veneer panel base & Mirror upper panel
Side walls – Wood veneer panels

iv. Ceiling: Brushed stainless steel panel

v. Lighting: Recessed and concealed LED lighting

vi. Entrance @ Lobby: Brushed stainless steel doors

vii. Entrance @ Upper Floors: Painted metal doors

viii. Alarm Safety: Alarm bell and Emergency call button as per New York City Elevator code.

An alarm button rings bell in shaft. The bell shall be connected to power supply with battery backup.

(i) Auxiliary Facilities

(1) Laundry Rooms:
(i) Each unit has a laundry unit in the apartment. Unit is Electrolux / Model # EIFLS20QSW / Stack Kit 24 / EIED200QSW ventless washer/dryer.

(ii) Electric dryers to be present in each unit

(iii) Ventless washer and dryers are used and to be placed in each unit

(2) Refuse Disposal

(i) Incinerator: Not Applicable

(ii) Compactor: (1) hydraulically operated horizontal extruder-type compactor (Model # Power-11 by Extruder Compactor, Capacity of 1,500 lbs. per hour) is located in the Compactor Room at Cellar for each Residential building.

a. Chute: There is (1) trash chute accessible on 2nd floor thru 7th floor

(iii) Approvals: Not Applicable
(iv) None
(v) Residential refuse shall be collected at the sidewalk by the Department of Sanitation of the City of New York.

(3) Package Rooms:

(i) Each Residential building lobby will be equipped with Package Room with shelving to store delivered parcel packages. The package room has key fob system for access and security.

(4) Storage Rooms:

(i) Each Residential building will have Storage Room with 21 compartments on Cellar. Each compartments will be separated by steel frame cage with 2"x2", 81% open wire mesh and provided with one door lockable by the unit owner. Each cage shall be minimum 6' high above finished floor.

(5) Bicycle Rooms:

(i) There are indoor Bicycle Rooms equipped with racks for 25 bicycles on 2nd floor of each residential building. User shall be responsible for security of his/her belongings. All residents are accessible to Bicycle Rooms.

(j) Plumbing and Drainage

1. Domestic water supply for the building will be obtained from the City of New York 8" water service main located on 34th Street with 4" domestic water service incoming. Copper piping will be used throughout for domestic cold and hot water supply and will be insulated with Neoprene 1" foam insulation.

   The water service will be metered and have a main shut-off valve and backflow prevention system is located in the Cellar water meter room Room.

   There are no on-site storage tanks or storage systems for the water supply.

   The water pressure for domestic water servicing the condominium is provided by street pressure from the New York City Sewer located on 34th Street. In addition, a supplemental booster pump shall be installed in the cellar. Booster pump will have a 1 year warranty.

   a. Hot Water Supply -Domestic hot water supply for residential units will be provided by Gas-Fired hot water heaters located in roof mechanical room.
      Manufacturer: AO Smith
      Model: BTH-250
      Capacity: 100 Gallon
      Number of equipments : Total of six(6), three(3) for each Residential building
      Fuel : Natural Gas
      Control : Hot water temperature controlled by Aquastat
      Part warranty : one(1) year
      Warranty : three(3) years

   b. Operation and Maintenance (O&M) manuals and original balancing report shall be provided by Sponsor.
   c. The cost of the hot water supplied to Residential units for heating is billed as part of Residential common charge.

2. Fire protection system:

   Sprinkler System

   The building will provide with a fire sprinkler and standpipe systems in the subject premises as required by and pursuant to the NYC Building Code. The residential units, commercial units, all interior public spaces and corridors will be protected by the sprinkler system pursuant to NYC code. Sprinkler water supply for the building will be obtained from the City of New York via two 6" fire service main located on 33rd Street and 34th Street Sprinkler riser and floor control valves are located in the staircase on each floor

   Sprinkler Equipment and Piping

   a. A wet-pipe service will be provided for the sprinkler, which will supply a single riser located in each of the fire stairs. The standpipe systems will riser in each fire stair with a 2-1/2"fire hose valve at each main floor landing.
   b. A fire pump will be provided, equipped with a jockey pump controller and NYC approved fire pump controller, and will be located in the cellar level fire pump room. Both fire

pump and jockey pump will require periodic maintenance. Jockey and main fire pump will have a 1 year warranty.

c. 2-1/2"fire hose valve will be provided on the wall of each stairway landing at each floor.
d. Sprinkler heads are to be located be throughout the building pursuant to NYC Building Codes. All units and corridors will be provided with a combination of pendant, sidewall, and extended sidewall sprinkler heads in required areas. The sprinkler heads are to be manufactured by "Reliable" model G4 (or equivalent). The sprinkler heads shall be the normal temperature range from 135°F to 175°F. Intermediate high temperature range from 175 °F to 200 °F for mechanical room, dryer room. Sprinklers are to be omitted in bathrooms 55sq.ft and and closets less than 12 sq.ft.

Location	**Head type**	**Remarks**
Parking	Upright	Dry system
Outdoor	Upright	Dry System
Loading dock	Upright	Dry System
Utility rooms	Upright	Wet system
Corridors	Concealed	Wet system
Lobby	Concealed	Wet system
Commercial	Upright	Wet system
Recreation spaces	Concealed	Wet system
Living Room	Concealed sidewall	Wet system
Kitchen	Concealed	Wet system
Bedroom	Concealed sidewall	Wet system
Washer closet	Concealed	Wet system
Bathroom	Concealed	Wet, various location per notes above
Walk in closet	Concealed	Wet, various location per notes above
Refuse storage room	Concealed	Wet system

e. The sprinkler and standpipe system will have an combined Siamese connection for the Fire Department, located in front of the building on 33rd Street and 34th Street Siamese connection will requirement periodic maintenance.
f. Sprinkler protection will be provided in rubbish chutes and trash rooms pursuant to NYC Building Code.
g. The parking area shall be provided with a dry sprinkler system with required coverage pursuant to NYC Building Code
h. The building will be fully sprinklered with sprinkler valve assembly, supplying the sprinkler system from fire standpipe risers on alternate floors.

3. There are no water storage tank(s) and enclosures.

4. The street water pressure hydrant flow test was performed by NYC Department of Environmental Protection on February 13, 2019. The static pressure taken on an 8 inch water main which is fed from two directions on the west side of 34th street 1st hydrant north of 38th Avenue was 62 pounds per square inch. The residual pressure at this point was 61 pounds per square inch when 500 gallons of water per minute were flowing from the north side of 38th Avenue 1st hydrant west of 33rd street.

5. The second street water pressure hydrant flow test was performed by NYC Department of Environmental Protection on February 05, 2019. The static pressure taken on an 8 inch water main which is fed from two directions on the west side of 33rd street 1st hydrant south of 38th Avenue was 64 pounds per square inch. The residual pressure at this point was 63 pounds per square inch when 500 gallons of water per minute were flowing from the west side of 33rd Avenue 1st hydrant south of 37th street.

6. Sanitary sewage system.
   Fixtures above grade will drain by gravity to a sanitary house trap in the cellar connect to NYC Sewer Main located on 34th Street. Fixtures below grade will be drained by gravity into ejector pumps that pump to house sewer connection. Roof drains will be connected to leaders and drain by gravity to house storm trap located in the cellar.
   a. Sewage piping material to be cast iron.
   b. Ejector pumps servicing toilets, clothes wash machines, area floor drains in the cellar will connect to the house sewer lines.
   c. The sewage system shall carry both waste and sanitary sewage from each unit. Sewage shall be carried by gravity to local city sewers.
   d. The cost of water and sewage will be allocated based on water meter usage.
   e. Vent piping from fixture drains, equipment, and stacks will extend to points of termination above the main roof.
   f. Ejector and sump pump located in the cellar are manufactured by Federal Pump and will have a one year warranty.

7. Permit(s) required
   Before starting any work, builders are to obtain work permits from the NYC Department of Buildings.

8. Storm drainage system
   The roof storm drainage system shall be adequate for size of roof. Water shall be disposed of by drains located in all paved areas to the NYC storm sewer.
   a. Catch basins:
      The sidewalk slopes away from the building providing positive drainage without ponding. Under current approved plans, this site will be graded to conduct storm water away from the building. Catch basins are located in the roadway to drain the storm water run-off into the existing New York City Sewer System.
   b. Regular roof drains with secondary emergency roof drains to be connected to the detention tank in cellar, the flow out through the 12” EHCI combined sewer into the existing 12” combined sewer in the street bed of 34th Street.
   c. Piping materials to be cast iron.
   d. There will be no storm pump. Water will be gravity fed into the sewer trap.
   e. There is no drywell proposed on the premises.

   Specification of drains(pr equal)

Location	Type	# drains	Manufacturer	Material	Model#
Parking	Trench	1	MIFAB	14 ga. steel	T275
Pedestrial Walkway	Area Drain	4	Josam	Cast Iron	32100-81
2 fl Roof	Roof Drain	7 pair	JR Smith	Cast Iron	1010-83 & 1070
6 fl Terrace	Roof Drain	2 pair	JR Smith	Cast Iron	1010-83 & 1070
7 fl Terrace	Roof Drain	2 pair	JR Smith	Cast Iron	1010-83 & 1070
Roof	Roof Drain	6 pair	JR Smith	Cast Iron	1010-83 & 1070

(k) Heating

(1)The heating system has been engineered to provide adequate heat output capable of maintaining a minimum indoor room temperature of 68°F as required by NYC Building Code 2014.

The Heating System in the residential units, residential lobby and indoor recreation space unit will be provided by variable refrigerant flow (VRF) split systems/heat pump, including condensing units (CU) located on the roof and interior Air Handler Units (AHU) within each space.

The VRF split systems for the residential units, residential lobby, and indoor recreation space shall be Gree (or approved equivalents) for the indoor units with the size depending on the engineered heat requirements for each room. Outdoor CU units shall be Gree (or approved equivalents). See Section M. Air Condition Outdoor and Indoor Heating and Cooling equipment schedules for location and size specifications. Vibration isolators are installed for each outdoor HVAC equipment, including condensers, & fans. All Refrigerant piping is provided with 1.5” insulation all around.

Each AHU will be controlled by programmable thermostats mounted on the wall of each unit or space to control heating and cooling output.

Each CU and AHU come with a 10-year manufacturer’s warranty.

The Heating System in the commercial space will be provided by electrical heater.

Specifications for electrical heater for commercial unit are as follows:

Brand: Berko

Model: HUH524TA

Fuel Type: Electrical 208/240v

Capacity: 17,100 BTU

There are no boiler, cooling tower, radiator, oil tank proposed on the premises.

(2)Central hot water will be provided by (3) hot water heaters manufactured by A.O. Smith. Located on a hot water heater room on roof for each residential tower, total 6 hot water heaters. Dedicated hot water return is provided as per energy code requirement. The hot water system is designed to provide peak hour usage.

Specifications for Hot Water Heater for all residential units are as follows:

Brand:	A.O. Smith
Model:	BTH-250
Capacity:	100 Gallons
Fuel Type:	Natural Gas
Efficiency:	96%

(l) Gas Supply

(1) Natural gas to be supplied to each unit and connected to burners via shut-off valves. The size of the gas main is to be 5". Natural gas service will share a common gas meter for the building for all residential units for cooking purposes. Residential unit domestic hot water heaters have a separate meter. Residential Unit makeup air units have a separate meter. The first floor retail rooftop units have one separate gas meter.

(2) Gas piping to be made of steel piping.

(m) Air Conditioning

(1) The cooling system has been engineered to provide adequate air conditioning capable of maintaining indoor room temperature of 78°F at 50% relative humidity while the outdoor temperature is 89°F as required by NYC Building Code Section 2014.

Cooling in the residential units, residential lobby and indoor recreation space will be provided by variable refrigerant flow (VRF) split systems/heat pump, including condensing units (CU) located on the roof and interior Air Handler Units (AHU) within each space.
The VRF split systems for the residential units, residential lobby, and indoor recreation space shall be Gree (or approved equivalents) for the indoor units with the size depending on the engineered cooling requirements for each room. Outdoor CU units shall be Gree (or approved equivalents). See Schedules below for Air Condition Outdoor and Indoor Heating and Cooling equipment schedules for location and size specifications. Vibration isolators are installed for each outdoor HVAC equipment, including condensers, & fans. All Refrigerant piping is provided with 1.5" insulation all around.

Each AHU will be controlled by programmable thermostats mounted on the wall of each unit or space to control heating and cooling output.

Each CU and AHU will come with a 10-year manufacturer's warranty.

The heating systems have been designed to provide comfortable conditions capable of maintaining an indoor temperature of 68oF at a point 3 feet above the finished floor in compliance with NYC Building Code Section 2014.

No Boilers, cool towners or burners will be used in this project.

(2) Heating and cooling of each residential dwelling unit will be provided by individual air conditioning with heat pump units manufactured by Gree. The heating and cooling condenser units will be located on the 2nd floor roof and the main roof. Heating system is designed to provide adequate heating during expected anticipated weather condition in

New York. Each indoor air handle unit is ductless and has a dedicated wired wall mounted controller.

(3) Specifications for split air conditioning and heating unit for all residential units are as follows:

Brand:	Gree
Condenser Model:	(62) GMV-48WL/B-T(U), (17) GMV-48WL/B-T(U),
Indoor Unit Capacity:	7,500-24,000 / 8,500-27,000 BTU/H
Fuel Type:	Electricity
Efficiency:	20.00 SEER
Warranty:	5 Years

(4) Specifications for split air conditioning and heating unit for all Common space are as follows:

Brand:	Gree
Condenser Model:	(3) GMV-Q120WM/B-F(U, (3) GMV-Q144WM/B-F(U)
Indoor Unit Capacity:	18,000-36,000 / 20,000-40,000 BTU/H
Fuel Type:	Electricity
Efficiency:	20.5 IEER
Warranty:	5 Years

(n) Ventilation

Ventilation is achieved by operable windows and is provided for all habitable rooms. 100 CFM makeup air is provided to each dwelling unit using energy recovery unit which use all the dwelling toilet exhaust fan to mixed with the outside air.

Mechanical Ventilation is provided throughout the building using equipment specified in this schedule:

LOCATION	MANUFACTURER	MODEL #	AIR QUALITY CFM
PARKING	GREENHECK or equal	GB-360HP	12,000
RESIDENTIAL UNITS Makeup air	GREENHECK or equal	ERCH-45	4200,4100
BATHROOMS Exhaust	GREENHECK or equal	ERCH-45	4200,4100
COMPACT ROOM	GREENHECK or equal	SWD-10	550
KITCHENS	GREENHECK or equal	SWD-8	700
	GREENHECK or equal	SWD-8	800
	GREENHECK or equal	SWD-10	1,250
	GREENHECK or equal	SWD-10	1,100
PET ROOM	GREENHECK or equal	G-130HP	300
COM. TOILET	GREENHECK or equal	G-103HP	500

(o) Electrical System

Electric service will enter the cellar via 33rd Street and will be provided by Con Edison by a 120/208 volts, 3 phase, 4 wire system. Main service and distribution equipment will be located in the cellar electrical room with separate service switches for common, retail space and apartment meter banks. All units will have individually metered electric service, and unit owners are obligated for their own electricity usage. There will also be separate meter servicing for common public spaces and condominium owners are obligated for the electricity usage of these common spaces. The commercial tenant shall be furnished with their own meters and shall arrange for an independent account with utility provider. Panel boards will be located within each unit in an accessible location.

There is one electrical main distribution panel board with 1200 amps, 120/208V, 3 phase, 4 wire for the commercial space in 1st floor.

There is one electrical main distribution with 1600 amp, 120/208V, 3 phase, 4 wire for common public space, which also include the fire pump, fire alarm, domestic booster pumps, corridor/stair lighting and etc.

The electrical wire conductor will be copper.

There is no emergency generator provided on premise.

Building shall provide Arc Fault Circuit Interrupters (AFCI) and Ground Fault Circuit Interrupters (GFCI) as per latest applicable NEC requirements.

The building shall have 100 or 125 ampere, 120/208V, 1Ph, 3Wire, circuit breaker panels in each condominium unit. These breaker panel shall be sufficient to conveniently operate the electrical appliances and systems inside of each condominium unit.

(1) Telephone wiring will be provided to every residential unit and commercial space. Each unit owner will be required to establish utility accounts and obligated to pay their associated telephone charges and initial activation charges.

(2) Cable TV wiring will be provided to every residential unit and commercial space. Each unit owner will be required to establish utility accounts and obligated to pay their associated telephone charges and initial activation charges.

(3) Adequacy

The electrical service provided shall be adequate for a full complement of modern appliances.

(i) Services: There shall be approximately 20-30 circuit breakers per unit.

(ii) Lighting and fixtures

Outside fixtures shall be waterproof type.

The lighting fixtures installed at the premises shall as follows:

Location	**Type**	**Manufacture**	**Model#**	**Watt**
Hallway	Ceiling recessed	Halo Lighting	E41CATSB4010WB	9 watt
Stairway	Flush mount	Progress	P3410	60 watt
Utility rooms	Flush mount	Progress	P3410	60 watt

Bathroom	Wall mount	Maxim	52002SN	16 watt

(iii) Convenience outlets, appliance outlets

Average number per Living room : seven(7)

Average number per bedroom : six(6)

There will be electrical receptacles throughout the condominium unit, pursuant to and in accordance with the NYC Electrical Code.

Tamper-resistant receptacles shall be provided for children plan areas.

Water-resistant receptacles should be installed for exterior use.

(4) Fire Alarm/Smoke Detection System

(i) An automatic smoke, heat, CO and sprinkler fire alarm system will be provided pursuant to NYC Building Code.

(ii) Residential units will be furnished with multiple hard-wired, 120 volt combination Smoke/Carbon Monoxide (CO) alarm with battery backup pursuant to NYC Building code. These devices are not connected to the main building fire alarm system.

(iii) Smoke and heat detector devices will also be installed in common area corridors, mechanical rooms, elevator lobbies and select locations pursuant to NYC Building Code, and these devices will be connected to the main building's fire alarm system.

(iv) The fire alarm control panel will be connected to a central station. The control panel will monitor water flow and tamper switches, smoke and heat detectors, pull stations, fire pump relays, and CO gas detection.

(v) Annunciators will be installed throughout public spaces pursuant to NYC Building Code.

(vi) Pull Stations will be provided in sprinkler room pursuant to NYC Building Code and design specifications provided by the fire alarm engineer for the building.

(p) Intercommunication and/or door signal system, security closed circuit TV

(1) Each unit shall be equipped with a color video intercom system connected to the intercom directory at entry to the building. System enables two-way communication between unit and intercom directory and remote control of main building door. Intercom system is to be Aiphone (or equivalent).

(2) Building shall be equipped with cable TV service provided by independent cable company. In each unit, cable TV outlets shall be provided in each bedroom and in the living area.

(q) Public area lighting

(1) Public corridors shall have wall and/or ceiling mounted LED type lights which are always on.

(2) Stair shafts shall have LED type light at each floor landing.

(3) All publicly lit spaces and all stair fixtures are connected to a battery backup battery to serve in case of power failure.

(4) All lighting, exterior lighting and night lighting in public parts of the buildings to comply with the New York State Multiple Dwelling Laws and New York City Housing and Maintenance Code.

Location	Type	Manufacture	Model#
Residential Lobby	Ceiling mount	Lithonia	FMFL 30840 SALT BZ
Pedestrian Walkway	Floor mount	WAC	WL-LED310-C-BN
Stairway	Wall mounted	Lithonia	T9FB442239
Corridor	Wall mounted	Lithonia	OSC 13F 120 PLPBL
Utility rooms	Wall mounted	Lithonia	OSC 13F 120 PLPBL
Terraces	Wall mounted	Kichler	9234
Garage	Ceiling mount	WareLight	HBLED90
Commercial	Ceiling mount	WareLight	HBLED223
Commercial restroom	Ceiling recessed	Halo	H71CT
Gym	Ceiling recessed	Halo	H995ICT
Kids room	Ceiling recessed	Halo	H995ICT
Lounge	Ceiling recessed	Halo	H995ICT
Conference room	Ceiling recessed	Halo	H995ICT

(r) Garages and Parking areas:

(1) Location of Garage; Cellar with access from 34th Street

(2) Location of Parking areas; Total of 43 self-parking space of 8’-6” X 18’ provided. 2 spaces are accessible spaces with 5’ wide van accessible aisle. 34 spaces are on Semi Automated Stacker System by Harding Steel, Inc.(MEA#437-07-E)

(3) Surfaces; Traffic coating for heavy duty vehicular traffic "SIKALASTIC 710 by SIKA or equal"

(4) Parking; unattended Semi-Automated stacker system provided, CARMATRIX by Harding Steel Inc.(or equal). The CARMATRIX system is under the control of an integrated Program Logic Control(PLC) device that controls a series of electric motors that move the vehicle platforms in the proper sequence to the proper location. Platforms move lateral and/or vertical directions in order to retrieve cars that are parked above the grade level. Each vehicle that needs to be retrieved is delivered mechanically by the system to grade level. A safety gate at the front of each grade level platform rises automatically, and user can enter their car and drive out of the system without the need for a valet attendant. The manufacture will provide warranty of 1 year on all parts and labor, 2 years on mechanical parts and 5 years on structure.

(5) Garage Ventilation; Mechanically ventilated, Greenheck G-103-VG Exhaust fan unit or approved equal

(6) Garage fire protection; A dry sprinkler system and fire hose stations are provided throughout.

(s) Swimming pool: None

(t) Recreation Facilities:

(1) Tennis courts: None

(2) Playgrounds: None

(3) Other recreation facilities: Recreation spaces including Gym/Yoga room, Kids room, Lounge and conference room are provided on 2nd floor. The facility will be available for use by Residential unit's owners. A outdoor Roof terraces are provided at Roof over 1st floor and Roof over 7th floor. The recreation facilities and roof terraces are for residential accessory use only and are non-simultaneous occupancy. The egress capacity exceeds the min. required occupant load as per table 6-2 of NYC Building Code. The proposed number of occupants of the Recreation facilities including Roof Terraces will be listed in the Certificate of Occupancy.

Outdoor Residential Recreation Roof terrace on roof over 1st floor is approximately 2,900 sq.ft.(max. occupant load of 29 people). It will be equipped with tables, chairs and evergreen plants in planters. Floor shall be finished with concrete paver over pedestal system(or equal).

Outdoor Residential Recreation Roof terrace on roof over 7th floor of each tower is approximately 915 sq.ft.(max. occupant load of 10 people). It will equipped with BBQ station including gas grill, sink, ice maker and refrigerator. Dining table and chairs will be provided. Floor shall be finished with concrete paver over pedestal system(or equal). There are Recreation area –Cabanas(NC-1 278 sf for max. occupant load of 3 people, NC-2 278 sf for max. occupant load of 3 people, NC-3 138 sf for max. occupant load of 2 people, SC-1 276 sf for max. occupant load of 3 people, SC-2 278 sf for max. occupant load of 3 people , SC-3 127 sf for max. occupant load of 2 people) on roof over 7th floor of each tower. The Cabanas are separated from roof area with 42” high steel picket fence with gate which are painted and bolted to concrete slab. The gates and locking hardwares will be compliant with FDNY access path requirements. The Cabanas are equipped with portable cabana, tables and chairs.

Recreation space (Gym/Yoga room) is located on 2nd floor of South tower and is approximately 786 sq.ft.(max. occupant load of 16 people). It is equipped with workout equipments, exercise bicycle and treadmill. The floor shall be finished with rubber mat and walls with mirrors. Mechanical ventilation, heating and cooling will be provided by VRF split AC system. Natural ventilation is available with operable windows and doors.

Recreation space (Kid's room) is located on 2nd floor of South tower and is approximately 446 sq.ft.(max. occupant load of 9 people). It is equipped with tables, chairs and bookshelves. The floor shall be finished with carpet and walls to be painted or wall covering. Mechanical ventilation, heating and cooling will be provided by VRF split AC system. Natural ventilation is available with operable windows.

Recreation space (Lounge) is located on 2nd floor of North tower and is approximately 786 sq.ft.(max. occupant load of 16 people). It is equipped with pantry including Refrigerator, microwave oven, sink. No cooking shall be allowed. Wall-mounted TV monitor, tables and chairs shall be provided. The floor shall be finished with wood floor and walls to be painted or wall covering. Mechanical ventilation, heating and cooling will be provided by VRF split AC system. Natural ventilation is available with operable windows and doors.

Recreation space (Conference room) is located on 2nd floor of North tower and is approximately 446 sq.ft.(max. occupant load of 9 people). Tables and chairs shall be provided. The floor shall be finished with wood floor and walls to be painted or wall covering. Mechanical ventilation, heating and cooling will be provided by VRF split AC system. Natural ventilation is available with operable windows.

(u)Permits & Violations:

All required permits will be obtained. Temporary Certificate of Occupancy will be obtained prior to initial occupancy.

(v) Violations:

All outstanding violations, if any shall be cleared prior to the Final Certificate of Occupancy.

(w) Unit Information

Unit floor areas are measured horizontally from the exterior face of exterior walls to the centerline of partitions between units, and also to the exterior face of partitions separating units from corridors, stairs, elevators or any other common elements.

The sponsor shall not construct additional units after the completion of building per DOB approved plans.

- One(1) Commercial unit on 1st floor, accessible from both 33rd street and 34th street

- Seventy seven(77) Residential units on 2nd floor through 7th floor

- Forty three(43) parking spaces on cellar

Residential Unit Description(See floor plans for complete unit description)

North Tower

UNIT	FLOOR	# Bedroom	# Bathroom	Terrace	Balcony	Ceiling Height
N2A	2 fl	0	1	0	0	9'-0" / 7'-8"
N2B	2 fl	0	1	0	0	9'-0" / 7'-8"
N2C	2 fl	1	1	0	0	9'-0" / 7'-8"

N2D	2 fl	2	2	1	0	9'-0" / 7'-8"
N3A	3 fl	1	1	0	1	9'-0" / 7'-8"
N3B	3fl	0	1	0	0	9'-0" / 7'-8"
N3C	3 fl	0	1	0	0	9'-0" / 7'-8"
N3D	3 fl	1	1	0	0	9'-0" / 7'-8"
N3E	3 fl	1	1	0	0	9'-0" / 7'-8"
N3F	3 fl	1	1	0	0	9'-0" / 7'-8"
N3G	3 fl	1	1	0	1	9'-0" / 7'-8"
N3H	3 fl	0	1	0	0	9'-0" / 7'-8"
N3I	3 fl	1	1	0	1	9'-0" / 7'-8"
N4A	4 fl	1	1	0	1	9'-0" / 7'-8"
N4B	4fl	0	1	0	0	9'-0" / 7'-8"
N4C	4 fl	0	1	0	0	9'-0" / 7'-8"
N4D	4 fl	1	1	0	0	9'-0" / 7'-8"
N4E	4 fl	1	1	0	0	9'-0" / 7'-8"
N4F	4 fl	1	1	0	0	9'-0" / 7'-8"
N4G	4 fl	1	1	0	1	9'-0" / 7'-8"
N4H	4 fl	0	1	0	0	9'-0" / 7'-8"
N4I	4 fl	1	1	0	1	9'-0" / 7'-8"
N5A	5 fl	1	1	0	1	9'-0" / 7'-8"
N5B	5 fl	2	2	0	0	9'-0" / 7'-8"
N5C	5 fl	1	1	0	0	9'-0" / 7'-8"
N5D	5 fl	1	1	0	0	9'-0" / 7'-8"
N5E	5 fl	1	1	0	0	9'-0" / 7'-8"
N5F	5 fl	2	1	0	1	9'-0" / 7'-8"
N5G	5 fl	2	2	0	1	9'-0" / 7'-8"
N6A	6 fl	2	2	1	1	9'-8" / 8'-0"
N6B	6 fl	2	1	1	0	9'-8" / 8'-0"
N6C	6 fl	1	1	0	0	9'-8" / 8'-0"
N6D	6 fl	1	1	0	0	9'-8" / 8'-0"
N6E	6 fl	2	1	0	1	9'-8" / 8'-0"
N6F	6 fl	2	2	0	1	9'-8" / 8'-0"

N7A	7 fl	2	2	0	2	9'-0" / 8'-0"
N7B	7 fl	3	2	1	0	9'-0" / 8'-0"
N7C	7 fl	2	1	0	1	9'-0" / 8'-0"
N7D	7 fl	2	2	0	1	9'-0" / 8'-0"

South Tower

UNIT	FLOOR	# Bedroom	# Bathroom	Terrace	Balcony	Ceiling Height
S2A	2 fl	0	1	0	0	9'-0" / 7'-8"
S2B	2 fl	0	1	0	0	9'-0" / 7'-8"
S2C	2 fl	1	1	0	0	9'-0" / 7'-8"
S2D	2 fl	2	2	1	0	9'-0" / 7'-8"
S3A	3 fl	1	1	0	1	9'-0" / 7'-8"
S3B	3fl	0	1	0	0	9'-0" / 7'-8"
S3C	3 fl	0	1	0	0	9'-0" / 7'-8"
S3D	3 fl	1	1	0	0	9'-0" / 7'-8"
S3E	3 fl	1	1	0	0	9'-0" / 7'-8"
S3F	3 fl	1	1	0	0	9'-0" / 7'-8"
S3G	3 fl	2	1	0	1	9'-0" / 7'-8"
S3H	3 fl	2	2	0	1	9'-0" / 7'-8"
S4A	4 fl	1	1	0	1	9'-0" / 7'-8"
S4B	4fl	0	1	0	0	9'-0" / 7'-8"
S4C	4 fl	0	1	0	0	9'-0" / 7'-8"
S4D	4 fl	1	1	0	0	9'-0" / 7'-8"
S4E	4 fl	1	1	0	0	9'-0" / 7'-8"
S4F	4 fl	1	1	0	0	9'-0" / 7'-8"
S4G	4 fl	2	1	0	1	9'-0" / 7'-8"
S4H	4 fl	2	2	0	1	9'-0" / 7'-8"
S5A	5 fl	1	1	0	1	9'-0" / 7'-8"
S5B	5 fl	0	1	0	0	9'-0" / 7'-8"
S5C	5 fl	0	1	0	0	9'-0" / 7'-8"
S5D	5 fl	1	1	0	0	9'-0" / 7'-8"
S5E	5 fl	1	1	0	0	9'-0" / 7'-8"

S5F	5 fl	1	1	0	0	9'-0" / 7'-8"
S5G	5 fl	2	1	0	1	9'-0" / 7'-8"
S5H	5 fl	2	2	0	1	9'-0" / 7'-8"
S6A	6 fl	2	2	1	1	9'-8" / 8'-0"
S6B	6 fl	2	1	1	0	9'-8" / 8'-0"
S6C	6 fl	1	1	0	0	9'-8" / 8'-0"
S6D	6 fl	1	1	0	0	9'-8" / 8'-0"
S6E	6 fl	2	1	0	1	9'-8" / 8'-0"
S6F	6 fl	2	2	0	1	9'-8" / 8'-0"
S7A	7 fl	2	2	0	2	9'-0" / 8'-0"
S7B	7 fl	3	2	1	0	9'-0" / 8'-0"
S7C	7 fl	2	1	0	1	9'-0" / 8'-0"
S7D	7 fl	2	2	0	1	9'-0" / 8'-0"

Parking Units Description

Unit	**Floor**	**Use**	**Auto/ADA/Reg***	**Unit**	**Floor**	**Use**	**Auto/ADA/Reg***
P01	Cellar	Parking	Reg	P23	Cellar	Parking	Auto Low
P02	Cellar	Parking	Reg	P24	Cellar	Parking	Auto Up
P03	Cellar	Parking	Reg	P25	Cellar	Parking	Auto Low
P04	Cellar	Parking	ADA	P26	Cellar	Parking	Auto Up
P05	Cellar	Parking	Reg	P27	Cellar	Parking	Auto Low
P06	Cellar	Parking	Reg	P28	Cellar	Parking	Auto Up
P07	Cellar	Parking	Reg	P29	Cellar	Parking	Auto Low
P08	Cellar	Parking	Auto Up	P30	Cellar	Parking	Auto Up
P09	Cellar	Parking	Auto Low	P31	Cellar	Parking	Auto Low
P10	Cellar	Parking	Auto Up	P32	Cellar	Parking	Auto Up
P11	Cellar	Parking	Auto Low	P33	Cellar	Parking	Auto Low
P12	Cellar	Parking	Auto Up	P34	Cellar	Parking	Auto Up
P13	Cellar	Parking	Auto Low	P35	Cellar	Parking	Auto Low
P14	Cellar	Parking	Auto Up	P36	Cellar	Parking	Auto Up
P15	Cellar	Parking	Auto Low	P37	Cellar	Parking	Auto Low

P16	Cellar	Parking	Auto Up	P38	Cellar	Parking	Auto Up
P17	Cellar	Parking	Auto Low	P39	Cellar	Parking	Auto Low
P18	Cellar	Parking	Auto Up	P40	Cellar	Parking	Auto Up
P19	Cellar	Parking	Auto Low	P41	Cellar	Parking	Auto Low
P20	Cellar	Parking	Auto Up	P42	Cellar	Parking	Reg
P21	Cellar	Parking	Auto Low	P43	Cellar	Parking	ADA
P22	Cellar	Parking	Auto Up				

* Auto Up: Upper level of Semi Automated car lift

* Auto Low : Lower level of Semi automated car lift

* ADA : Handicap parking spot , van accessible

* Reg : Parking spot on floor slab

1. Interior Walls
   i. Unit to Unit: 6” nominal wall with 3 5/8” metal studs and 2” batt insulation and (2) layers of 5/8” type X gypsum wall board on both sides.
   ii. Unit to Corridor: 6” nominal wall with 3 5/8” metal studs and 2” batt insulation and (2) layers of 5/8” type X gypsum wall board on both sides.
   iii. Within Unit: 4” nominal wall with 2 1/2” metal studs and (1) layer of 5/8” type X gypsum wall board on both sides.
2. Interior Finishes

   Interior paint finish of walls and ceilings shall be a level 3 finishes with two coats of primer and 1 coat of finish paint.

   i. Living Areas

Walls:	Painted
Base:	Painted MDF
Floor:	Engineered wood floor
Ceiling:	Painted
Kitchen walls:	Tile Backsplash
Kitchen base:	Painted wood
Kitchen floor:	Strip Wood Floor

Kitchen ceiling:	Painted
Bathroom walls:	Painted wall board with ceramic tile at tub and shower
Bathroom base:	Ceramic tile
Bathroom floor:	Ceramic tile
Bathroom ceiling:	Painted
Vanity top:	Quartz stone or equivalent
Medicine cabinet:	Mirror face

3. Bathroom Fixtures

i. Master Bathroom

Water closet	Kohler “Memoirs” K-3452 or equal
Shower	Kohler “Memoirs” K-T465-4C-Cp or equal
Hand shower	Kohler “Memoirs” K-419-CP or equal
Sink	Kohler “Caxton” K-20000-0 or equal
Sink faucet	Kohler "Coralais” K-15265 or equal

ii. Guest Bathroom

Water closet	Kohler “Memoirs” K-3452 or equal
Shower	Kohler “ Memoirs” K-T464-4C-CP or equal
Bathtub	Duravit "D-code" 700095 000000092 or equal
Sink	Kohler “Caxton” K-20000-0 or equal
Sink faucet	Kohler “Coralais” K-15265 or equal

4. Kitchen equipment

Refrigerator:	GE Profile # PFCS1NJWSS or equal
Dishwasher:	GE Profile # PDW9280NSS or equal
Range:	GE Profile # PGS908SEMSS or equal
Microwave:	GE Profile # PNM1871SMSS or equal
Kitchen Sink:	Elkay DSESR12722 or equal

Countertop: Quartz stone or equal

Kitchen Cabinet: Wood veneered doors and plywood/MDF boxes

(x) Finish Schedule of Spaces other than Units

Level	Room	Floor	Walls	Ceiling	Remarks
Cellar	Garage	Traffic Coat	CMU Painted	Conc. Slab	
	Meter Rooms	Conc. Slab	CMU Painted	Conc. Slab	
	Storage Rooms	Conc. Slab	Gyp.Bd. Painted	Conc. Slab	
	Compactor Room	Conc. Slab	CMU Painted	Conc. Slab	
	Pet Spa	Conc. Slab	CMU Painted	Conc. Slab	
	Laundry Room	Conc. Slab	CMU Painted	Conc. Slab	
	BOH Office	Conc. Slab	CMU Painted	Conc. Slab	
1st Floor					
	Commercial	Conc. Slab	Gyp. bd painted	Conc. Slab	
	Bathrooms	Ceramic Tile	Gyp.Bd. Painted	Gyp. Bd. Painted	
	Residential Lobby	Tile	Gyp.Bd / Wood	Gyp. Bd. Painted	
	Stair	Conc. Slab	Conc./Gyp.Bd. Painted	Conc. Slab Painted	
2nd Floor					
	Corridor	Carpeting	Wallpaper	Gyp. Bd. Painted	
	Stair	Conc. Slab	Conc./Gyp bd painted	Conc. slab painted	
	Refuse Chute	Quarry Tile	Gyp. Bd. Painted	Gyp. Bd. Painted	
	Restrooms	Tile	Gyp. Bd. Painted	Gyp. Bd. Painted	
	Conf. Room	Wood floor	Gyp. Bd. Painted	Gyp. Bd. Painted	
	Lounge	Wood floor	Gyp. Bd. Painted	Gyp. Bd. Painted	
	Kids room	Carpeting	Gyp. Bd. Painted	Gyp. Bd. Painted	
	Gym	Rubber	Gyp. Bd. Painted	Gyp. Bd. Painted	

Bicycle Room	Tile	Wallpaper	Gyp. Bd. Painted
Terraces	Concrete paver	N/A	N/A

3rd thru 7th floor

Stair	Conc. Slab	Conc./Gyp.Bd. Painted	Conc. Slab Painted
Corridor	Carpeting	Wallpaper	Gyp. Bd. Painted
Refuse Chute	Quarry Tile	Gyp. Bd. Painted	Gyp. Bd. Painted

(y) Safety and Warning Devices

Hard wired smoke detectors are provided outside bedrooms in Residential Units, as required by law. Area smoke detectors are installed in all electrical and Mechanical equipment rooms. Carbon monoxide detectors are installed in every residential unit.

(z) Additional Information Required:

(1) The following documents shall be transferred to the condominium management upon transfer of control of building:
- Final As-built drawings- including structural, mechanical, electrical, plumbing, shop drawings
- Operation and Maintenance manuals for mechanical equipment
- Electric system manual
- Equipment warranties
- NDL Manufacturer Roof Warranty
- Major Equipment Start-Up sheets
- Original Test and Balance Reports for HVAC Systems – if available

(2) Asbestos is not present in insulating or fireproofing material anywhere in the building. There are no known records, reports, violations or any other information known or available regarding the presence of lead based paint and/or lead based paint hazard

(3) Units are measured horizontally from the exterior side of the exterior walls (columns, mechanical pipes, shafts, shaft ways, chases, chase ways, and conduits are not deducted) to the centerline of the partitions separating one Unit from another Unit, or separating a Unit from public corridors, stairs, elevators and other mechanical equipment spaces or any Common Elements not within a Unit. Each Residential Unit consists of the area measured vertically from the top of the concrete floor slab below to the underside of the finished ceiling.

(4) No further development has been planned at the property.

END OF REPORT

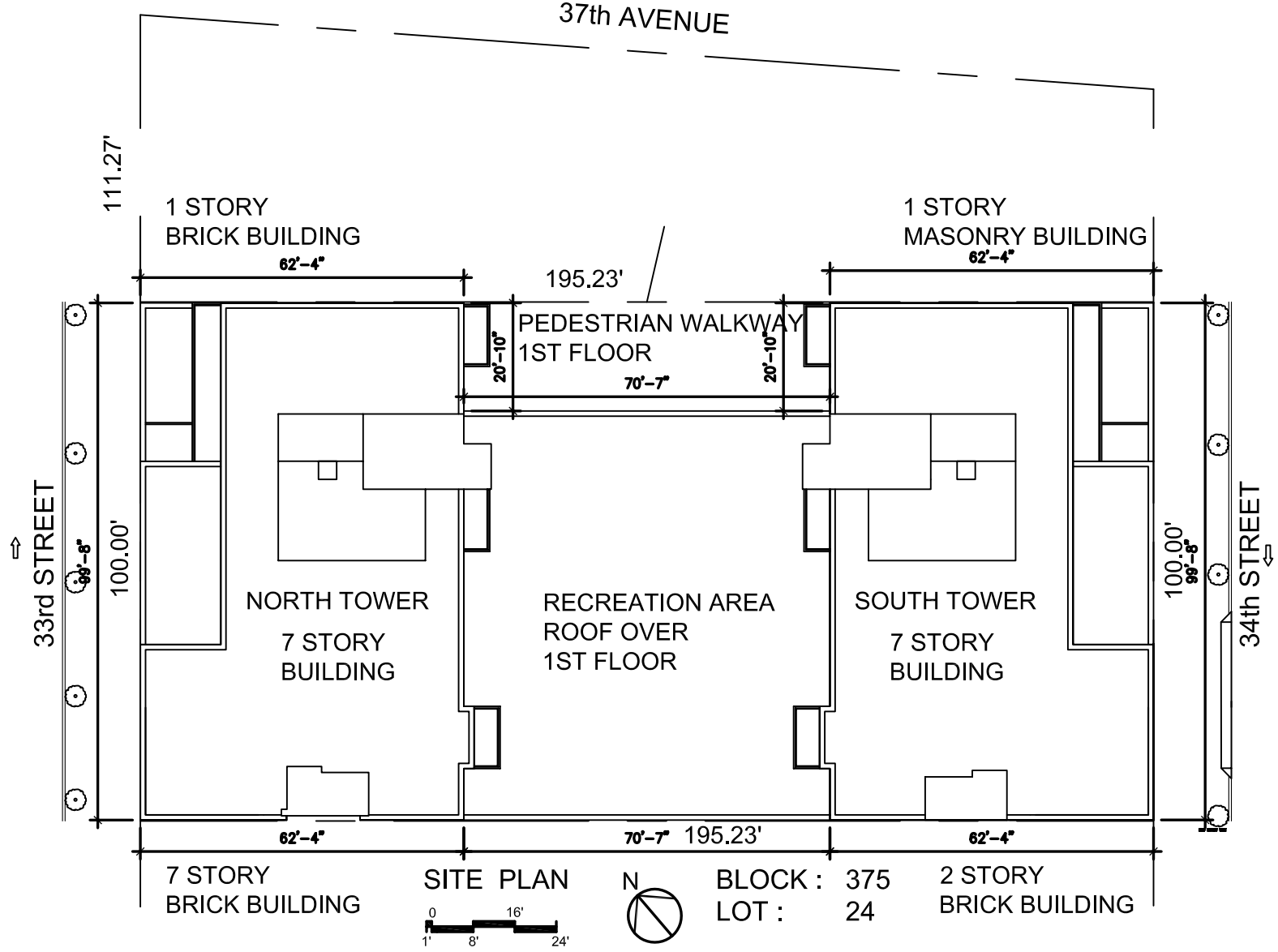

LEGEND

- Units
- C.E. - General Common Element
- R.C.E. - Residential Common Element
- L.C.E. - Limited Common Element for Residential

THE 37-14 34TH STREET CONDOMINIUM
37-14 34th STREET
LONG ISLAND CITY, NY 11101

The Unit Layout square footage and dimensions are approximate and subject to normal construction variances and tolerances, Square footages exceed the usable floor area. This floor plan is based on construction drawings, minor inaccuracies between this floor plan and the actual Unit layout when built will not excuse a purchaser from completing the purchase of a Unit without abatement in price and without recourse against the Sponsor. Sponsor reserves the right to make changes in accordance with the Offering Plan.

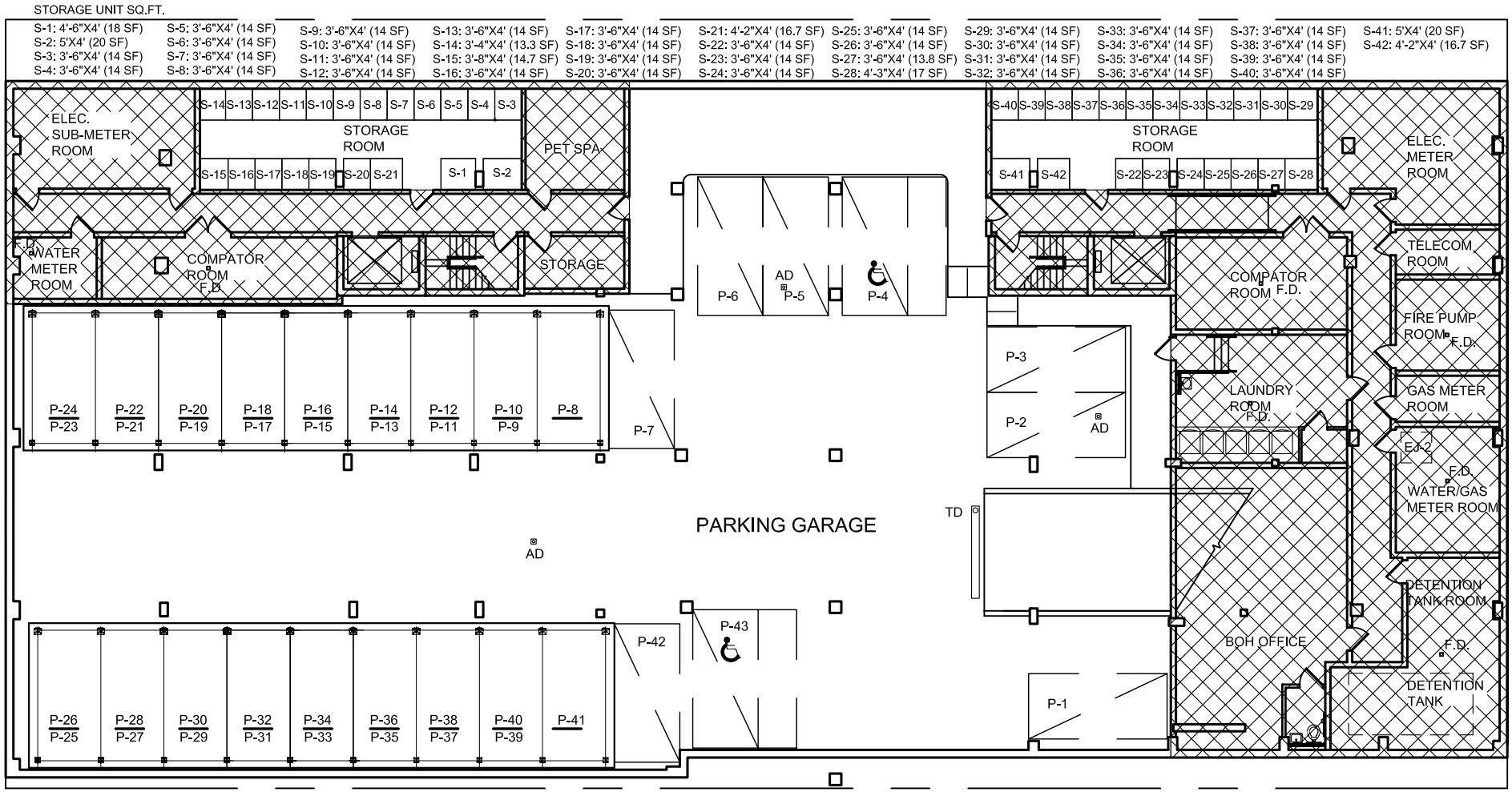

CELLAR PLAN

0 16'
1' 8' 24'

N

LEGEND

Units

C.E. - General Common Element

R.C.E. - Residential Common Element

L.C.E. - Limited Common Element for Residential

THE 37-14 34TH STREET CONDOMINIUM
37-14 34th STREET
LONG ISLAND CITY, NY 11101

The Unit Layout square footage and dimensions are approximate and subject to normal construction variances and tolerances, Square footages exceed the usable floor area. This floor plan is based on construction drawings, minor inaccuracies between this floor plan and the actual Unit layout when built will not excuse a purchaser from completing the purchase of a Unit without abatement in price and without recourse against the Sponsor. Sponsor reserves the right to make changes in accordance with the Offering Plan.

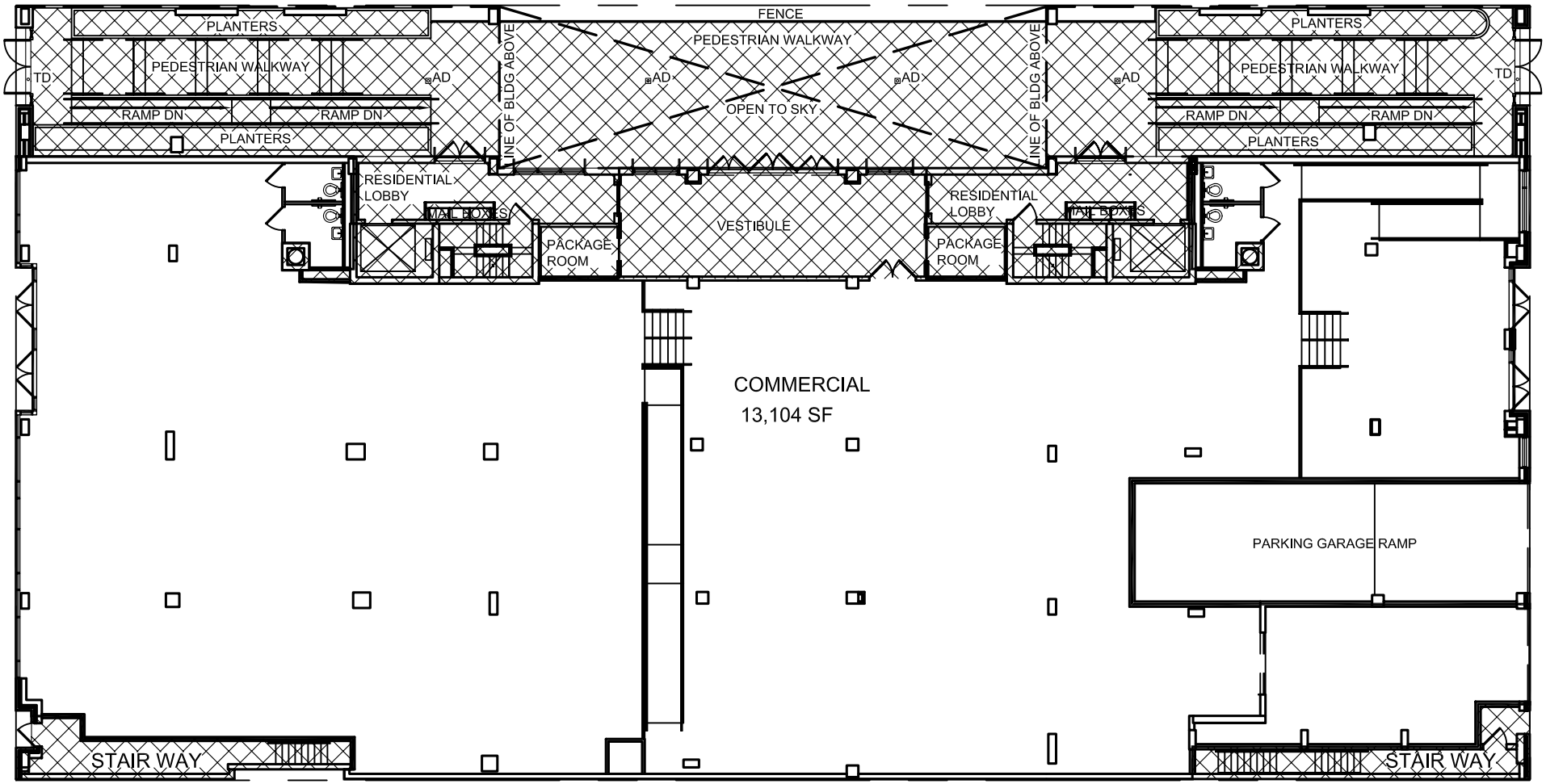

1ST FLOOR PLAN

N

0 16'

1' 8' 24'

LEGEND

- Units
- C.E. - General Common Element
- R.C.E. - Residential Common Element
- L.C.E. - Limited Common Element for Residential

THE 37-14 34TH STREET CONDOMINIUM
37-14 34th STREET
LONG ISLAND CITY, NY 11101

The Unit Layout square footage and dimensions are approximate and subject to normal construction variances and tolerances, Square footages exceed the usable floor area. This floor plan is based on construction drawings, minor inaccuracies between this floor plan and the actual Unit layout when built will not excuse a purchaser from completing the purchase of a Unit without abatement in price and without recourse against the Sponsor. Sponsor reserves the right to make changes in accordance with the Offering Plan.

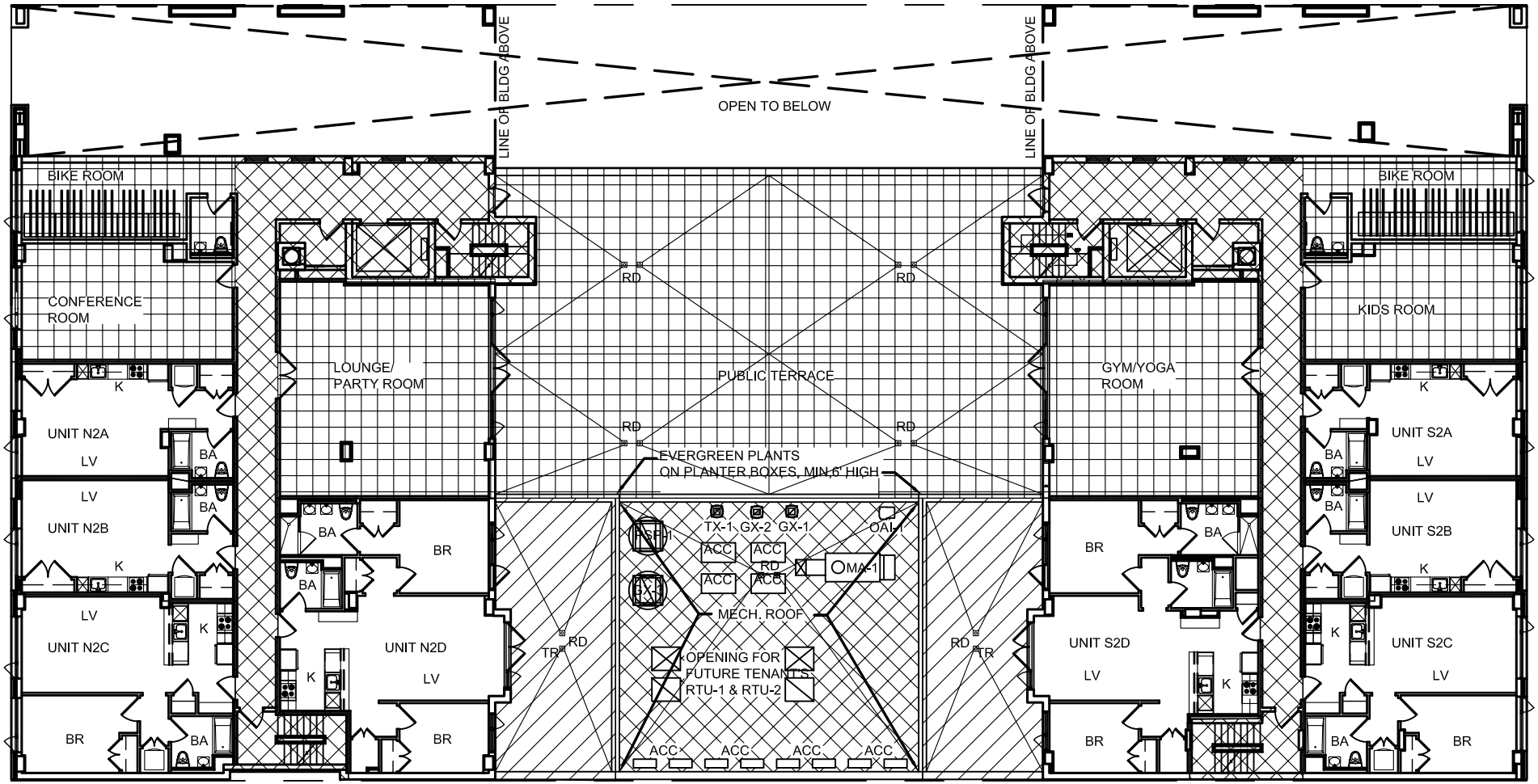

2ND FLOOR PLAN

0 16'

1' 8' 24'

N

MECH. EQUIPMENTS LEGEND :
ACC - AIR COOLED CONDENSER
GX - GARAGE EXHAUST FAN
OAI - OUTSIDE AIR INTAKE FAN
PSP - MAKE UP AIR FAN
RTU - ROOFTOP UNIT
TX - TOILET EXHAUST FAN
MA - FRESH AIR INTAKE FAN

LEGEND

- Units
- C.E. - General Common Element
- R.C.E. - Residential Common Element
- L.C.E. - Limited Common Element for Residential

THE 37-14 34TH STREET CONDOMINIUM
37-14 34th STREET
LONG ISLAND CITY, NY 11101

The Unit Layout square footage and dimensions are approximate and subject to normal construction variances and tolerances, Square footages exceed the usable floor area. This floor plan is based on construction drawings, minor inaccuracies between this floor plan and the actual Unit layout when built will not excuse a purchaser from completing the purchase of a Unit without abatement in price and without recourse against the Sponsor. Sponsor reserves the right to make changes in accordance with the Offering Plan.

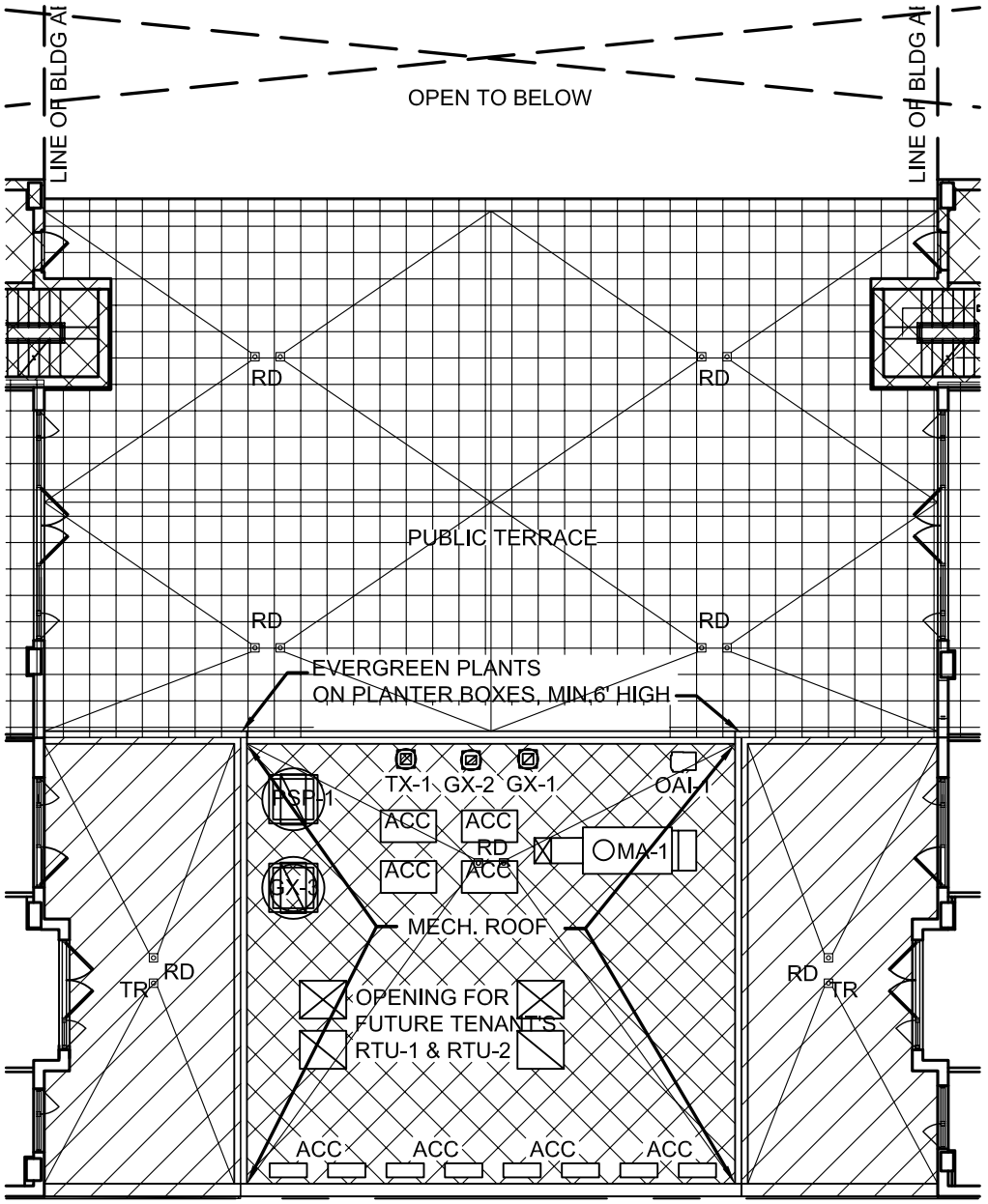

KEY PLAN

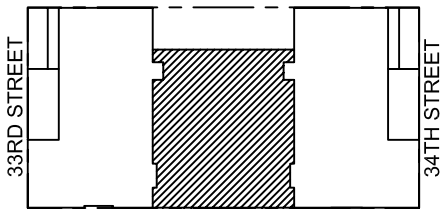

LEGEND

- Units
- C.E. - General Common Element
- R.C.E. - Residential Common Element
- L.C.E. - Limited Common Element for Residential

MECH. EQUIPMENTS LEGEND :
ACC - AIR COOLED CONDENSER
GX - GARAGE EXHAUST FAN
OAI - OUTSIDE AIR INTAKE FAN
PSP - MAKE UP AIR FAN
RTU - ROOFTOP UNIT
TX - TOILET EXHAUST FAN
MA - FRESH AIR INTAKE FAN

0 16'
1' 8' 24'

N

2ND FLOOR ROOF PLAN

222

THE 37-14 34TH STREET CONDOMINIUM
37-14 34th STREET
LONG ISLAND CITY, NY 11101

The Unit Layout square footage and dimensions are approximate and subject to normal construction variances and tolerances, Square footages exceed the usable floor area. This floor plan is based on construction drawings, minor inaccuracies between this floor plan and the actual Unit layout when built will not excuse a purchaser from completing the purchase of a Unit without abatement in price and without recourse against the Sponsor. Sponsor reserves the right to make changes in accordance with the Offering Plan.

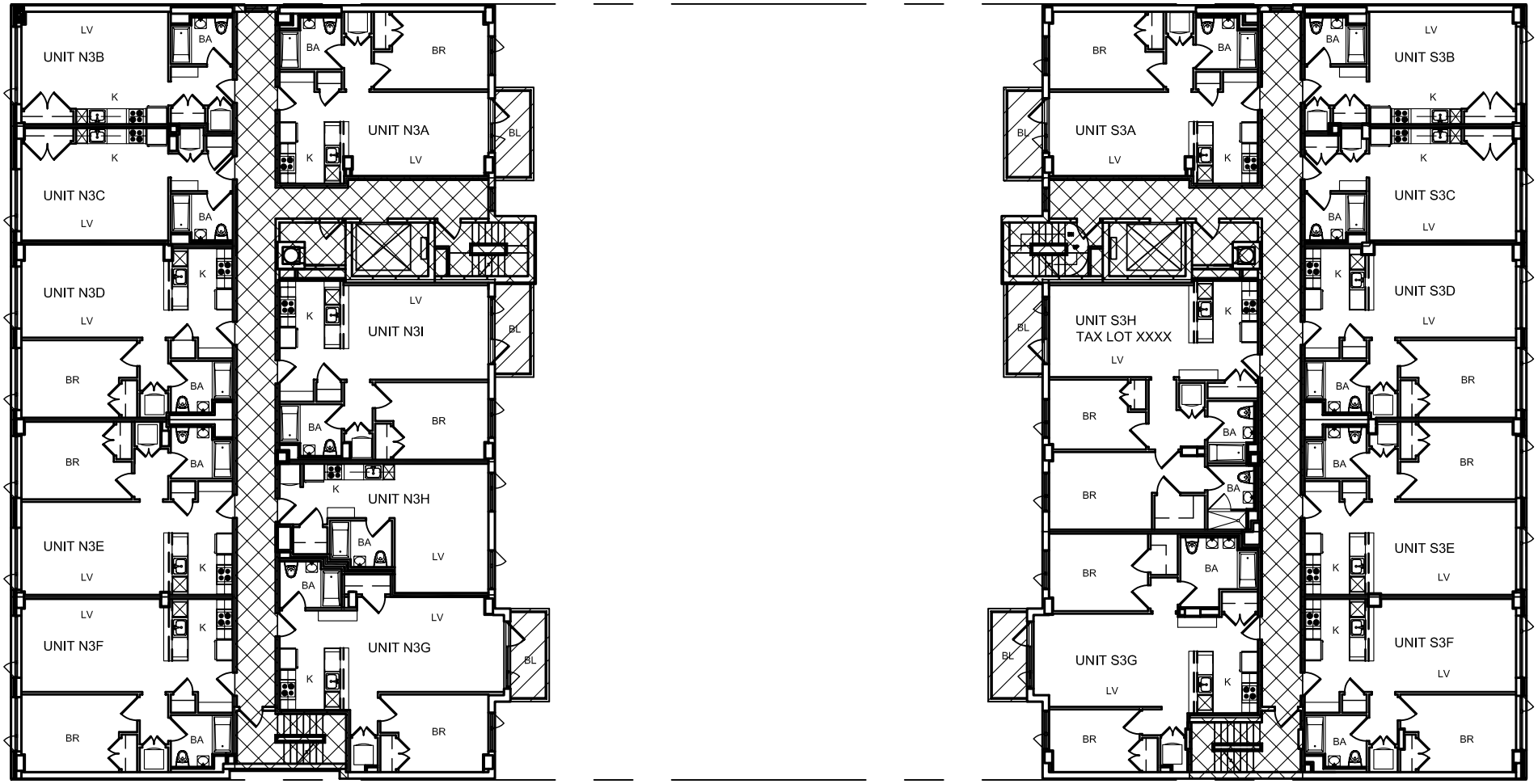

223

3RD FLOOR PLAN

N

0 16'

1' 8' 24'

LEGEND

- Units
- C.E. - General Common Element
- R.C.E. - Residential Common Element
- L.C.E. - Limited Common Element for Residential

THE 37-14 34TH STREET CONDOMINIUM
37-14 34th STREET
LONG ISLAND CITY, NY 11101

The Unit Layout square footage and dimensions are approximate and subject to normal construction variances and tolerances, Square footages exceed the usable floor area. This floor plan is based on construction drawings, minor inaccuracies between this floor plan and the actual Unit layout when built will not excuse a purchaser from completing the purchase of a Unit without abatement in price and without recourse against the Sponsor. Sponsor reserves the right to make changes in accordance with the Offering Plan.

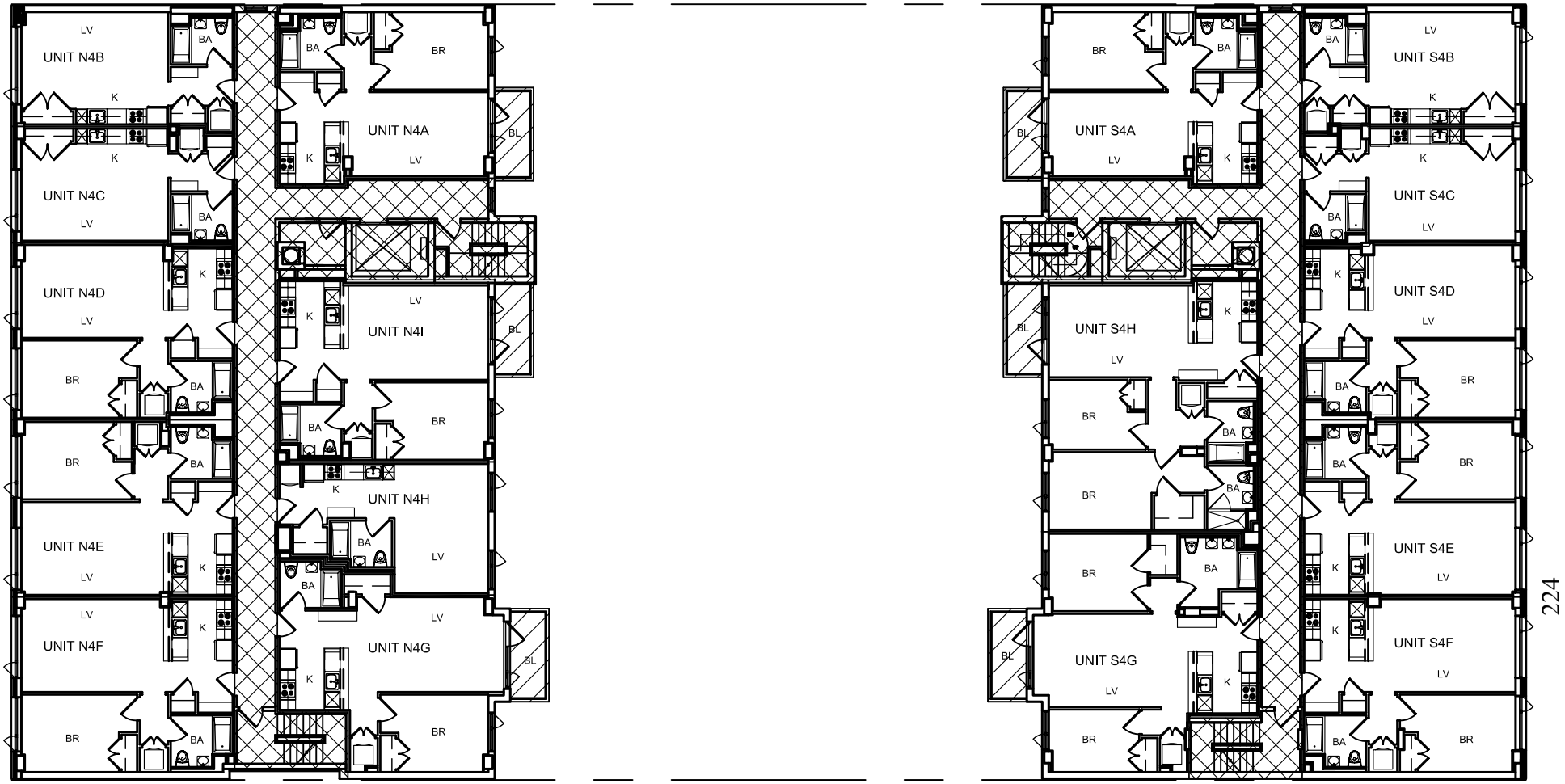

4TH FLOOR PLAN

N

0 16'

1' 8' 24'

LEGEND

- Units
- C.E. - General Common Element
- R.C.E. - Residential Common Element
- L.C.E. - Limited Common Element for Residential

THE 37-14 34TH STREET CONDOMINIUM
37-14 34th STREET
LONG ISLAND CITY, NY 11101

The Unit Layout square footage and dimensions are approximate and subject to normal construction variances and tolerances, Square footages exceed the usable floor area. This floor plan is based on construction drawings, minor inaccuracies between this floor plan and the actual Unit layout when built will not excuse a purchaser from completing the purchase of a Unit without abatement in price and without recourse against the Sponsor. Sponsor reserves the right to make changes in accordance with the Offering Plan.

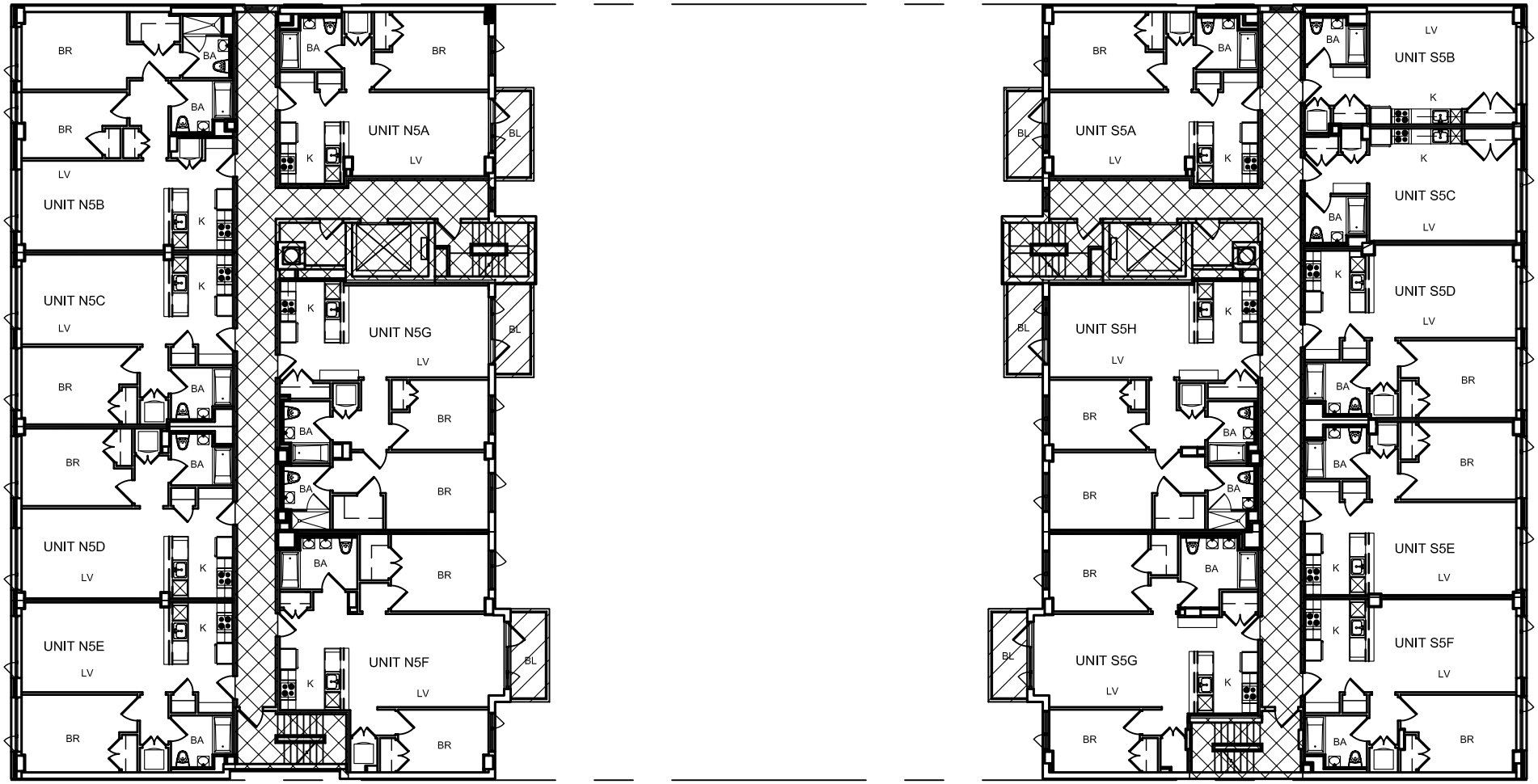

5TH FLOOR PLAN

N

0 16'

1' 8' 24'

LEGEND

- Units
- C.E. - General Common Element
- R.C.E. - Residential Common Element
- L.C.E. - Limited Common Element for Residential

THE 37-14 34TH STREET CONDOMINIUM
37-14 34th STREET
LONG ISLAND CITY, NY 11101

The Unit Layout square footage and dimensions are approximate and subject to normal construction variances and tolerances, Square footages exceed the usable floor area. This floor plan is based on construction drawings, minor inaccuracies between this floor plan and the actual Unit layout when built will not excuse a purchaser from completing the purchase of a Unit without abatement in price and without recourse against the Sponsor. Sponsor reserves the right to make changes in accordance with the Offering Plan.

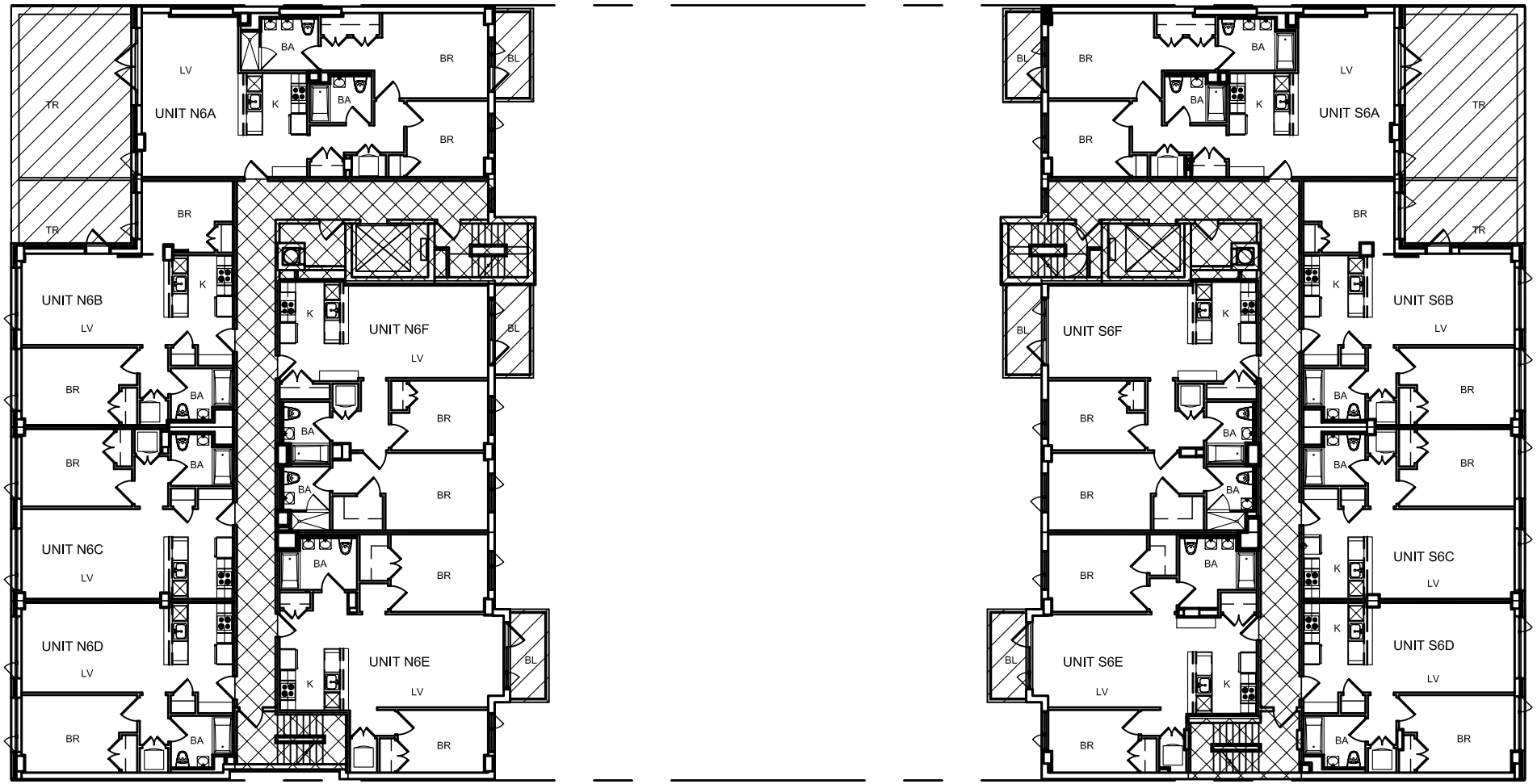

226

6TH FLOOR PLAN

0 16'
1' 8' 24'

N

LEGEND

- Units
- C.E. - General Common Element
- R.C.E. - Residential Common Element
- L.C.E. - Limited Common Element for Residential

THE 37-14 34TH STREET CONDOMINIUM
37-14 34th STREET
LONG ISLAND CITY, NY 11101

The Unit Layout square footage and dimensions are approximate and subject to normal construction variances and tolerances, Square footages exceed the usable floor area. This floor plan is based on construction drawings, minor inaccuracies between this floor plan and the actual Unit layout when built will not excuse a purchaser from completing the purchase of a Unit without abatement in price and without recourse against the Sponsor. Sponsor reserves the right to make changes in accordance with the Offering Plan.

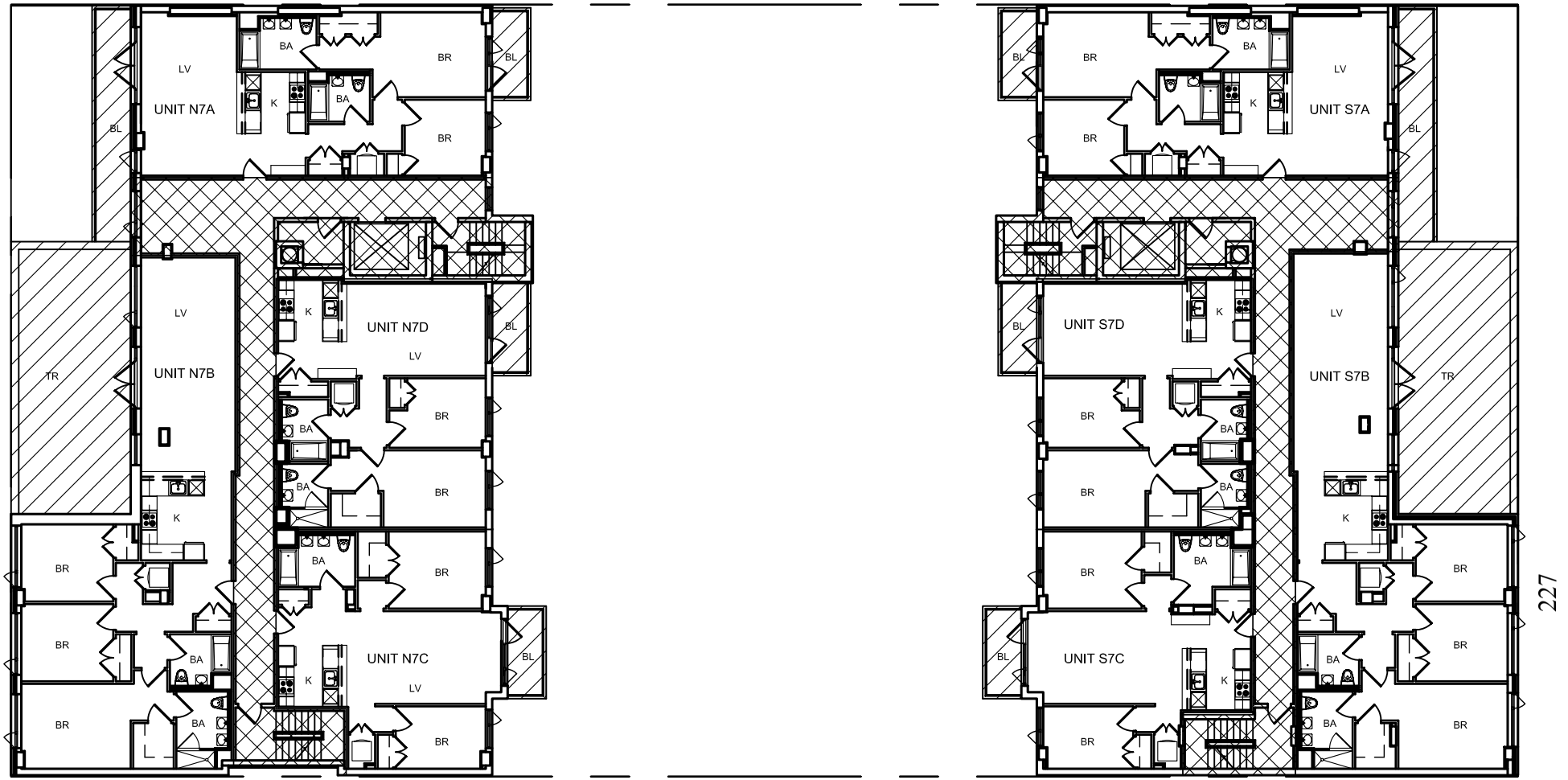

7TH FLOOR PLAN

0 16'

1' 8' 24'

N

LEGEND

- Units
- C.E. - General Common Element
- R.C.E. - Residential Common Element
- L.C.E. - Limited Common Element for Residential

THE 37-14 34TH STREET CONDOMINIUM
37-14 34th STREET
LONG ISLAND CITY, NY 11101

The Unit Layout square footage and dimensions are approximate and subject to normal construction variances and tolerances, Square footages exceed the usable floor area. This floor plan is based on construction drawings, minor inaccuracies between this floor plan and the actual Unit layout when built will not excuse a purchaser from completing the purchase of a Unit without abatement in price and without recourse against the Sponsor. Sponsor reserves the right to make changes in accordance with the Offering Plan.

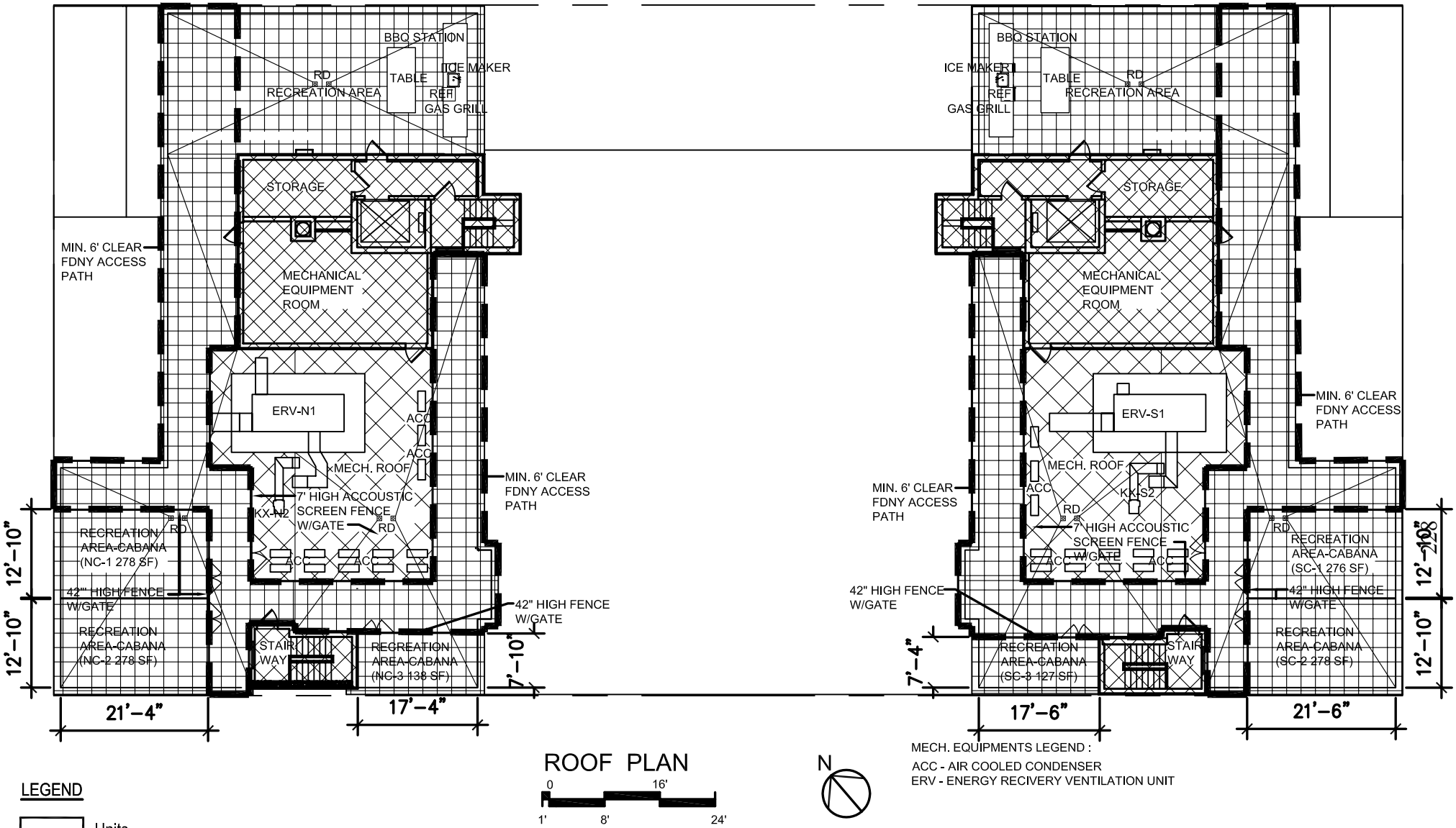

ROOF PLAN

0 16'

1' 8' 24'

N

MECH. EQUIPMENTS LEGEND :

ACC - AIR COOLED CONDENSER

ERV - ENERGY RECIVERY VENTILATION UNIT

LEGEND

- Units
- C.E. - General Common Element
- R.C.E. - Residential Common Element
- L.C.E. - Limited Common Element for Residential

THE 37-14 34TH STREET CONDOMINIUM
37-14 34th STREET
LONG ISLAND CITY, NY 11101

The Unit Layout square footage and dimensions are approximate and subject to normal construction variances and tolerances, Square footages exceed the usable floor area. This floor plan is based on construction drawings, minor inaccuracies between this floor plan and the actual Unit layout when built will not excuse a purchaser from completing the purchase of a Unit without abatement in price and without recourse against the Sponsor. Sponsor reserves the right to make changes in accordance with the Offering Plan.

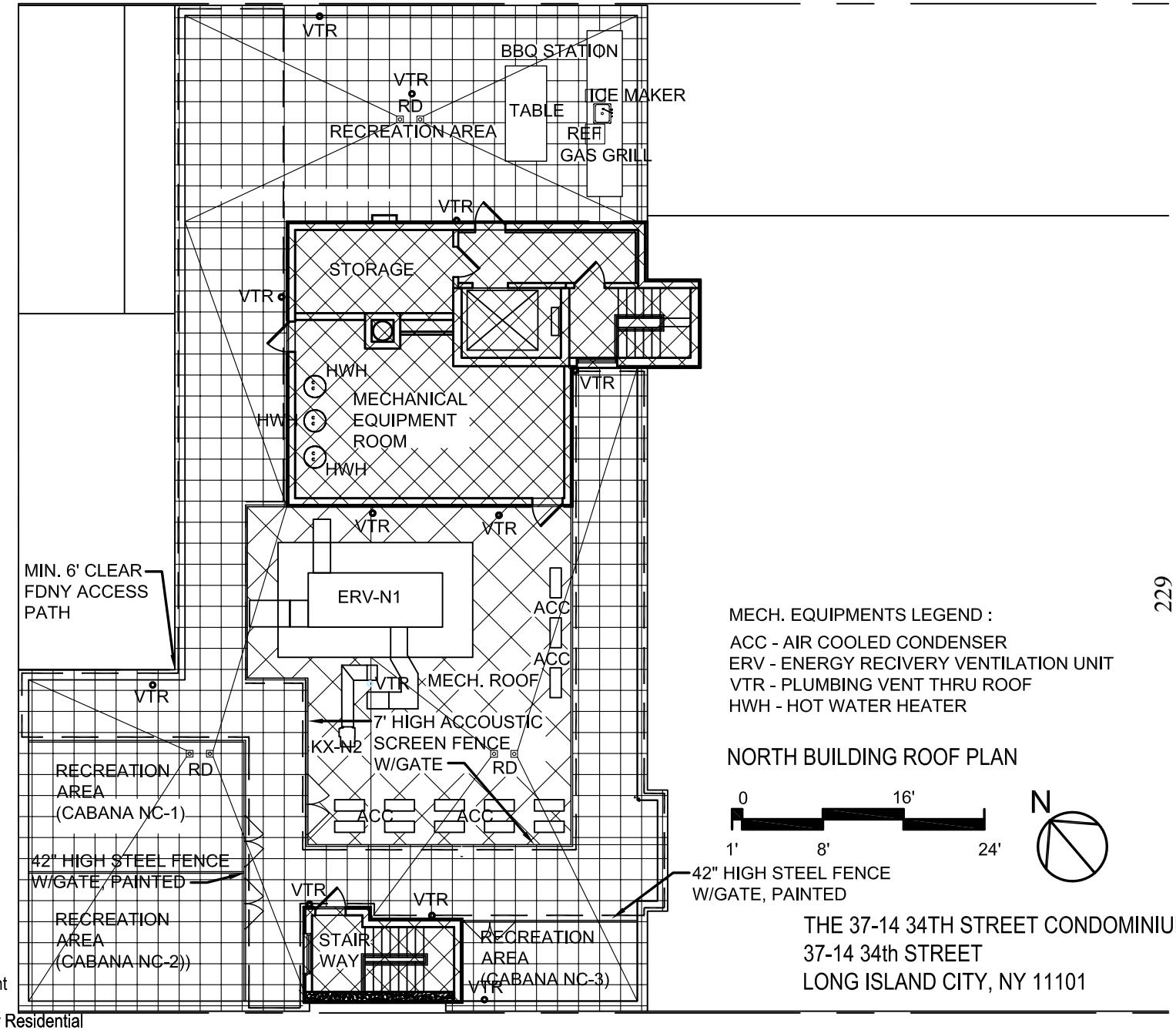

KEY PLAN

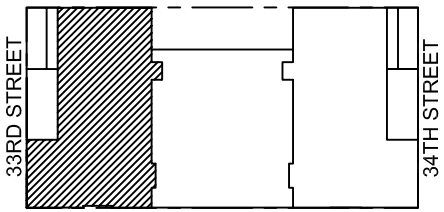

LEGEND

- Units
- C.E. - General Common Element
- R.C.E. - Residential Common Element
- L.C.E. - Limited Common Element for Residential

MECH. EQUIPMENTS LEGEND :

ACC - AIR COOLED CONDENSER
ERV - ENERGY RECIVERY VENTILATION UNIT
VTR - PLUMBING VENT THRU ROOF
HWH - HOT WATER HEATER

NORTH BUILDING ROOF PLAN

0 16'
1' 8' 24'

N

THE 37-14 34TH STREET CONDOMINIUM
37-14 34th STREET
LONG ISLAND CITY, NY 11101

229

The Unit Layout square footage and dimensions are approximate and subject to normal construction variances and tolerances, Square footages exceed the usable floor area. This floor plan is based on construction drawings, minor inaccuracies between this floor plan and the actual Unit layout when built will not excuse a purchaser from completing the purchase of a Unit without abatement in price and without recourse against the Sponsor. Sponsor reserves the right to make changes in accordance with the Offering Plan.

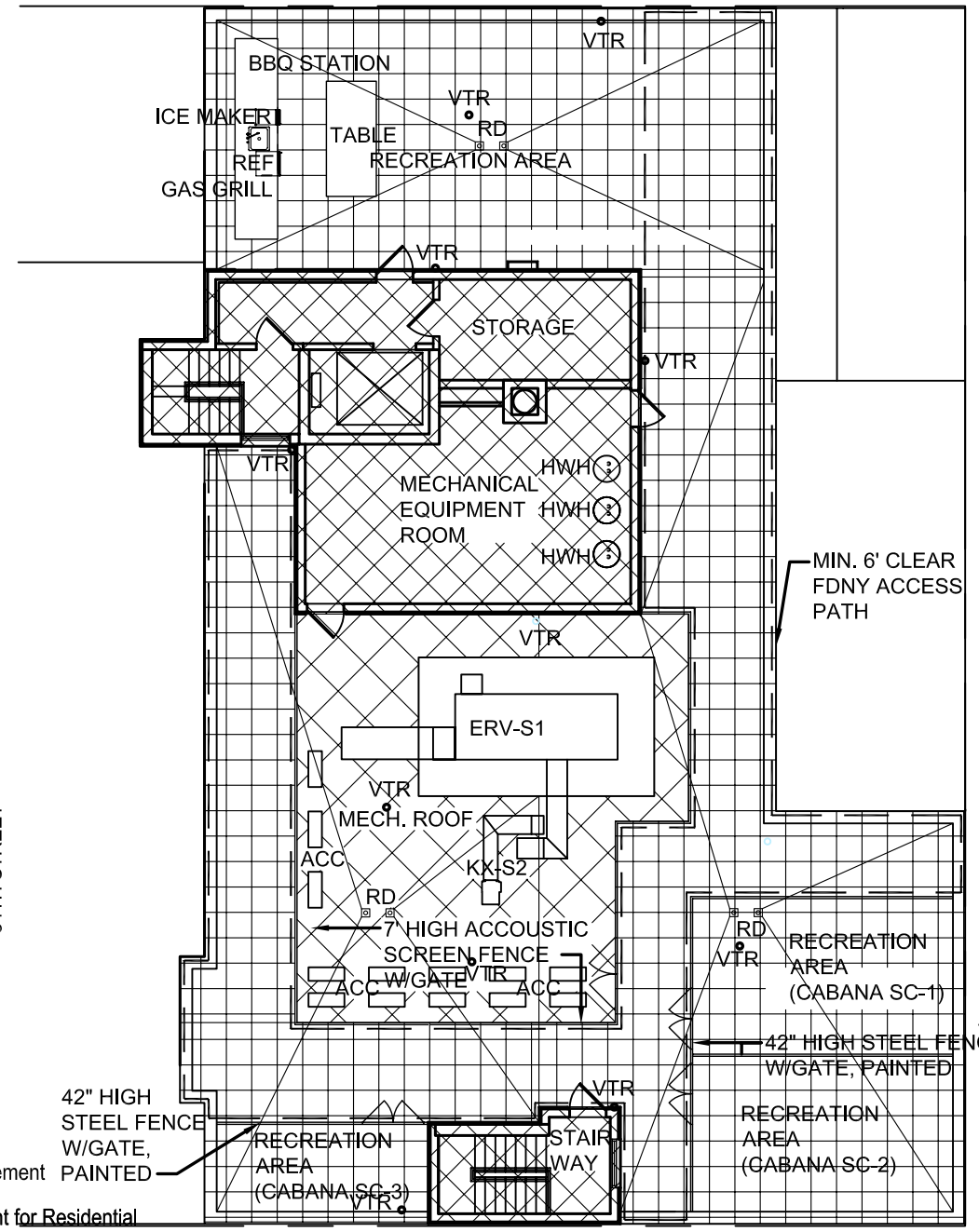

KEY PLAN

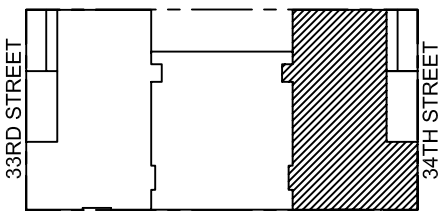

LEGEND

- Units
- C.E. - General Common Element
- R.C.E. - Residential Common Element
- L.C.E. - Limited Common Element for Residential

MECH. EQUIPMENTS LEGEND :

ACC - AIR COOLED CONDENSER
ERV - ENERGY RECIVERY VENTILATION UNIT
VTR - PLUMBING VENT THRU ROOF
HWH - HOT WATER HEATER

SOUTH BUILDING ROOF PLAN

0 16'
1' 8' 24'

N

THE 37-14 34TH STREET CONDOMINIUM
37-14 34th STREET
LONG ISLAND CITY, NY 11101

230

The Unit Layout square footage and dimensions are approximate and subject to normal construction variances and tolerances, Square footages exceed the usable floor area. This floor plan is based on construction drawings, minor inaccuracies between this floor plan and the actual Unit layout when built will not excuse a purchaser from completing the purchase of a Unit without abatement in price and without recourse against the Sponsor. Sponsor reserves the right to make changes in accordance with the Offering Plan.

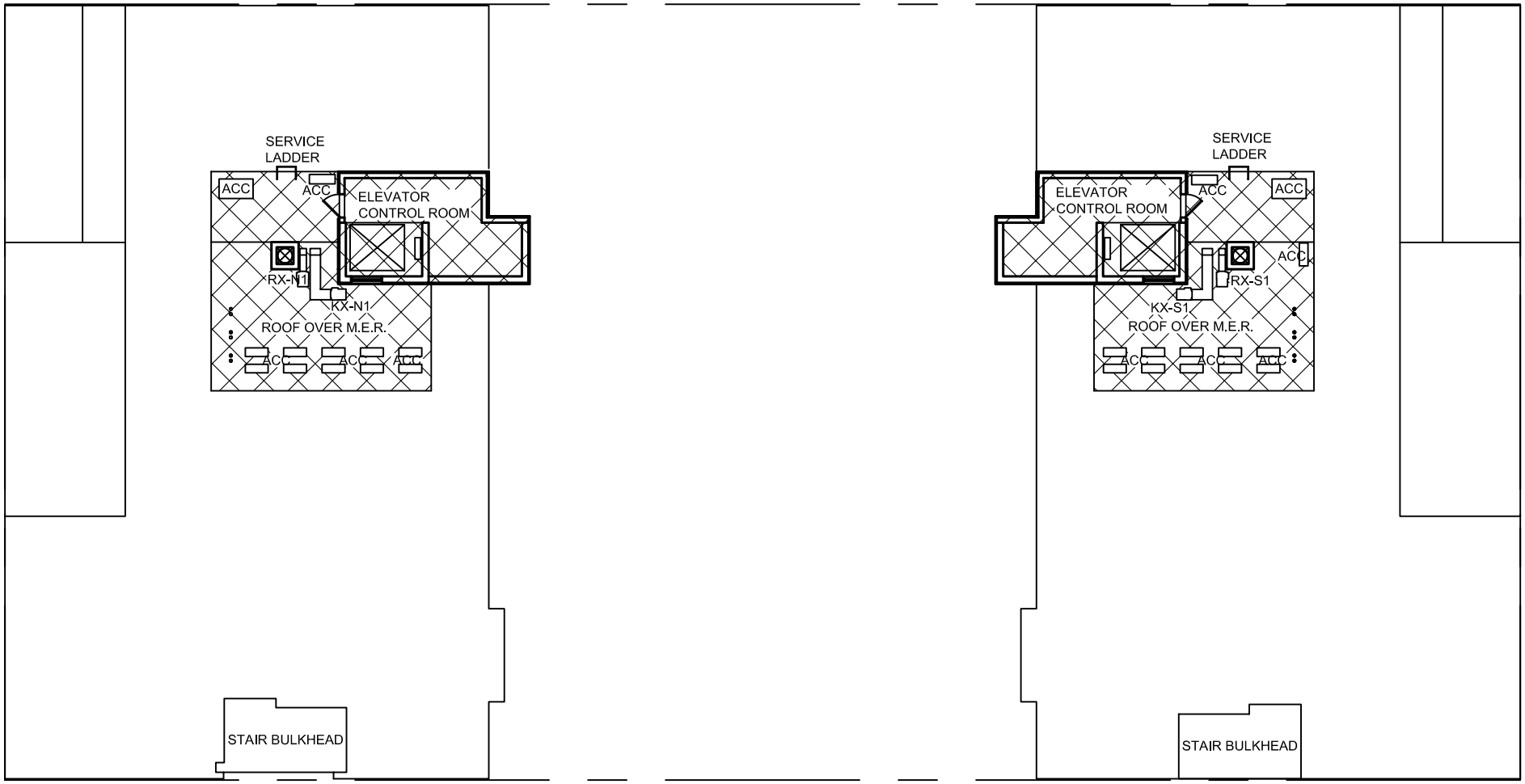

ROOF BULKHEAD PLAN

N

0 16'

1' 8' 24'

MECH. EQUIPMENTS LEGEND :
ACC - AIR COOLED CONDENSER
KX - KITCHEN EXHAUST FAN
RX - REFUSE COMPACTOR ROOM EXHAUST FAN

LEGEND

- Units
- C.E. - General Common Element
- R.C.E. - Residential Common Element
- L.C.E. - Limited Common Element for Residential

THE 37-14 34TH STREET CONDOMINIUM
37-14 34th STREET
LONG ISLAND CITY, NY 11101

The Unit Layout square footage and dimensions are approximate and subject to normal construction variances and tolerances, Square footages exceed the usable floor area. This floor plan is based on construction drawings, minor inaccuracies between this floor plan and the actual Unit layout when built will not excuse a purchaser from completing the purchase of a Unit without abatement in price and without recourse against the Sponsor. Sponsor reserves the right to make changes in accordance with the Offering Plan.

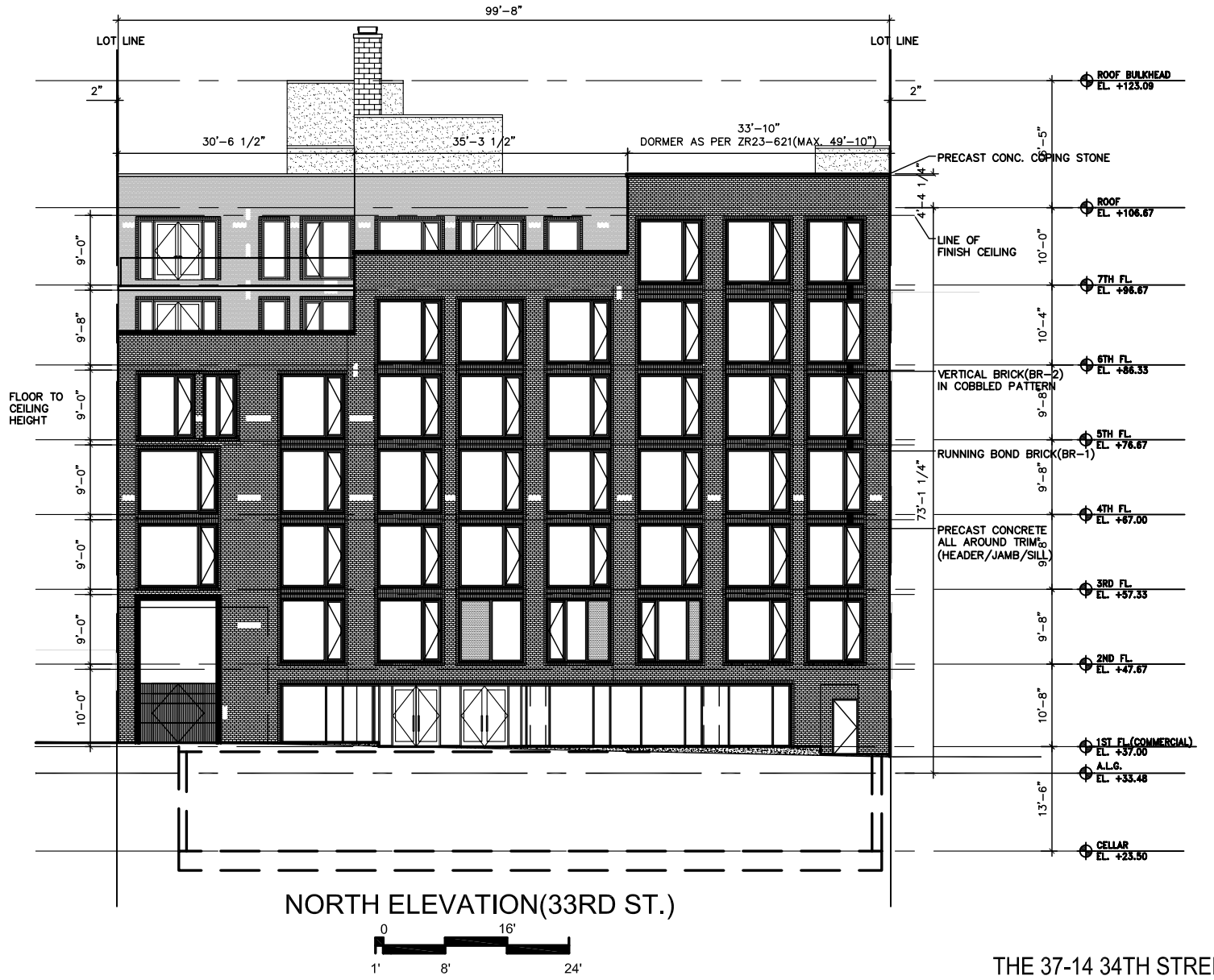

NORTH ELEVATION(33RD ST.)

0 16'

1' 8' 24'

THE 37-14 34TH STREET CONDOMINIUM
37-14 34th STREET
LONG ISLAND CITY, NY 11101

The Unit Layout square footage and dimensions are approximate and subject to normal construction variances and tolerances, Square footages exceed the usable floor area. This floor plan is based on construction drawings, minor inaccuracies between this floor plan and the actual Unit layout when built will not excuse a purchaser from completing the purchase of a Unit without abatement in price and without recourse against the Sponsor. Sponsor reserves the right to make changes in accordance with the Offering Plan.

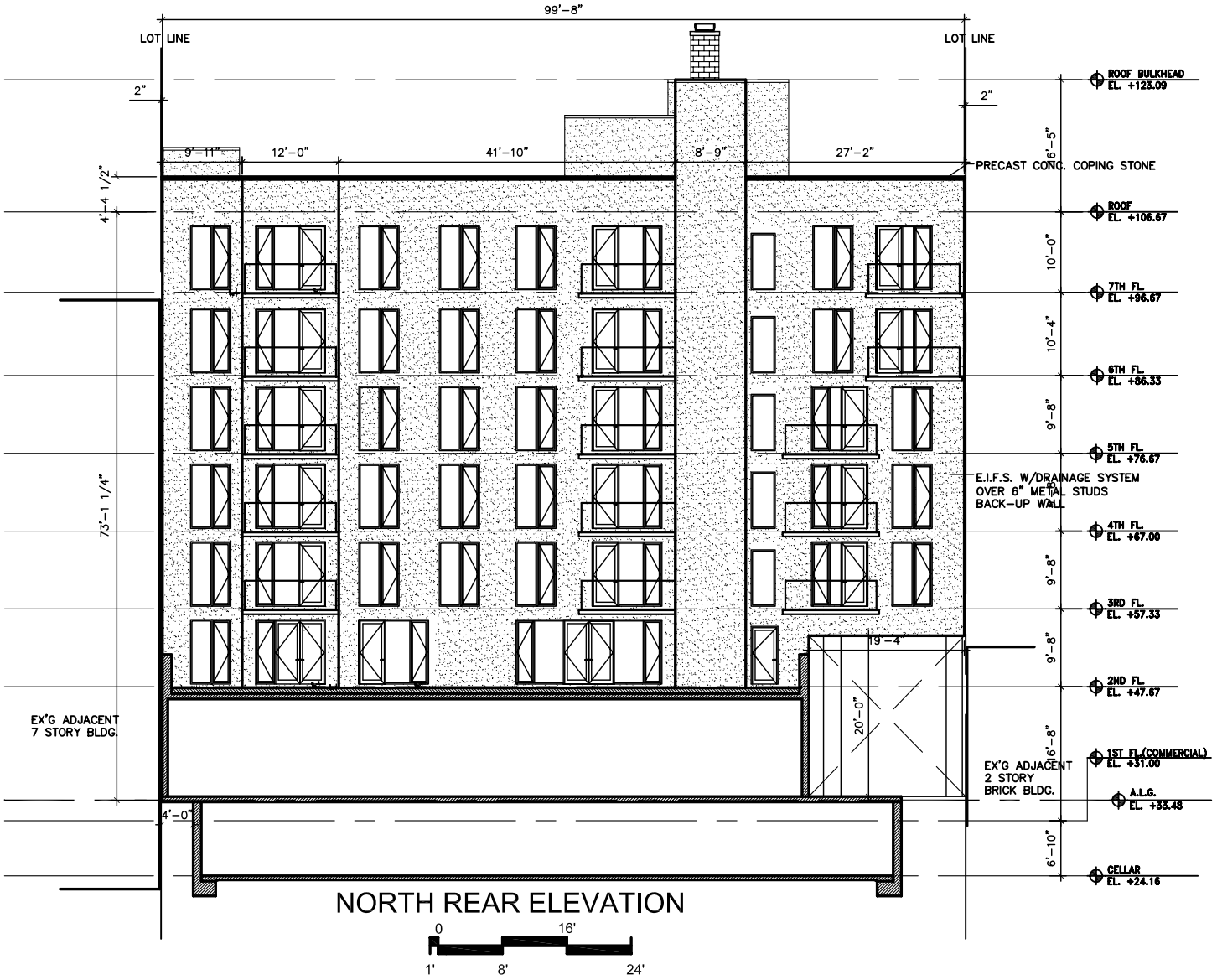

THE 37-14 34TH STREET CONDOMINIUM
37-14 34th STREET
LONG ISLAND CITY, NY 11101

The Unit Layout square footage and dimensions are approximate and subject to normal construction variances and tolerances, Square footages exceed the usable floor area. This floor plan is based on construction drawings, minor inaccuracies between this floor plan and the actual Unit layout when built will not excuse a purchaser from completing the purchase of a Unit without abatement in price and without recourse against the Sponsor. Sponsor reserves the right to make changes in accordance with the Offering Plan.

SOUTH ELEVATION(34TH ST.)

0 16'

1' 8' 24'

THE 37-14 34TH STREET CONDOMINIUM
37-14 34th STREET
LONG ISLAND CITY, NY 11101

The Unit Layout square footage and dimensions are approximate and subject to normal construction variances and tolerances, Square footages exceed the usable floor area. This floor plan is based on construction drawings, minor inaccuracies between this floor plan and the actual Unit layout when built will not excuse a purchaser from completing the purchase of a Unit without abatement in price and without recourse against the Sponsor. Sponsor reserves the right to make changes in accordance with the Offering Plan.

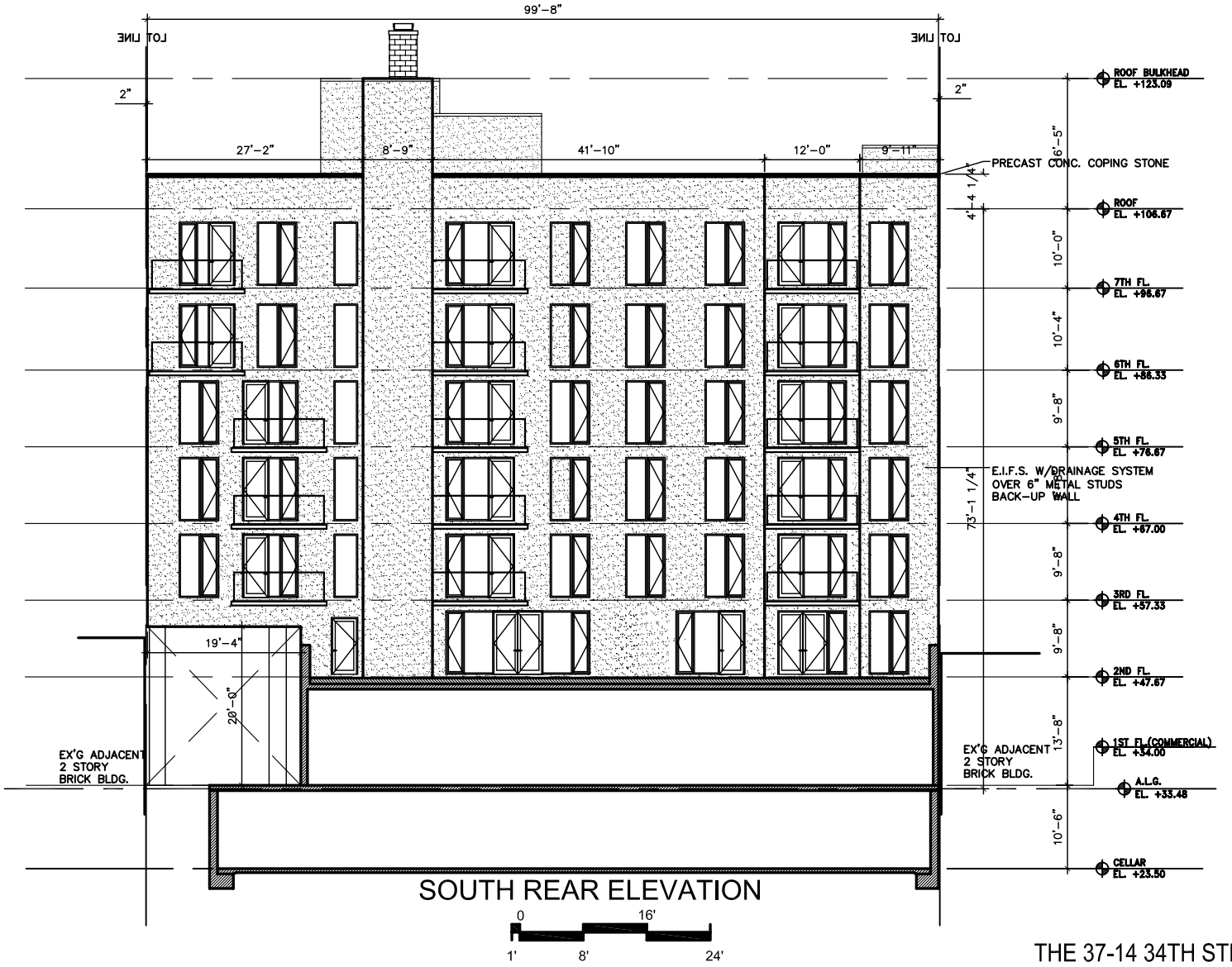

THE 37-14 34TH STREET CONDOMINIUM
37-14 34th STREET
LONG ISLAND CITY, NY 11101

The Unit Layout square footage and dimensions are approximate and subject to normal construction variances and tolerances, Square footages exceed the usable floor area. This floor plan is based on construction drawings, minor inaccuracies between this floor plan and the actual Unit layout when built will not excuse a purchaser from completing the purchase of a Unit without abatement in price and without recourse against the Sponsor. Sponsor reserves the right to make changes in accordance with the Offering Plan.

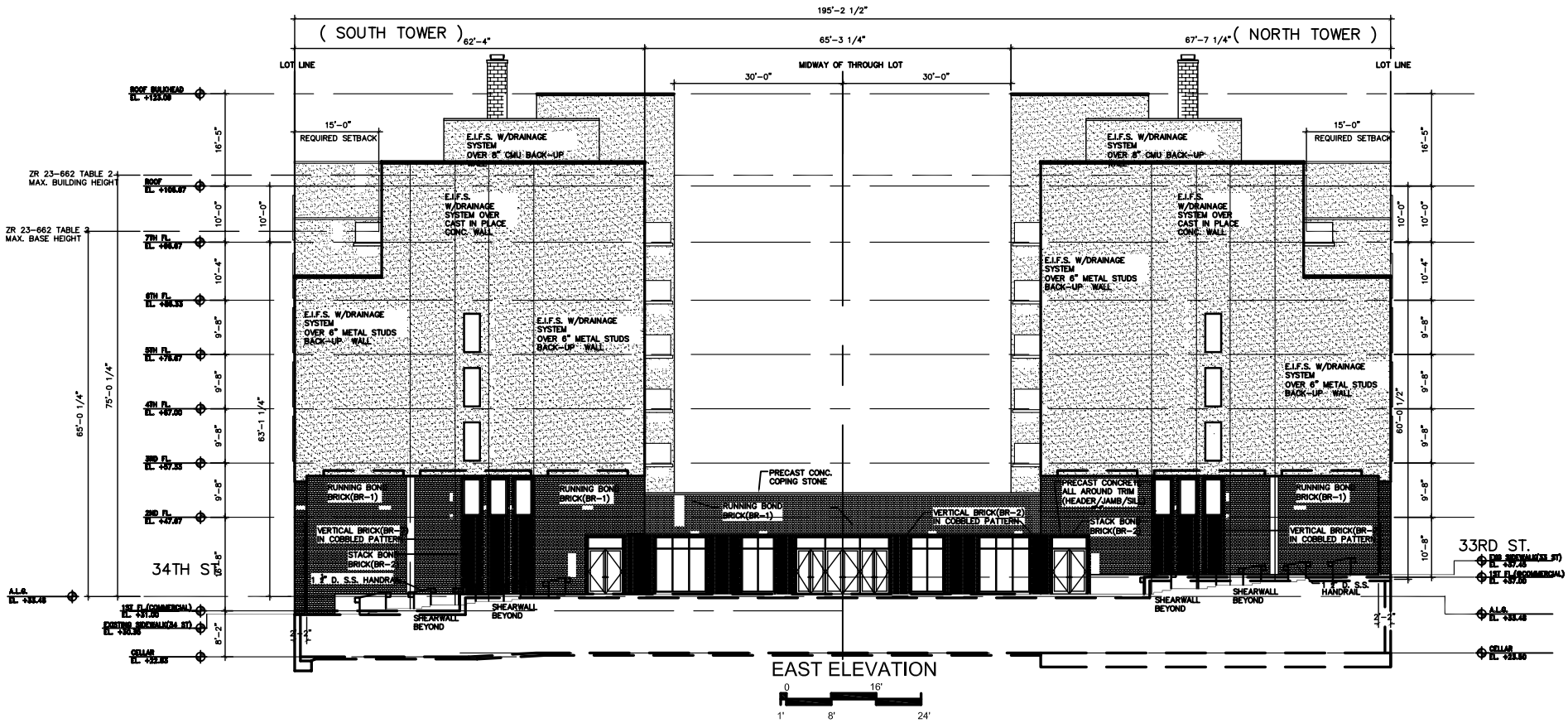

THE 37-14 34TH STREET CONDOMINIUM
37-14 34th STREET
LONG ISLAND CITY, NY 11101

The Unit Layout square footage and dimensions are approximate and subject to normal construction variances and tolerances, Square footages exceed the usable floor area. This floor plan is based on construction drawings, minor inaccuracies between this floor plan and the actual Unit layout when built will not excuse a purchaser from completing the purchase of a Unit without abatement in price and without recourse against the Sponsor. Sponsor reserves the right to make changes in accordance with the Offering Plan.

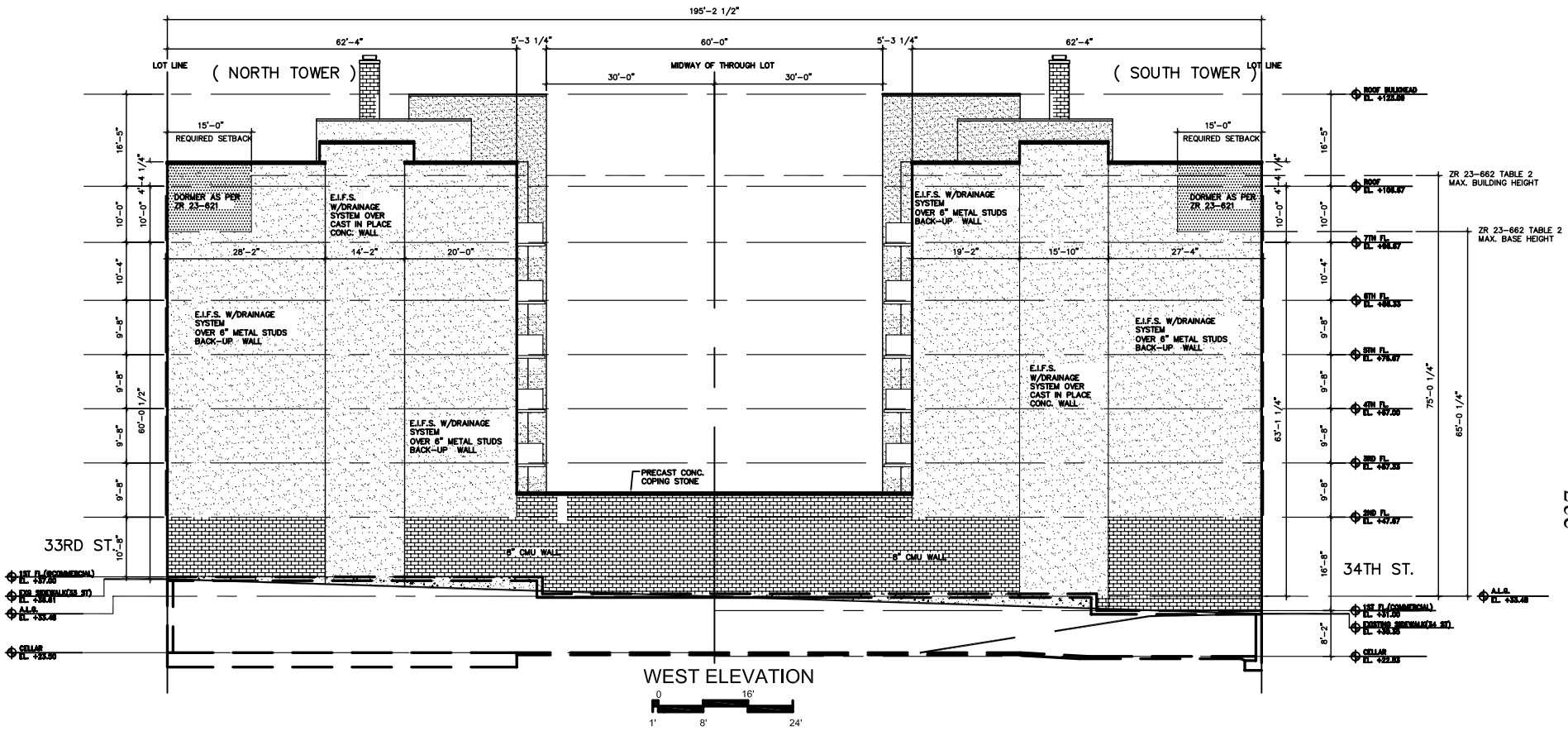

WEST ELEVATION

237

THE 37-14 34TH STREET CONDOMINIUM
37-14 34th STREET
LONG ISLAND CITY, NY 11101

The Unit Layout square footage and dimensions are approximate and subject to normal construction variances and tolerances, Square footages exceed the usable floor area. This floor plan is based on construction drawings, minor inaccuracies between this floor plan and the actual Unit layout when built will not excuse a purchaser from completing the purchase of a Unit without abatement in price and without recourse against the Sponsor. Sponsor reserves the right to make changes in accordance with the Offering Plan.

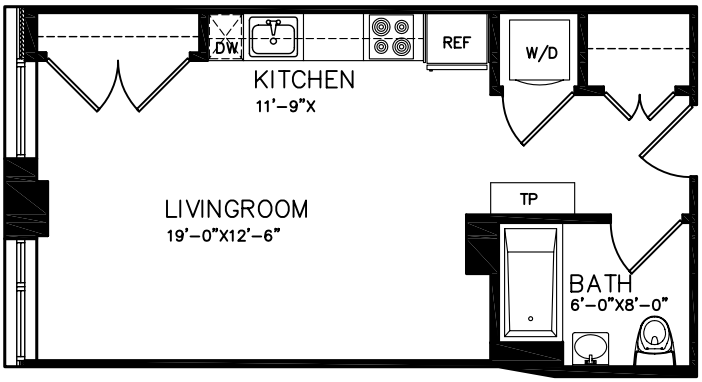

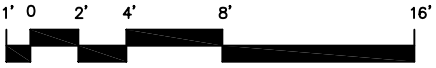

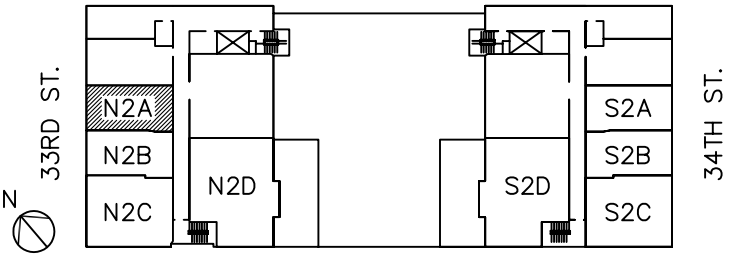

THE 37-14 34TH STREET CONDOMINIUM
37-14 34th STREET
LONG ISLAND CITY, NY 11101

RESIDENCE N2A

FLOOR : 2
LIVINGROOM
1 BATHROOM

INTERIOR : 435.5 SF
UNIT TOTAL : 435.5 SF

LEGEND :
DW - DISHWASHER
REF - REFRIGERATOR
TP - TALL PANTRY
W/D - WASHER / DRYER

The Unit Layout square footage and dimensions are approximate and subject to normal construction variances and tolerances, Square footages exceed the usable floor area. This floor plan is based on construction drawings, minor inaccuracies between this floor plan and the actual Unit layout when built will not excuse a purchaser from completing the purchase of a Unit without abatement in price and without recourse against the Sponsor. Sponsor reserves the right to make changes in accordance with the Offering Plan.

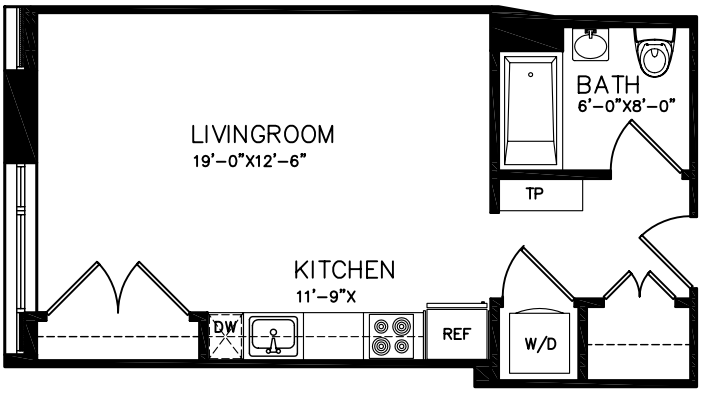

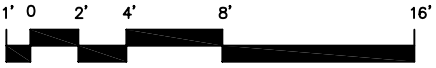

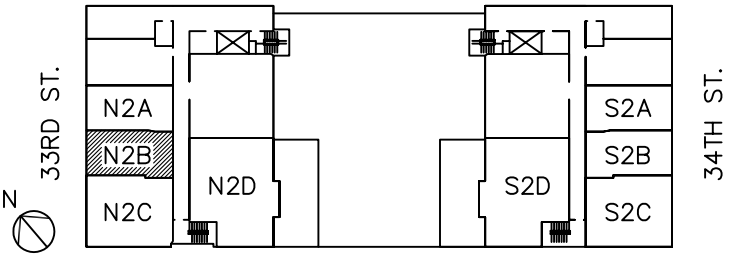

LEGEND :
DW – DISHWASHER
REF – REFRIGERATOR
TP – TALL PANTRY
W/D – WASHER / DRYER

THE 37–14 34TH STREET CONDOMINIUM
37–14 34th STREET
LONG ISLAND CITY, NY 11101

RESIDENCE N2B

FLOOR : 2
LIVINGROOM
1 BATHROOM

INTERIOR : 437.2 SF
UNIT TOTAL : 437.2 SF

The Unit Layout square footage and dimensions are approximate and subject to normal construction variances and tolerances, Square footages exceed the usable floor area. This floor plan is based on construction drawings, minor inaccuracies between this floor plan and the actual Unit layout when built will not excuse a purchaser from completing the purchase of a Unit without abatement in price and without recourse against the Sponsor. Sponsor reserves the right to make changes in accordance with the Offering Plan.

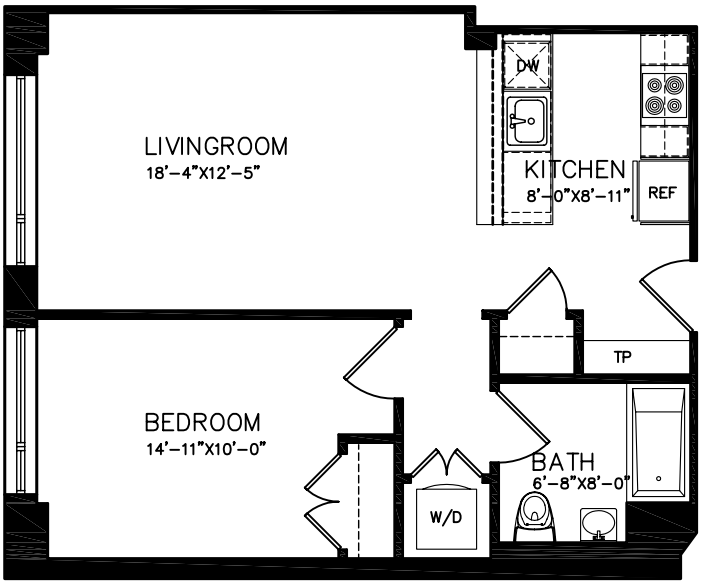

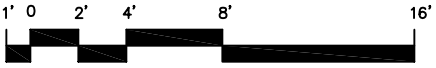

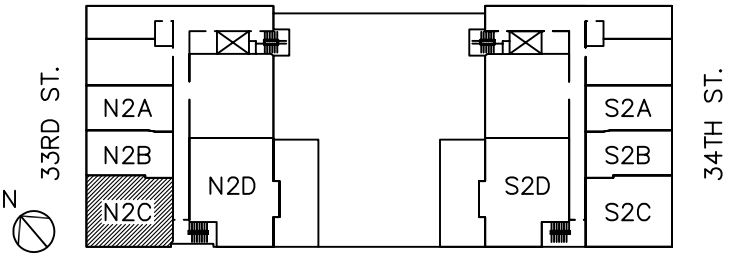

LEGEND :
DW – DISHWASHER
REF – REFRIGERATOR
TP – TALL PANTRY
W/D – WASHER / DRYER

THE 37-14 34TH STREET CONDOMINIUM
37-14 34th STREET
LONG ISLAND CITY, NY 11101

RESIDENCE N2C

FLOOR : 2
LIVINGROOM
1 BEDROOM
1 BATHROOM

INTERIOR : 678.6 SF
UNIT TOTAL : 678.6 SF

The Unit Layout square footage and dimensions are approximate and subject to normal construction variances and tolerances, Square footages exceed the usable floor area. This floor plan is based on construction drawings, minor inaccuracies between this floor plan and the actual Unit layout when built will not excuse a purchaser from completing the purchase of a Unit without abatement in price and without recourse against the Sponsor. Sponsor reserves the right to make changes in accordance with the Offering Plan.

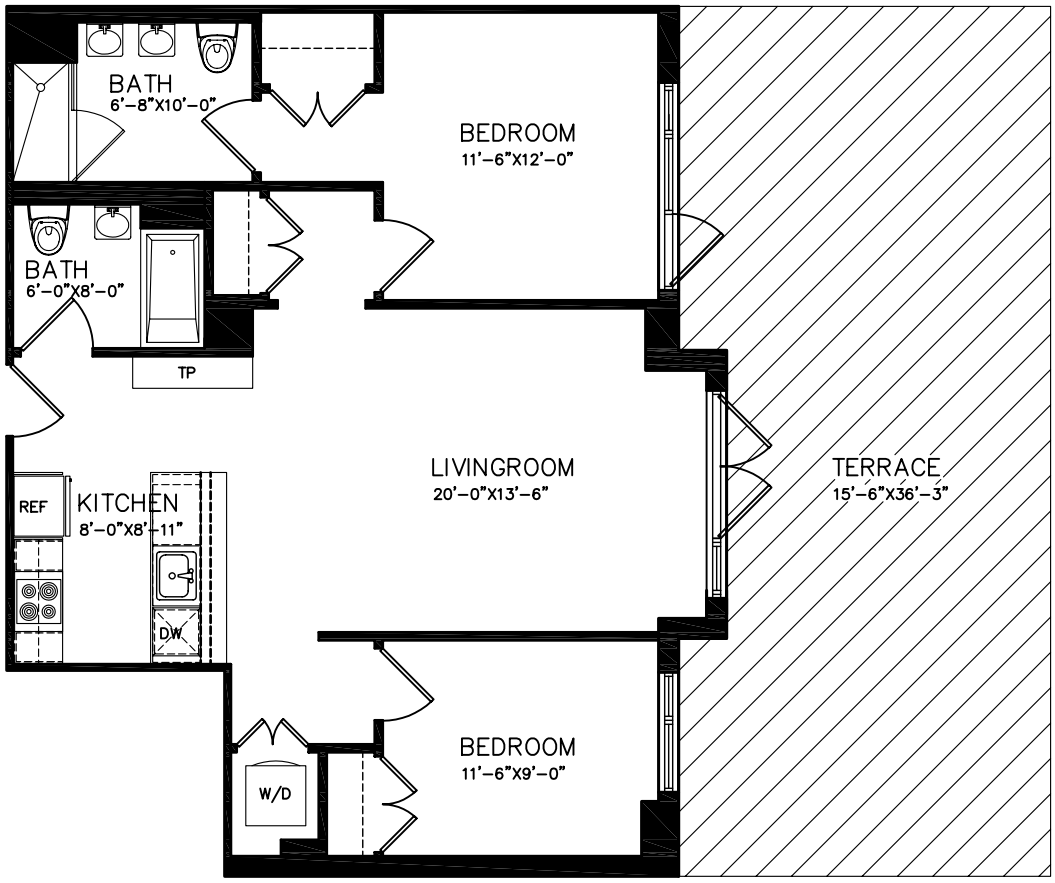

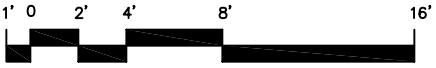

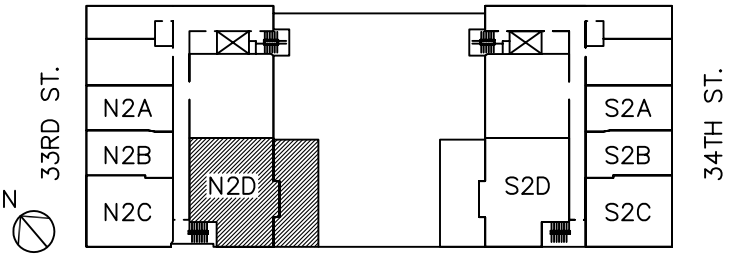

LEGEND :
DW – DISHWASHER
REF – REFRIGERATOR
TP – TALL PANTRY
W/D – WASHER / DRYER

THE 37-14 34TH STREET CONDOMINIUM
37-14 34th STREET
LONG ISLAND CITY, NY 11101

RESIDENCE N2D

FLOOR : 2
LIVINGROOM
2 BEDROOMS
2 BATHROOMS
TERRACE

INTERIOR : 961.0 SF
TERRACE : 537.8 SF
UNIT TOTAL : 1,498.8 SF

The Unit Layout square footage and dimensions are approximate and subject to normal construction variances and tolerances, Square footages exceed the usable floor area. This floor plan is based on construction drawings, minor inaccuracies between this floor plan and the actual Unit layout when built will not excuse a purchaser from completing the purchase of a Unit without abatement in price and without recourse against the Sponsor. Sponsor reserves the right to make changes in accordance with the Offering Plan.

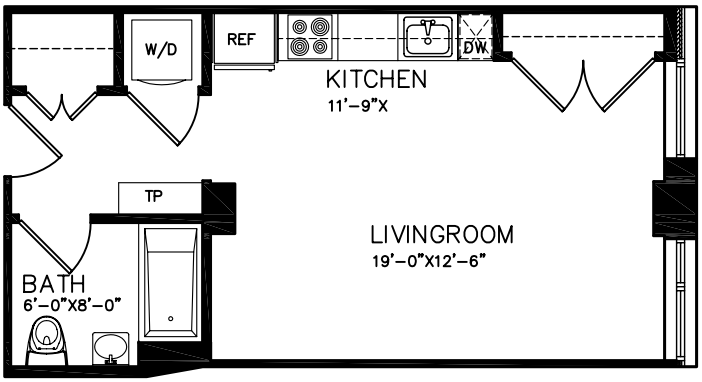

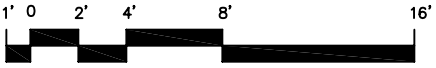

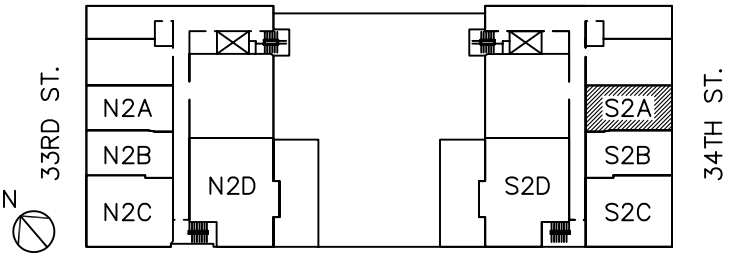

LEGEND :
DW – DISHWASHER
REF – REFRIGERATOR
TP – TALL PANTRY
W/D – WASHER / DRYER

THE 37-14 34TH STREET CONDOMINIUM
37-14 34th STREET
LONG ISLAND CITY, NY 11101

RESIDENCE S2A

FLOOR : 2
LIVINGROOM
1 BATHROOM

INTERIOR : 435.5 SF
UNIT TOTAL : 435.5 SF

The Unit Layout square footage and dimensions are approximate and subject to normal construction variances and tolerances, Square footages exceed the usable floor area. This floor plan is based on construction drawings, minor inaccuracies between this floor plan and the actual Unit layout when built will not excuse a purchaser from completing the purchase of a Unit without abatement in price and without recourse against the Sponsor. Sponsor reserves the right to make changes in accordance with the Offering Plan.

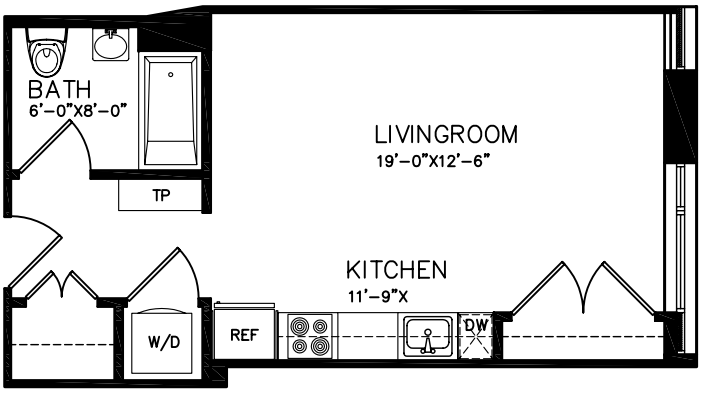

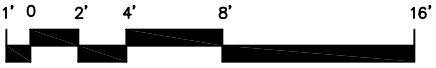

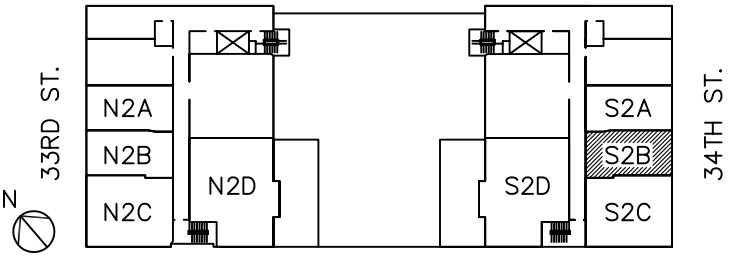

LEGEND :
DW – DISHWASHER
REF – REFRIGERATOR
TP – TALL PANTRY
W/D – WASHER / DRYER

THE 37–14 34TH STREET CONDOMINIUM
37–14 34th STREET
LONG ISLAND CITY, NY 11101

RESIDENCE S2B

FLOOR : 2
LIVINGROOM
1 BATHROOM

INTERIOR : 437.2 SF
UNIT TOTAL : 437.2 SF

The Unit Layout square footage and dimensions are approximate and subject to normal construction variances and tolerances, Square footages exceed the usable floor area. This floor plan is based on construction drawings, minor inaccuracies between this floor plan and the actual Unit layout when built will not excuse a purchaser from completing the purchase of a Unit without abatement in price and without recourse against the Sponsor. Sponsor reserves the right to make changes in accordance with the Offering Plan.

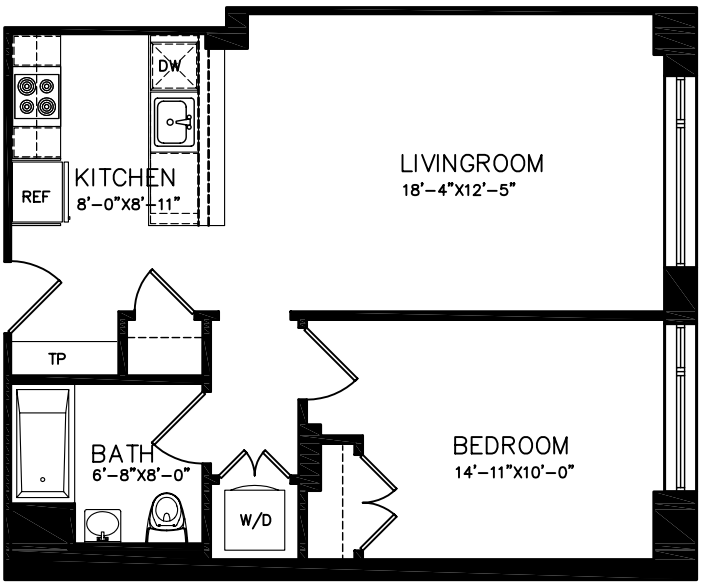

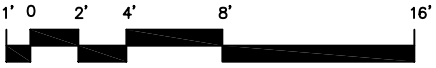

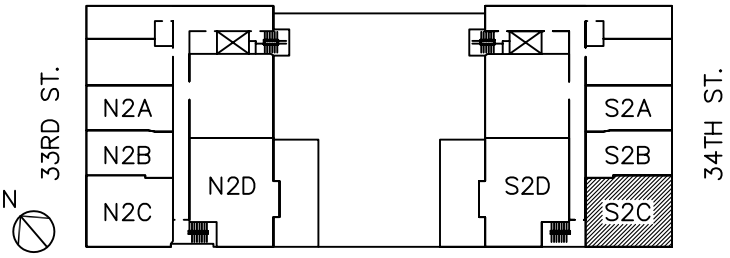

LEGEND :
DW – DISHWASHER
REF – REFRIGERATOR
TP – TALL PANTRY
W/D – WASHER / DRYER

THE 37-14 34TH STREET CONDOMINIUM
37-14 34th STREET
LONG ISLAND CITY, NY 11101

RESIDENCE S2C

FLOOR : 2
LIVINGROOM
1 BEDROOM
1 BATHROOM

INTERIOR : 679.5 SF
UNIT TOTAL : 679.5 SF

The Unit Layout square footage and dimensions are approximate and subject to normal construction variances and tolerances, Square footages exceed the usable floor area. This floor plan is based on construction drawings, minor inaccuracies between this floor plan and the actual Unit layout when built will not excuse a purchaser from completing the purchase of a Unit without abatement in price and without recourse against the Sponsor. Sponsor reserves the right to make changes in accordance with the Offering Plan.

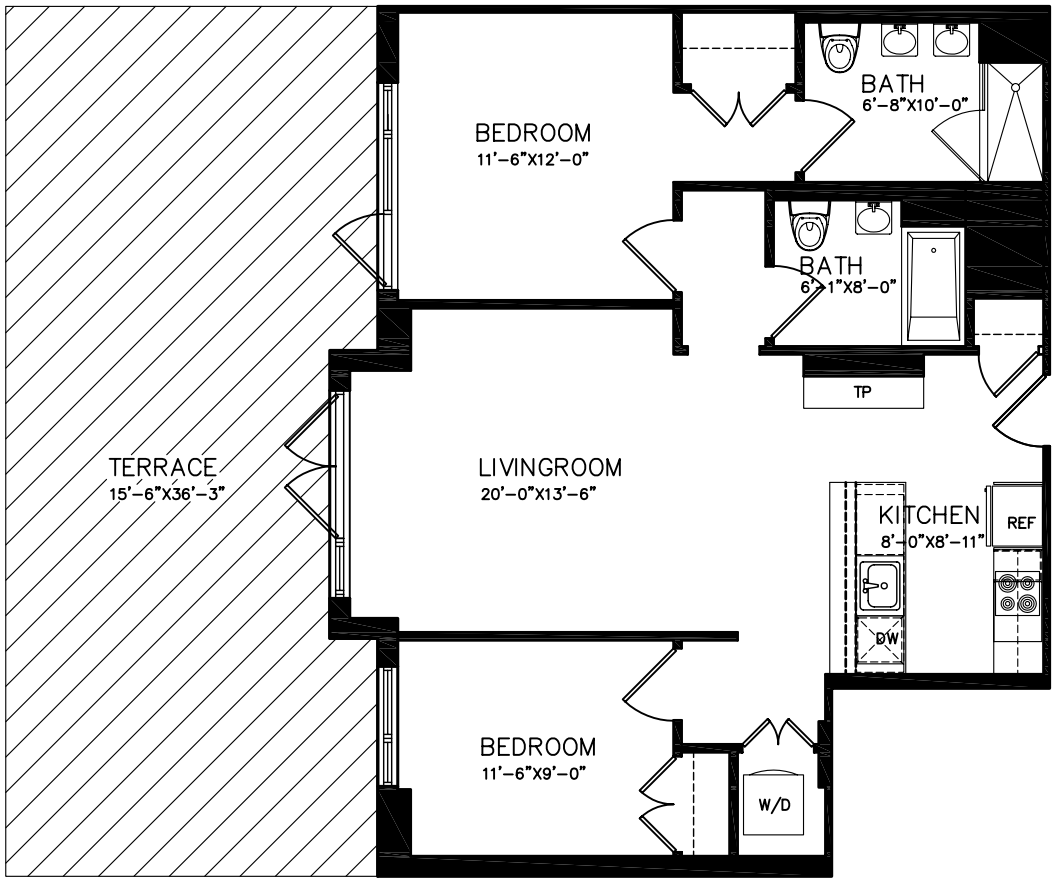

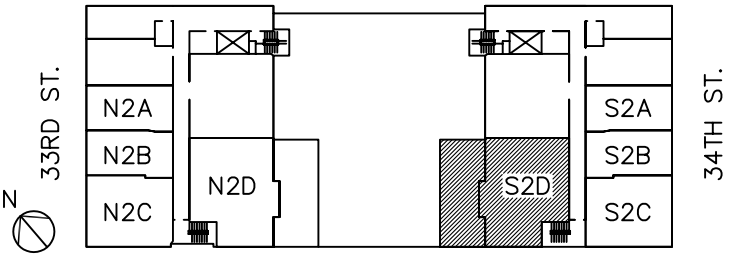

LEGEND :
DW – DISHWASHER
REF – REFRIGERATOR
TP – TALL PANTRY
W/D – WASHER / DRYER

THE 37-14 34TH STREET CONDOMINIUM
37-14 34th STREET
LONG ISLAND CITY, NY 11101

RESIDENCE S2D

FLOOR : 2
LIVINGROOM
2 BEDROOMS
2 BATHROOMS
TERRACE

INTERIOR : 967.8 SF
TERRACE : 537.8 SF
UNIT TOTAL : 1,505.6 SF

The Unit Layout square footage and dimensions are approximate and subject to normal construction variances and tolerances, Square footages exceed the usable floor area. This floor plan is based on construction drawings, minor inaccuracies between this floor plan and the actual Unit layout when built will not excuse a purchaser from completing the purchase of a Unit without abatement in price and without recourse against the Sponsor. Sponsor reserves the right to make changes in accordance with the Offering Plan.

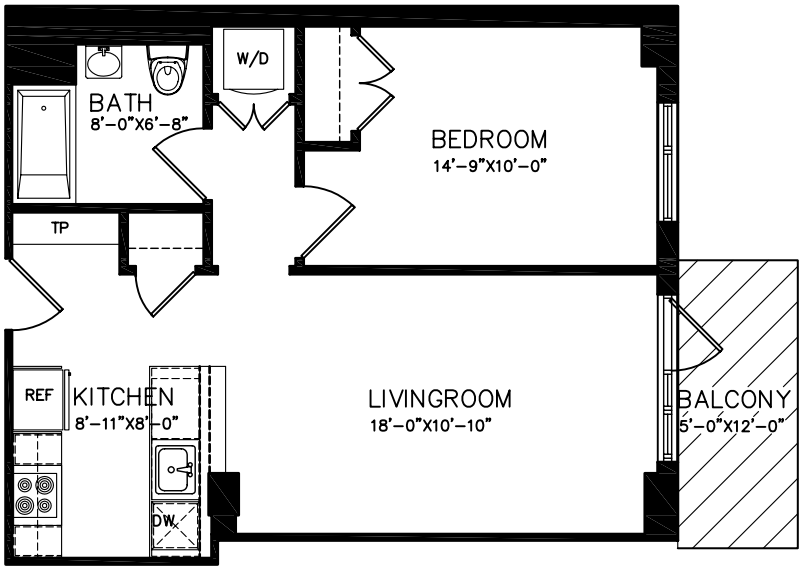

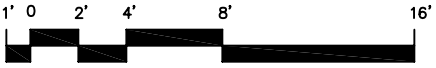

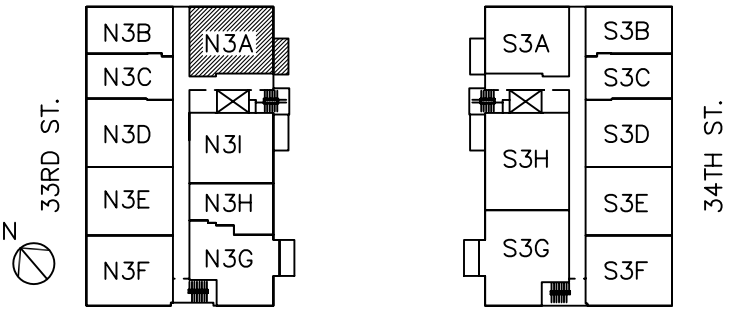

LEGEND :
DW – DISHWASHER
REF – REFRIGERATOR
TP – TALL PANTRY
W/D – WASHER / DRYER

THE 37–14 34TH STREET CONDOMINIUM
37–14 34th STREET
LONG ISLAND CITY, NY 11101

RESIDENCE N3A

FLOOR : 3
LIVINGROOM
1 BEDROOM
1 BATHROOM
BALCONY

INTERIOR : 631.8 SF
BALCONY : 60 SF
UNIT TOTAL : 691.8 SF

The Unit Layout square footage and dimensions are approximate and subject to normal construction variances and tolerances, Square footages exceed the usable floor area. This floor plan is based on construction drawings, minor inaccuracies between this floor plan and the actual Unit layout when built will not excuse a purchaser from completing the purchase of a Unit without abatement in price and without recourse against the Sponsor. Sponsor reserves the right to make changes in accordance with the Offering Plan.

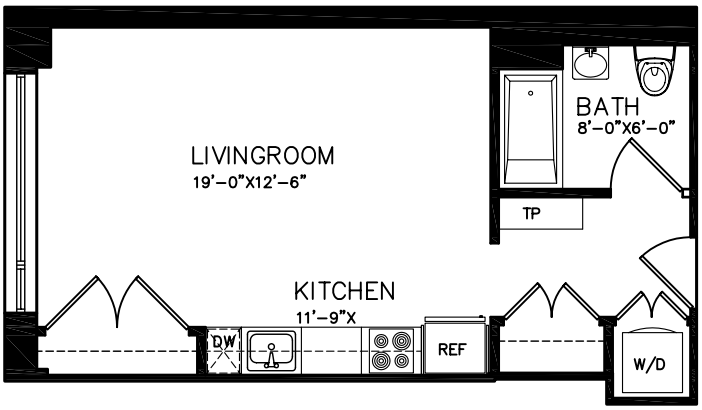

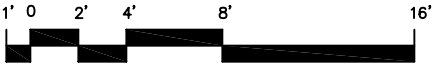

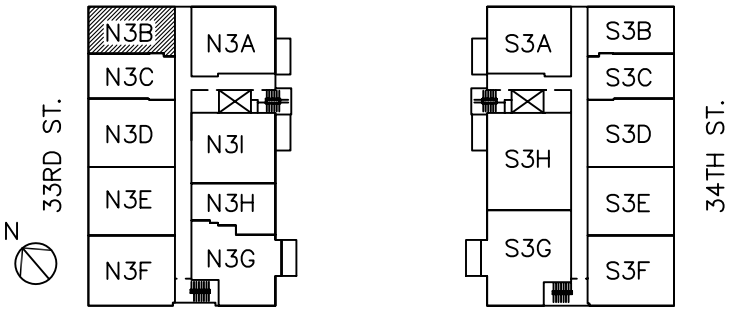

LEGEND :
DW – DISHWASHER
REF – REFRIGERATOR
TP – TALL PANTRY
W/D – WASHER / DRYER

THE 37–14 34TH STREET CONDOMINIUM
37–14 34th STREET
LONG ISLAND CITY, NY 11101

RESIDENCE N3B

FLOOR : 3
LIVINGROOM
1 BATHROOM

INTERIOR : 452.5 SF
UNIT TOTAL : 452.5 SF

The Unit Layout square footage and dimensions are approximate and subject to normal construction variances and tolerances, Square footages exceed the usable floor area. This floor plan is based on construction drawings, minor inaccuracies between this floor plan and the actual Unit layout when built will not excuse a purchaser from completing the purchase of a Unit without abatement in price and without recourse against the Sponsor. Sponsor reserves the right to make changes in accordance with the Offering Plan.

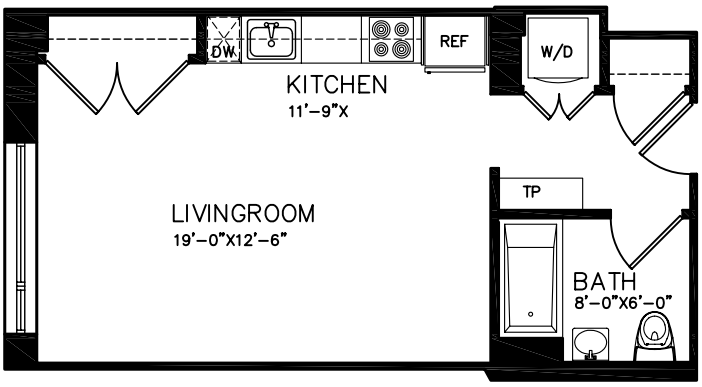

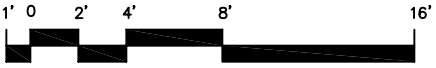

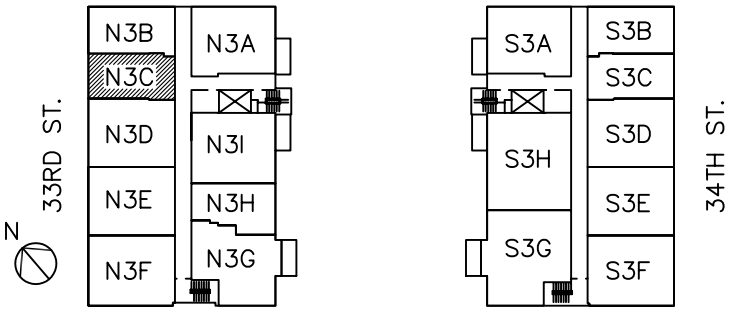

LEGEND :
DW – DISHWASHER
REF – REFRIGERATOR
TP – TALL PANTRY
W/D – WASHER / DRYER

THE 37–14 34TH STREET CONDOMINIUM
37–14 34th STREET
LONG ISLAND CITY, NY 11101

RESIDENCE N3C

FLOOR : 3
LIVINGROOM
1 BATHROOM

INTERIOR : 433.2 SF
UNIT TOTAL : 433.2 SF

The Unit Layout square footage and dimensions are approximate and subject to normal construction variances and tolerances, Square footages exceed the usable floor area. This floor plan is based on construction drawings, minor inaccuracies between this floor plan and the actual Unit layout when built will not excuse a purchaser from completing the purchase of a Unit without abatement in price and without recourse against the Sponsor. Sponsor reserves the right to make changes in accordance with the Offering Plan.

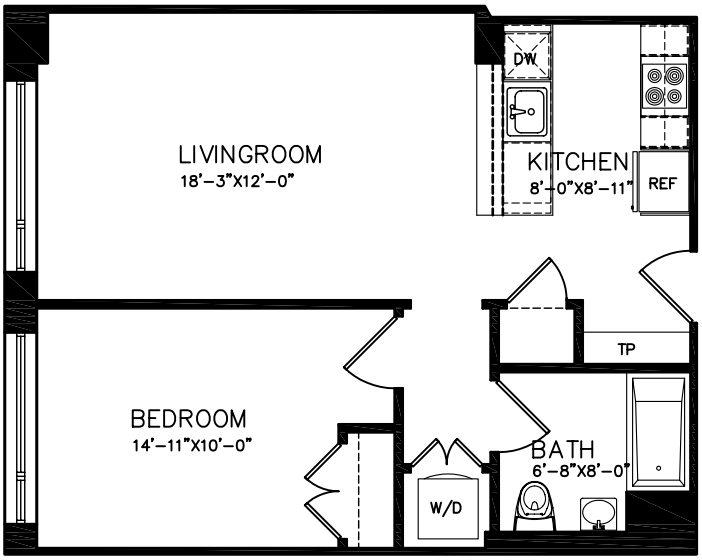

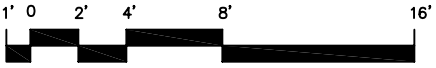

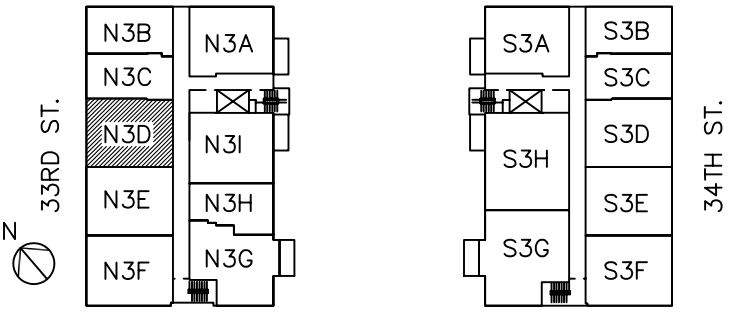

LEGEND :
DW – DISHWASHER
REF – REFRIGERATOR
TP – TALL PANTRY
W/D – WASHER / DRYER

THE 37–14 34TH STREET CONDOMINIUM
37–14 34th STREET
LONG ISLAND CITY, NY 11101

RESIDENCE N3D

FLOOR : 3
LIVINGROOM
1 BEDROOM
1 BATHROOM

INTERIOR : 654.3 SF
UNIT TOTAL : 654.3 SF

The Unit Layout square footage and dimensions are approximate and subject to normal construction variances and tolerances, Square footages exceed the usable floor area. This floor plan is based on construction drawings, minor inaccuracies between this floor plan and the actual Unit layout when built will not excuse a purchaser from completing the purchase of a Unit without abatement in price and without recourse against the Sponsor. Sponsor reserves the right to make changes in accordance with the Offering Plan.

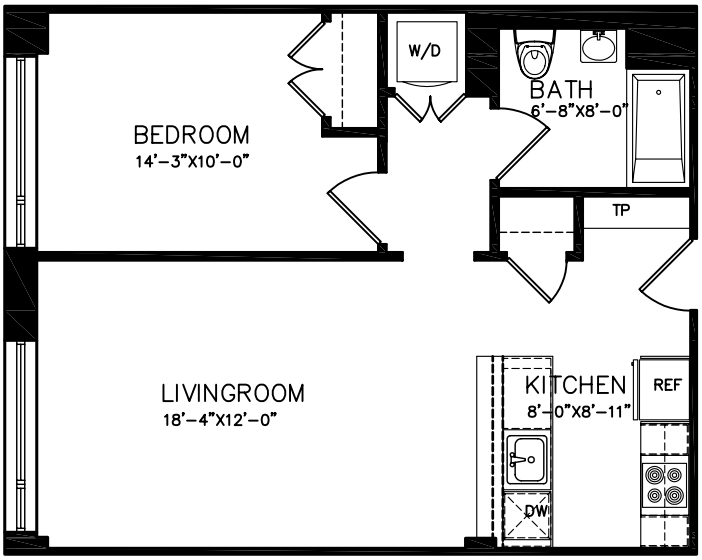

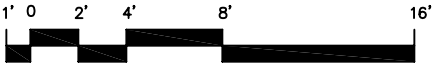

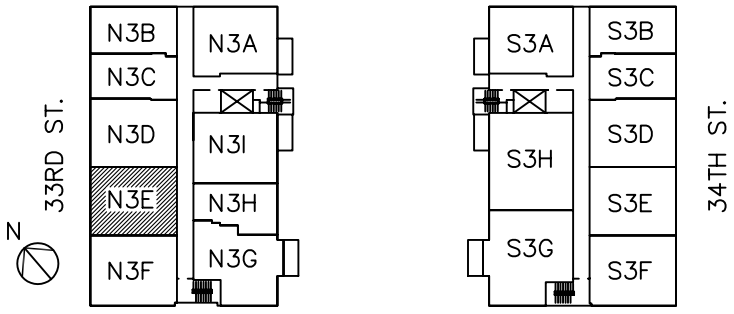

LEGEND :
DW – DISHWASHER
REF – REFRIGERATOR
TP – TALL PANTRY
W/D – WASHER / DRYER

THE 37–14 34TH STREET CONDOMINIUM
37–14 34th STREET
LONG ISLAND CITY, NY 11101

RESIDENCE N3E

FLOOR : 3
LIVINGROOM
1 BEDROOM
1 BATHROOM

INTERIOR : 658.3 SF
UNIT TOTAL : 658.3 SF

The Unit Layout square footage and dimensions are approximate and subject to normal construction variances and tolerances, Square footages exceed the usable floor area. This floor plan is based on construction drawings, minor inaccuracies between this floor plan and the actual Unit layout when built will not excuse a purchaser from completing the purchase of a Unit without abatement in price and without recourse against the Sponsor. Sponsor reserves the right to make changes in accordance with the Offering Plan.

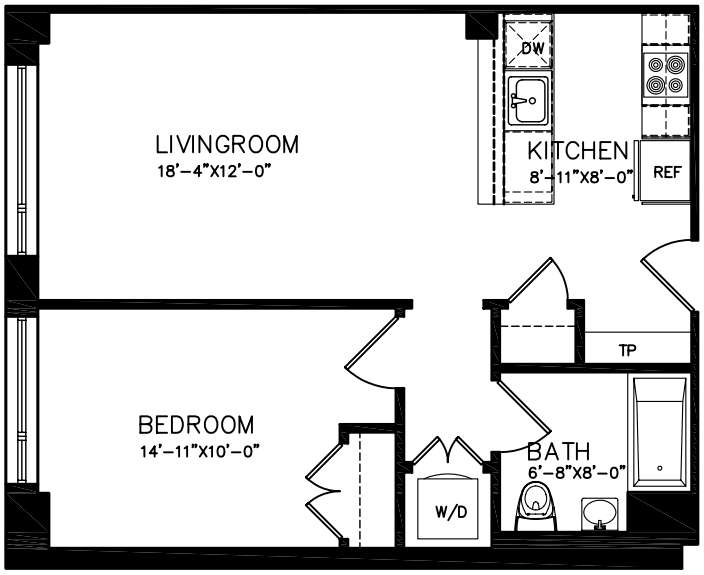

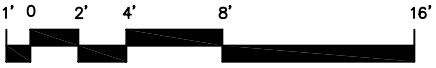

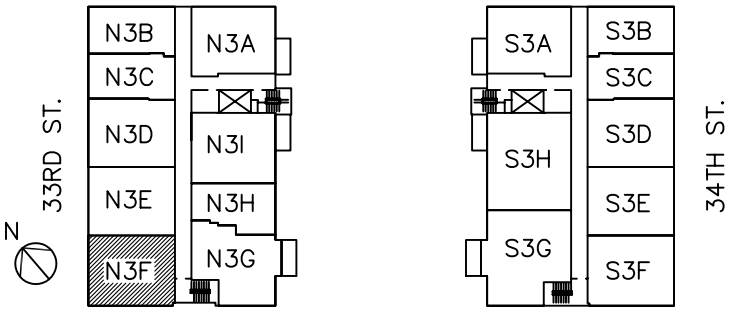

LEGEND :
DW – DISHWASHER
REF – REFRIGERATOR
TP – TALL PANTRY
W/D – WASHER / DRYER

THE 37-14 34TH STREET CONDOMINIUM
37-14 34th STREET
LONG ISLAND CITY, NY 11101

RESIDENCE N3F

FLOOR : 3
LIVINGROOM
1 BEDROOM
1 BATHROOM

INTERIOR : 674.5 SF
UNIT TOTAL : 674.5 SF

The Unit Layout square footage and dimensions are approximate and subject to normal construction variances and tolerances, Square footages exceed the usable floor area. This floor plan is based on construction drawings, minor inaccuracies between this floor plan and the actual Unit layout when built will not excuse a purchaser from completing the purchase of a Unit without abatement in price and without recourse against the Sponsor. Sponsor reserves the right to make changes in accordance with the Offering Plan.

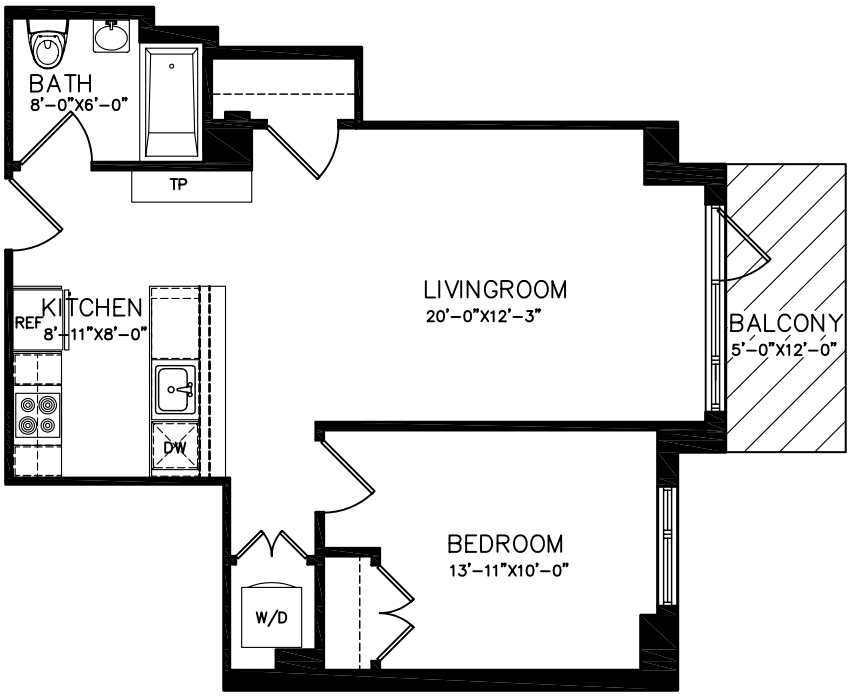

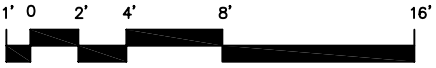

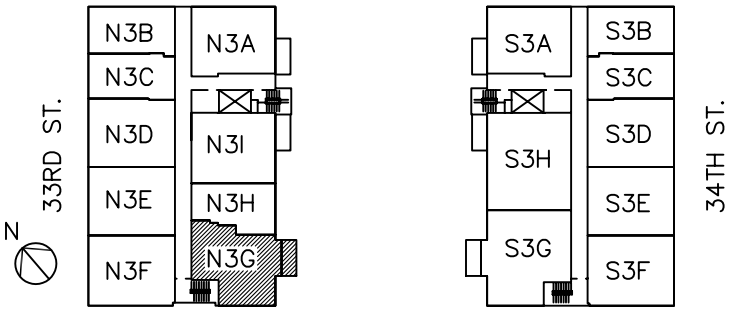

LEGEND :
DW – DISHWASHER
REF – REFRIGERATOR
TP – TALL PANTRY
W/D – WASHER / DRYER

THE 37–14 34TH STREET CONDOMINIUM
37–14 34th STREET
LONG ISLAND CITY, NY 11101

RESIDENCE N3G

FLOOR : 3
LIVINGROOM
1 BEDROOM
1 BATHROOM
BALCONY

INTERIOR : 667.5 SF
BALCONY : 60 SF
UNIT TOTAL : 727.5 SF

The Unit Layout square footage and dimensions are approximate and subject to normal construction variances and tolerances, Square footages exceed the usable floor area. This floor plan is based on construction drawings, minor inaccuracies between this floor plan and the actual Unit layout when built will not excuse a purchaser from completing the purchase of a Unit without abatement in price and without recourse against the Sponsor. Sponsor reserves the right to make changes in accordance with the Offering Plan.

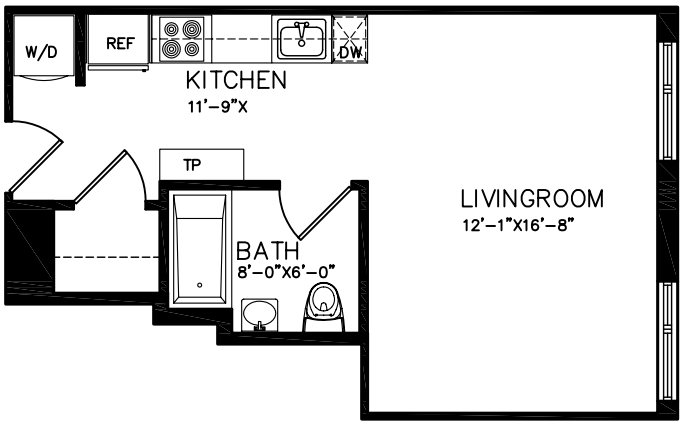

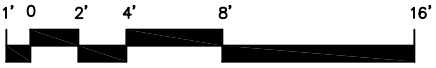

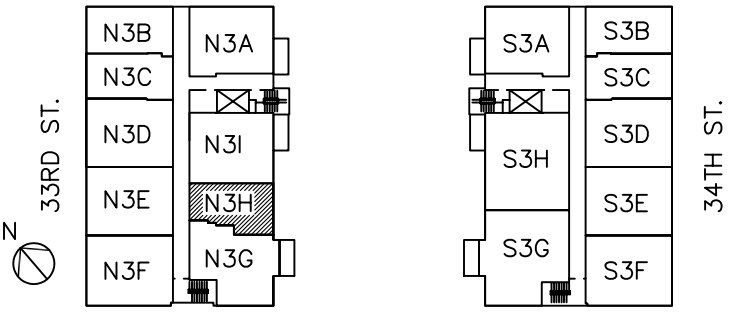

LEGEND :
DW – DISHWASHER
REF – REFRIGERATOR
TP – TALL PANTRY
W/D – WASHER / DRYER

THE 37-14 34TH STREET CONDOMINIUM
37-14 34th STREET
LONG ISLAND CITY, NY 11101

RESIDENCE N3H

FLOOR : 3
LIVINGROOM
1 BATHROOM

INTERIOR : 421.8 SF
UNIT TOTAL : 421.8 SF

The Unit Layout square footage and dimensions are approximate and subject to normal construction variances and tolerances, Square footages exceed the usable floor area. This floor plan is based on construction drawings, minor inaccuracies between this floor plan and the actual Unit layout when built will not excuse a purchaser from completing the purchase of a Unit without abatement in price and without recourse against the Sponsor. Sponsor reserves the right to make changes in accordance with the Offering Plan.

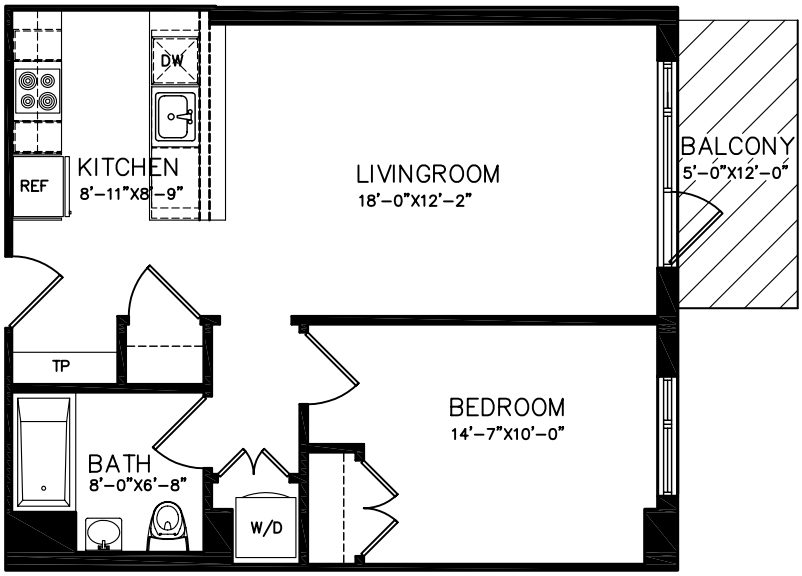

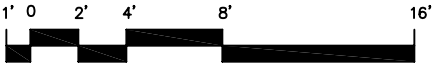

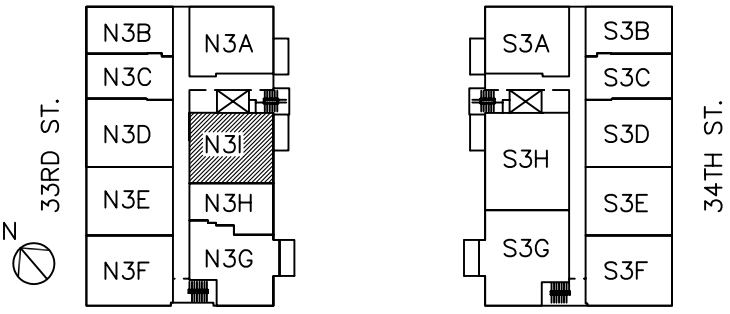

LEGEND :
DW – DISHWASHER
REF – REFRIGERATOR
TP – TALL PANTRY
W/D – WASHER / DRYER

THE 37-14 34TH STREET CONDOMINIUM
37-14 34th STREET
LONG ISLAND CITY, NY 11101

RESIDENCE N3I

FLOOR : 3
LIVINGROOM
1 BEDROOM
1 BATHROOM
BALCONY

INTERIOR : 657.2 SF
BALCONY : 60 SF
UNIT TOTAL : 717.2 SF

The Unit Layout square footage and dimensions are approximate and subject to normal construction variances and tolerances, Square footages exceed the usable floor area. This floor plan is based on construction drawings, minor inaccuracies between this floor plan and the actual Unit layout when built will not excuse a purchaser from completing the purchase of a Unit without abatement in price and without recourse against the Sponsor. Sponsor reserves the right to make changes in accordance with the Offering Plan.

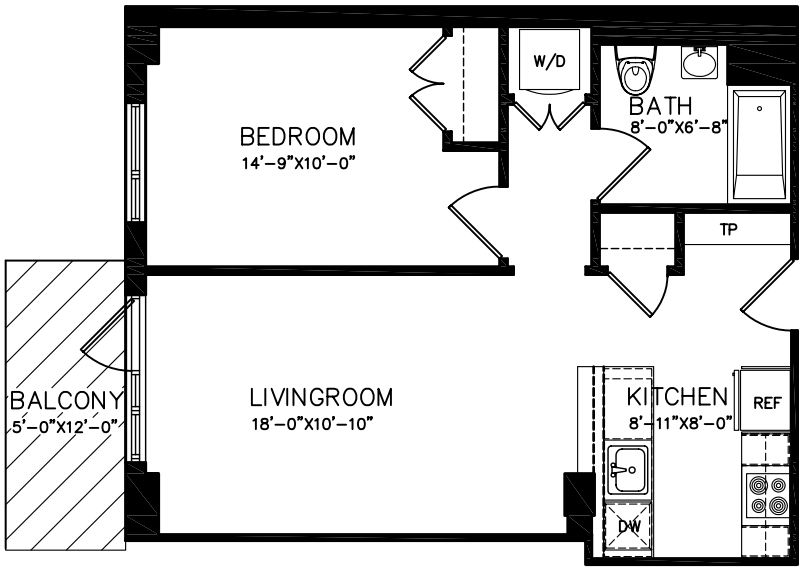

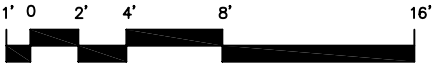

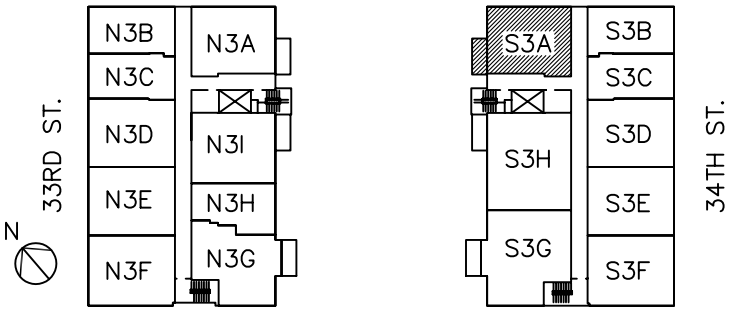

LEGEND :
DW – DISHWASHER
REF – REFRIGERATOR
TP – TALL PANTRY
W/D – WASHER / DRYER

THE 37-14 34TH STREET CONDOMINIUM
37-14 34th STREET
LONG ISLAND CITY, NY 11101

RESIDENCE S3A

FLOOR : 3
LIVINGROOM
1 BEDROOM
1 BATHROOM
BALCONY

INTERIOR : 631.8 SF
BALCONY : 60 SF
UNIT TOTAL : 691.8 SF

The Unit Layout square footage and dimensions are approximate and subject to normal construction variances and tolerances, Square footages exceed the usable floor area. This floor plan is based on construction drawings, minor inaccuracies between this floor plan and the actual Unit layout when built will not excuse a purchaser from completing the purchase of a Unit without abatement in price and without recourse against the Sponsor. Sponsor reserves the right to make changes in accordance with the Offering Plan.

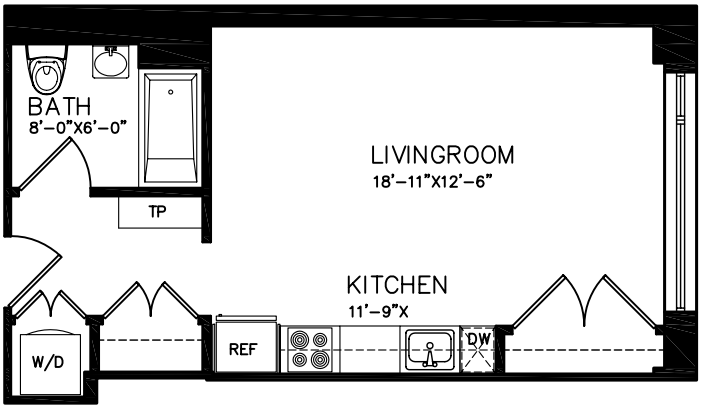

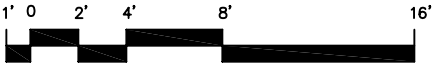

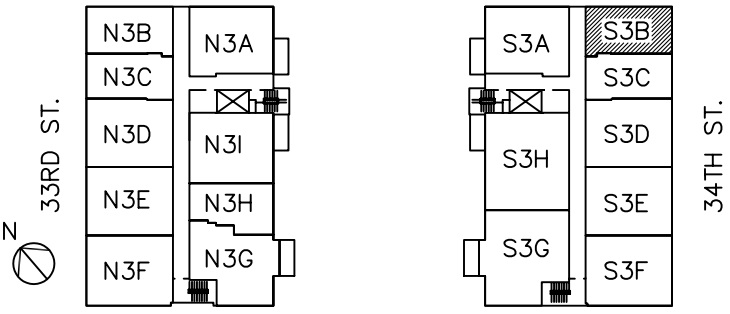

LEGEND :
DW – DISHWASHER
REF – REFRIGERATOR
TP – TALL PANTRY
W/D – WASHER / DRYER

THE 37-14 34TH STREET CONDOMINIUM
37-14 34th STREET
LONG ISLAND CITY, NY 11101

RESIDENCE S3B

FLOOR : 3
LIVINGROOM
1 BATHROOM

INTERIOR : 452.6 SF
UNIT TOTAL : 452.6 SF

The Unit Layout square footage and dimensions are approximate and subject to normal construction variances and tolerances, Square footages exceed the usable floor area. This floor plan is based on construction drawings, minor inaccuracies between this floor plan and the actual Unit layout when built will not excuse a purchaser from completing the purchase of a Unit without abatement in price and without recourse against the Sponsor. Sponsor reserves the right to make changes in accordance with the Offering Plan.

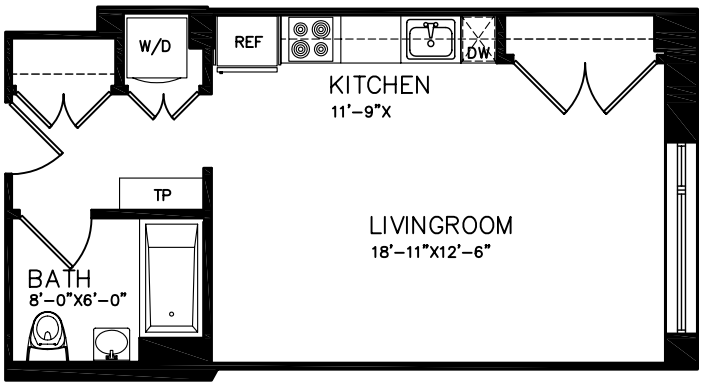

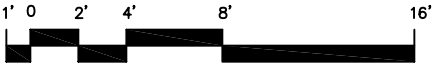

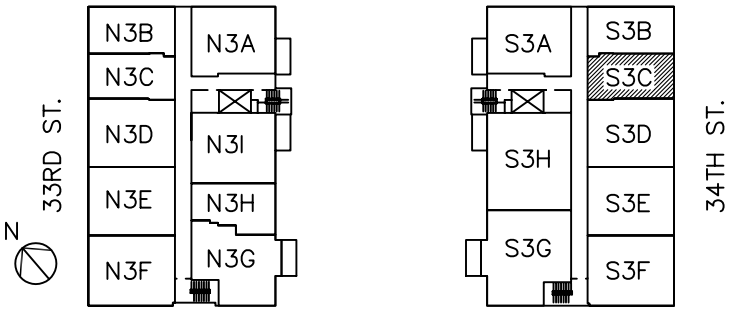

LEGEND :
DW – DISHWASHER
REF – REFRIGERATOR
TP – TALL PANTRY
W/D – WASHER / DRYER

THE 37-14 34TH STREET CONDOMINIUM
37-14 34th STREET
LONG ISLAND CITY, NY 11101

RESIDENCE S3C

FLOOR : 3
LIVINGROOM
1 BATHROOM

INTERIOR : 433.2 SF
UNIT TOTAL : 433.2 SF

The Unit Layout square footage and dimensions are approximate and subject to normal construction variances and tolerances, Square footages exceed the usable floor area. This floor plan is based on construction drawings, minor inaccuracies between this floor plan and the actual Unit layout when built will not excuse a purchaser from completing the purchase of a Unit without abatement in price and without recourse against the Sponsor. Sponsor reserves the right to make changes in accordance with the Offering Plan.

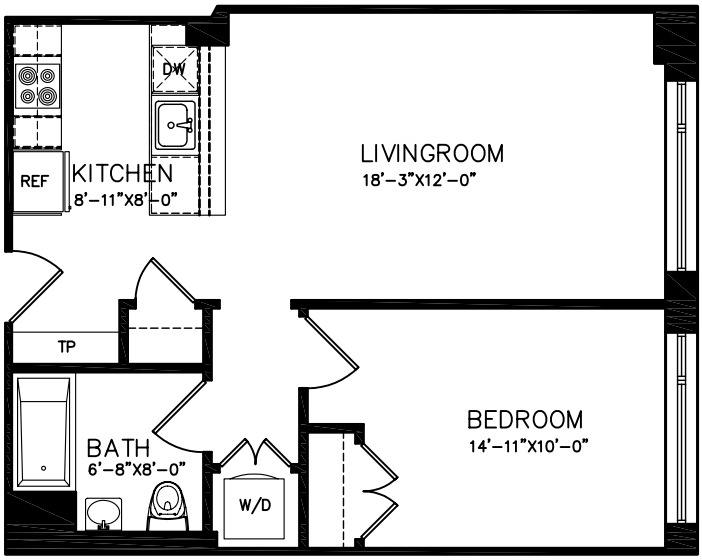

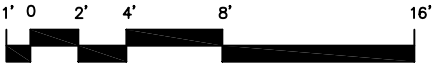

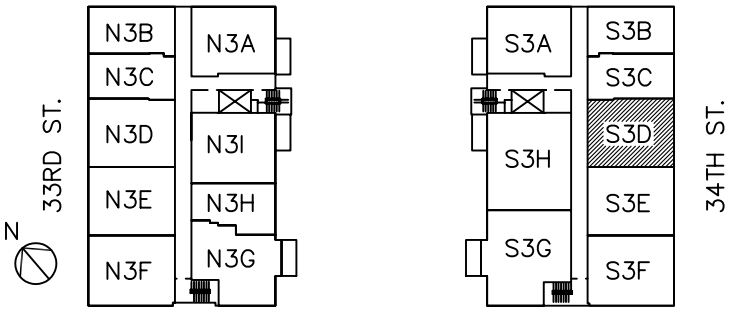

LEGEND :
DW – DISHWASHER
REF – REFRIGERATOR
TP – TALL PANTRY
W/D – WASHER / DRYER

THE 37–14 34TH STREET CONDOMINIUM
37–14 34th STREET
LONG ISLAND CITY, NY 11101

RESIDENCE S3D

FLOOR : 3
LIVINGROOM
1 BEDROOM
1 BATHROOM

INTERIOR : 654.3 SF
UNIT TOTAL : 654.3 SF

The Unit Layout square footage and dimensions are approximate and subject to normal construction variances and tolerances, Square footages exceed the usable floor area. This floor plan is based on construction drawings, minor inaccuracies between this floor plan and the actual Unit layout when built will not excuse a purchaser from completing the purchase of a Unit without abatement in price and without recourse against the Sponsor. Sponsor reserves the right to make changes in accordance with the Offering Plan.

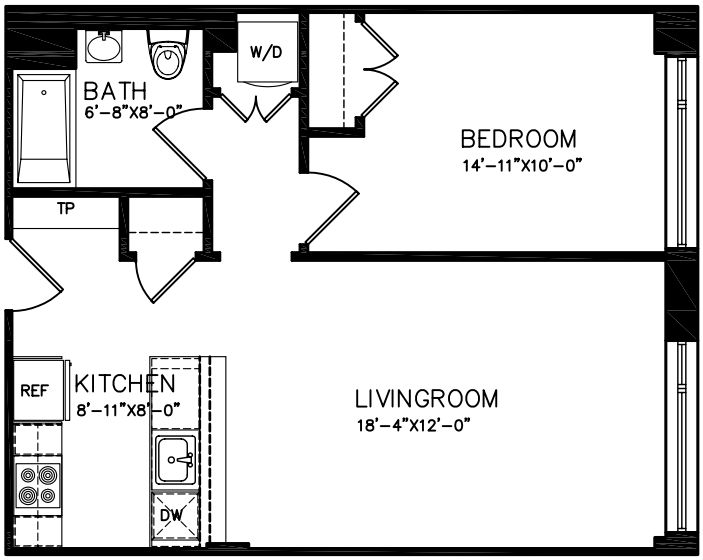

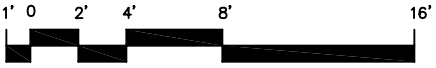

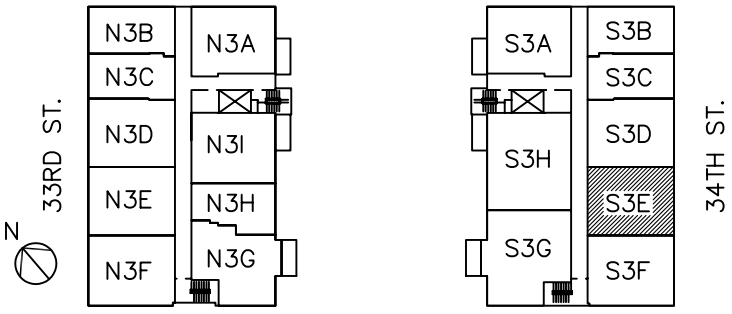

LEGEND :
DW – DISHWASHER
REF – REFRIGERATOR
TP – TALL PANTRY
W/D – WASHER / DRYER

THE 37-14 34TH STREET CONDOMINIUM
37-14 34th STREET
LONG ISLAND CITY, NY 11101

RESIDENCE S3E

FLOOR : 3
LIVINGROOM
1 BEDROOM
1 BATHROOM

INTERIOR : 658.3 SF
UNIT TOTAL : 658.3 SF

The Unit Layout square footage and dimensions are approximate and subject to normal construction variances and tolerances, Square footages exceed the usable floor area. This floor plan is based on construction drawings, minor inaccuracies between this floor plan and the actual Unit layout when built will not excuse a purchaser from completing the purchase of a Unit without abatement in price and without recourse against the Sponsor. Sponsor reserves the right to make changes in accordance with the Offering Plan.

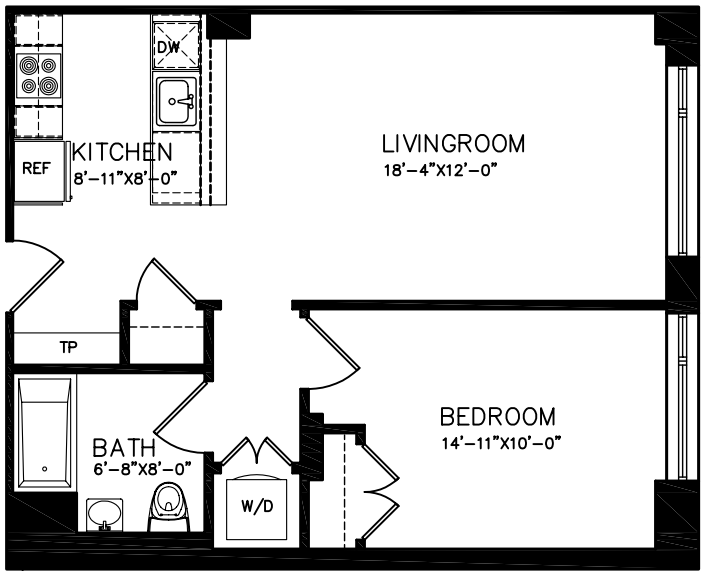

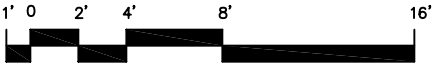

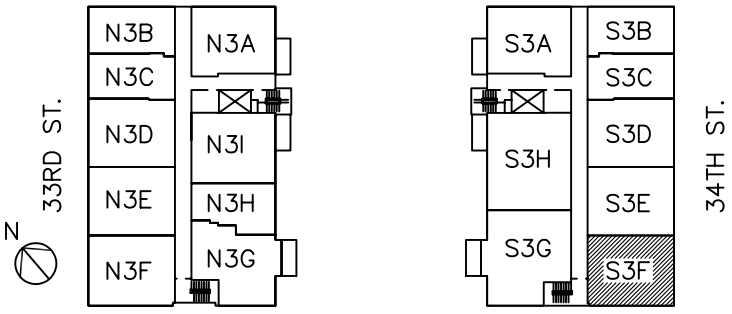

LEGEND :
DW – DISHWASHER
REF – REFRIGERATOR
TP – TALL PANTRY
W/D – WASHER / DRYER

THE 37-14 34TH STREET CONDOMINIUM
37-14 34th STREET
LONG ISLAND CITY, NY 11101

RESIDENCE S3F

FLOOR : 3
LIVINGROOM
1 BEDROOM
1 BATHROOM

INTERIOR : 675.1 SF
UNIT TOTAL : 675.1 SF

The Unit Layout square footage and dimensions are approximate and subject to normal construction variances and tolerances, Square footages exceed the usable floor area. This floor plan is based on construction drawings, minor inaccuracies between this floor plan and the actual Unit layout when built will not excuse a purchaser from completing the purchase of a Unit without abatement in price and without recourse against the Sponsor. Sponsor reserves the right to make changes in accordance with the Offering Plan.

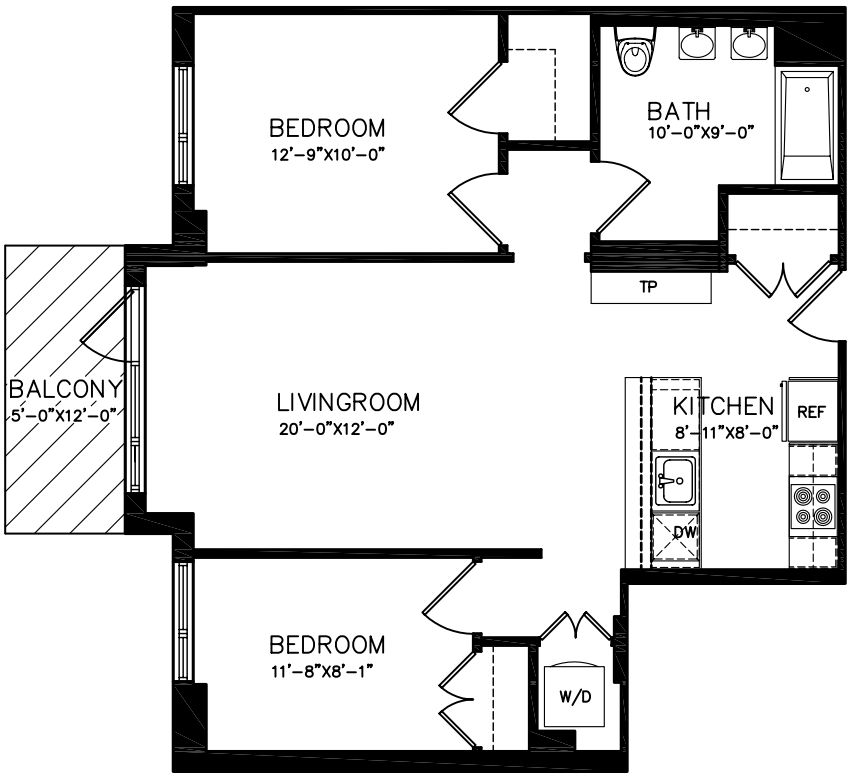

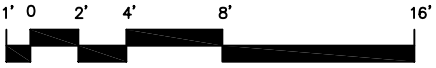

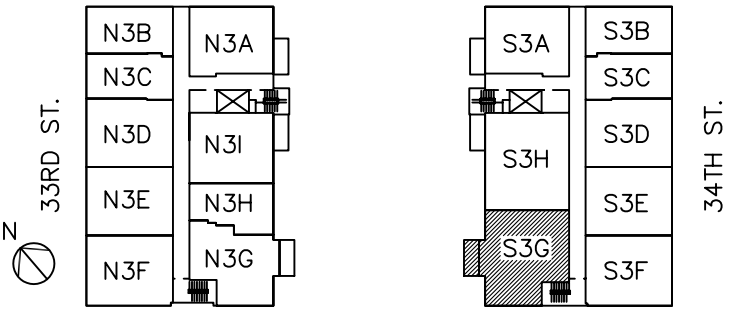

LEGEND :
DW – DISHWASHER
REF – REFRIGERATOR
TP – TALL PANTRY
W/D – WASHER / DRYER

THE 37-14 34TH STREET CONDOMINIUM
37-14 34th STREET
LONG ISLAND CITY, NY 11101

RESIDENCE S3G

FLOOR : 3
LIVINGROOM
2 BEDROOMS
1 BATHROOM
BALCONY

INTERIOR : 844.1 SF
BALCONY : 60 SF
UNIT TOTAL : 904.1 SF

The Unit Layout square footage and dimensions are approximate and subject to normal construction variances and tolerances, Square footages exceed the usable floor area. This floor plan is based on construction drawings, minor inaccuracies between this floor plan and the actual Unit layout when built will not excuse a purchaser from completing the purchase of a Unit without abatement in price and without recourse against the Sponsor. Sponsor reserves the right to make changes in accordance with the Offering Plan.

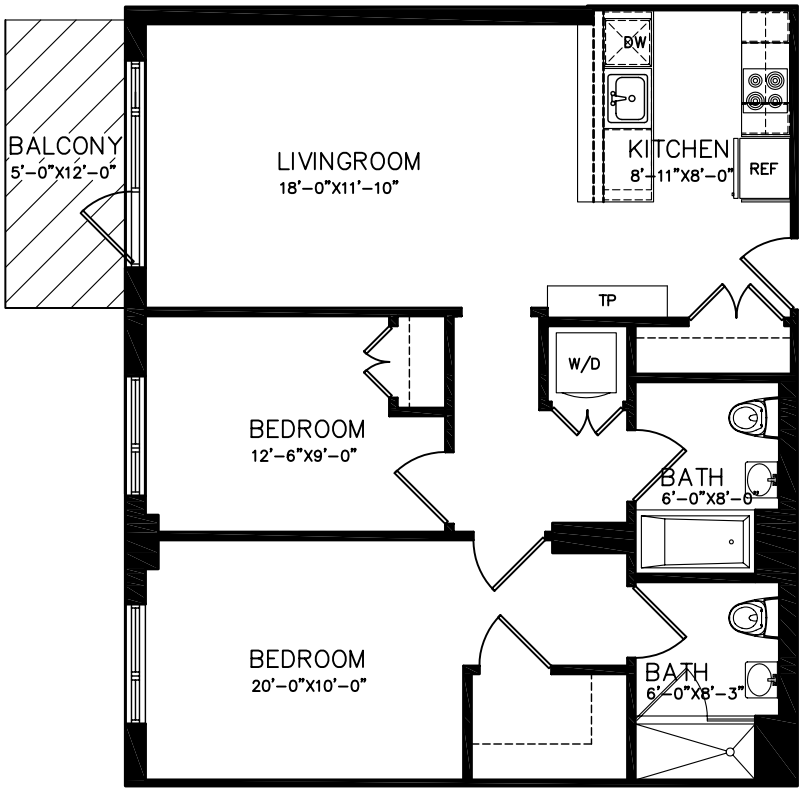

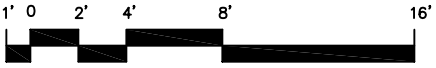

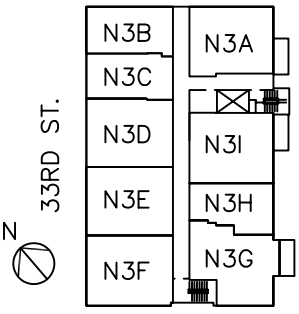

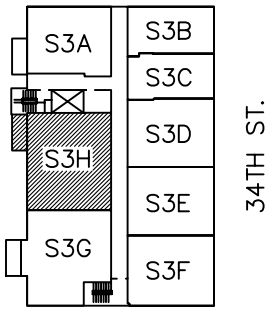

LEGEND :
DW – DISHWASHER
REF – REFRIGERATOR
TP – TALL PANTRY
W/D – WASHER / DRYER

THE 37–14 34TH STREET CONDOMINIUM
37–14 34th STREET
LONG ISLAND CITY, NY 11101

RESIDENCE S3H

FLOOR : 3
LIVINGROOM
2 BEDROOMS
2 BATHROOMS
BALCONY

INTERIOR : 909.2 SF
BALCONY : 60 SF
UNIT TOTAL : 969.2 SF

The Unit Layout square footage and dimensions are approximate and subject to normal construction variances and tolerances, Square footages exceed the usable floor area. This floor plan is based on construction drawings, minor inaccuracies between this floor plan and the actual Unit layout when built will not excuse a purchaser from completing the purchase of a Unit without abatement in price and without recourse against the Sponsor. Sponsor reserves the right to make changes in accordance with the Offering Plan.

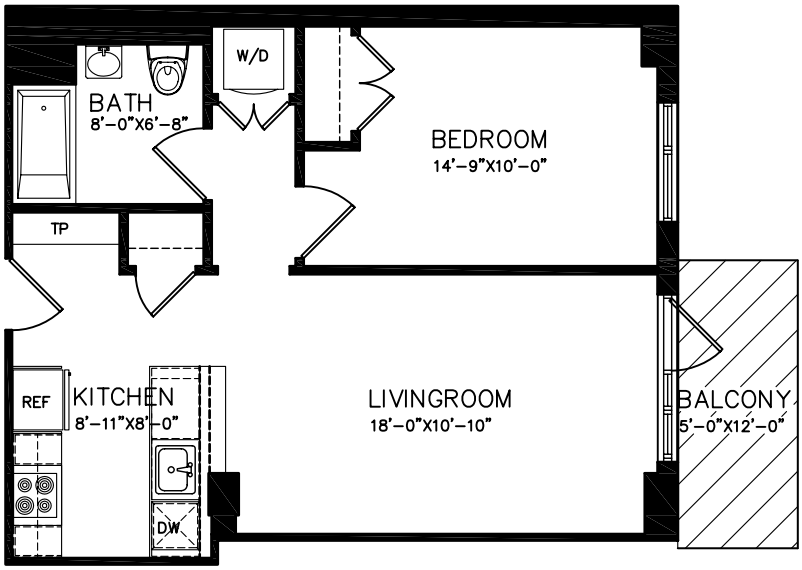

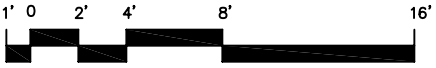

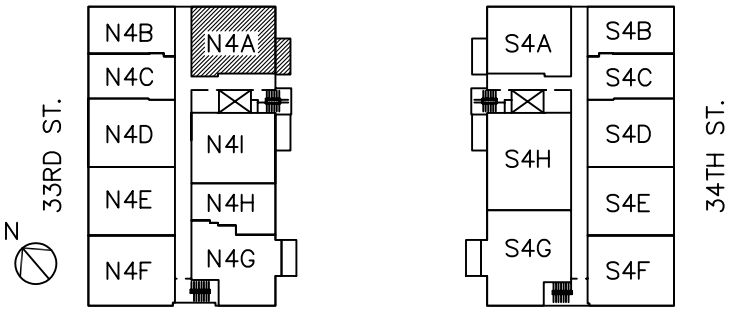

LEGEND :
DW – DISHWASHER
REF – REFRIGERATOR
TP – TALL PANTRY
W/D – WASHER / DRYER

THE 37–14 34TH STREET CONDOMINIUM
37–14 34th STREET
LONG ISLAND CITY, NY 11101

RESIDENCE N4A

FLOOR : 4
LIVINGROOM
1 BEDROOM
1 BATHROOM
BALCONY

INTERIOR : 631.8 SF
BALCONY : 60 SF
UNIT TOTAL : 691.8 SF

The Unit Layout square footage and dimensions are approximate and subject to normal construction variances and tolerances, Square footages exceed the usable floor area. This floor plan is based on construction drawings, minor inaccuracies between this floor plan and the actual Unit layout when built will not excuse a purchaser from completing the purchase of a Unit without abatement in price and without recourse against the Sponsor. Sponsor reserves the right to make changes in accordance with the Offering Plan.

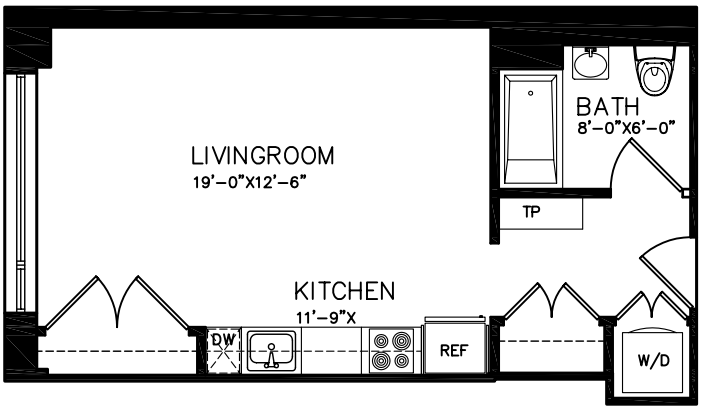

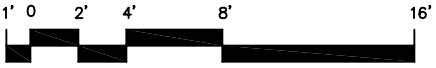

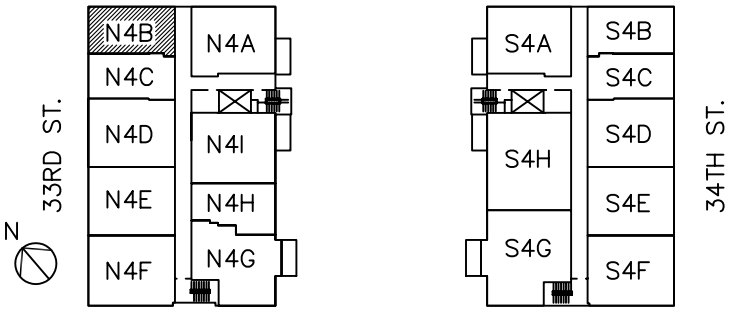

LEGEND :
DW – DISHWASHER
REF – REFRIGERATOR
TP – TALL PANTRY
W/D – WASHER / DRYER

THE 37–14 34TH STREET CONDOMINIUM
37–14 34th STREET
LONG ISLAND CITY, NY 11101

RESIDENCE N4B

FLOOR : 4
LIVINGROOM
1 BATHROOM

INTERIOR : 452.5 SF
UNIT TOTAL : 452.5 SF

The Unit Layout square footage and dimensions are approximate and subject to normal construction variances and tolerances, Square footages exceed the usable floor area. This floor plan is based on construction drawings, minor inaccuracies between this floor plan and the actual Unit layout when built will not excuse a purchaser from completing the purchase of a Unit without abatement in price and without recourse against the Sponsor. Sponsor reserves the right to make changes in accordance with the Offering Plan.

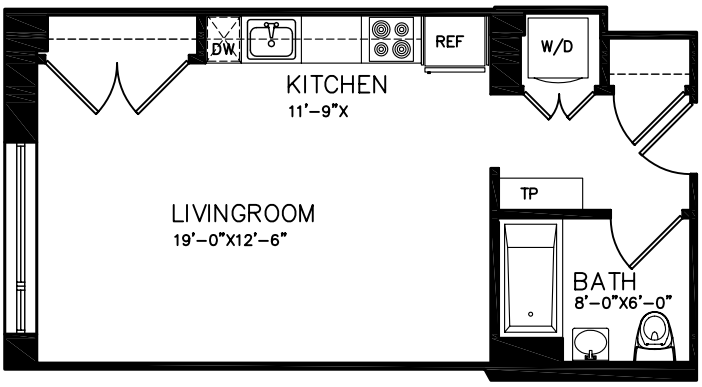

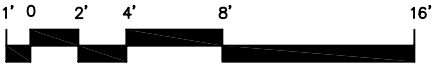

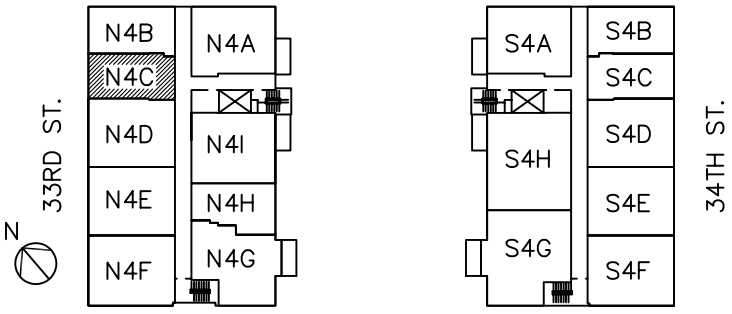

LEGEND :
DW – DISHWASHER
REF – REFRIGERATOR
TP – TALL PANTRY
W/D – WASHER / DRYER

THE 37–14 34TH STREET CONDOMINIUM
37–14 34th STREET
LONG ISLAND CITY, NY 11101

RESIDENCE N4C

FLOOR : 4
LIVINGROOM
1 BATHROOM

INTERIOR : 433.2 SF
UNIT TOTAL : 433.2 SF

The Unit Layout square footage and dimensions are approximate and subject to normal construction variances and tolerances, Square footages exceed the usable floor area. This floor plan is based on construction drawings, minor inaccuracies between this floor plan and the actual Unit layout when built will not excuse a purchaser from completing the purchase of a Unit without abatement in price and without recourse against the Sponsor. Sponsor reserves the right to make changes in accordance with the Offering Plan.

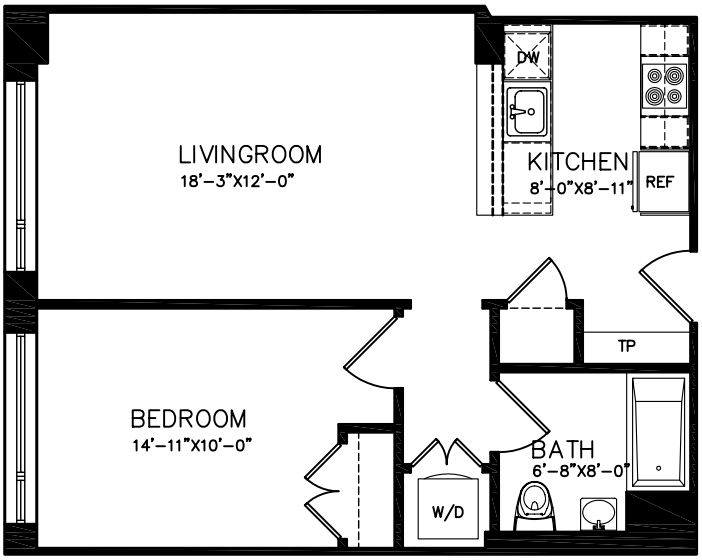

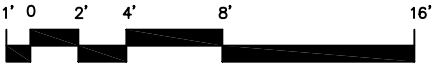

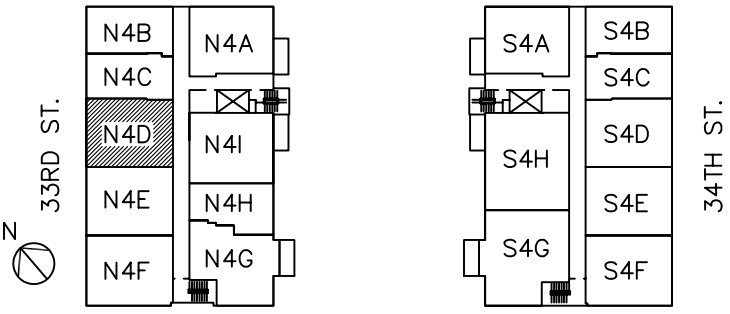

LEGEND :
DW – DISHWASHER
REF – REFRIGERATOR
TP – TALL PANTRY
W/D – WASHER / DRYER

THE 37–14 34TH STREET CONDOMINIUM
37–14 34th STREET
LONG ISLAND CITY, NY 11101

RESIDENCE N4D

FLOOR : 4
LIVINGROOM
1 BEDROOM
1 BATHROOM

INTERIOR : 654.3 SF
UNIT TOTAL : 654.3 SF

The Unit Layout square footage and dimensions are approximate and subject to normal construction variances and tolerances, Square footages exceed the usable floor area. This floor plan is based on construction drawings, minor inaccuracies between this floor plan and the actual Unit layout when built will not excuse a purchaser from completing the purchase of a Unit without abatement in price and without recourse against the Sponsor. Sponsor reserves the right to make changes in accordance with the Offering Plan.

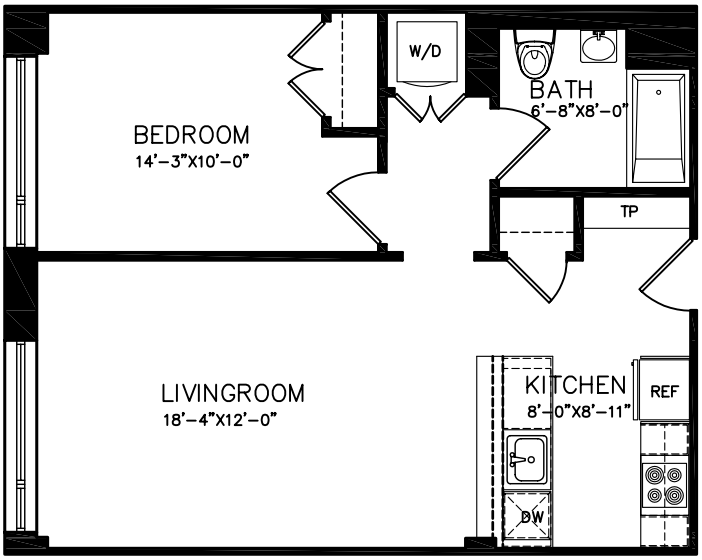

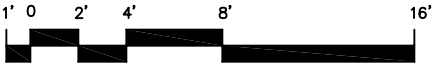

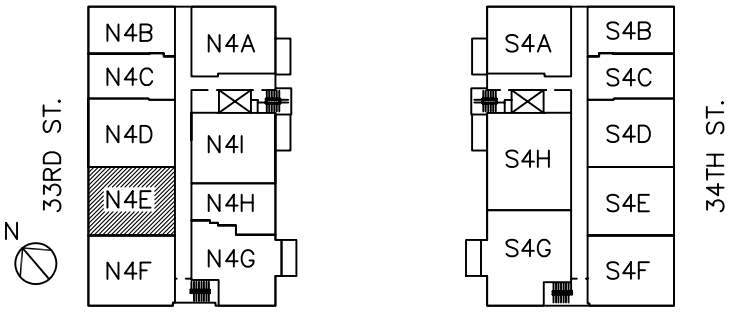

LEGEND :
DW – DISHWASHER
REF – REFRIGERATOR
TP – TALL PANTRY
W/D – WASHER / DRYER

THE 37-14 34TH STREET CONDOMINIUM
37-14 34th STREET
LONG ISLAND CITY, NY 11101

RESIDENCE N4E

FLOOR : 4
LIVINGROOM
1 BEDROOM
1 BATHROOM

INTERIOR : 658.3 SF
UNIT TOTAL : 658.3 SF

The Unit Layout square footage and dimensions are approximate and subject to normal construction variances and tolerances, Square footages exceed the usable floor area. This floor plan is based on construction drawings, minor inaccuracies between this floor plan and the actual Unit layout when built will not excuse a purchaser from completing the purchase of a Unit without abatement in price and without recourse against the Sponsor. Sponsor reserves the right to make changes in accordance with the Offering Plan.

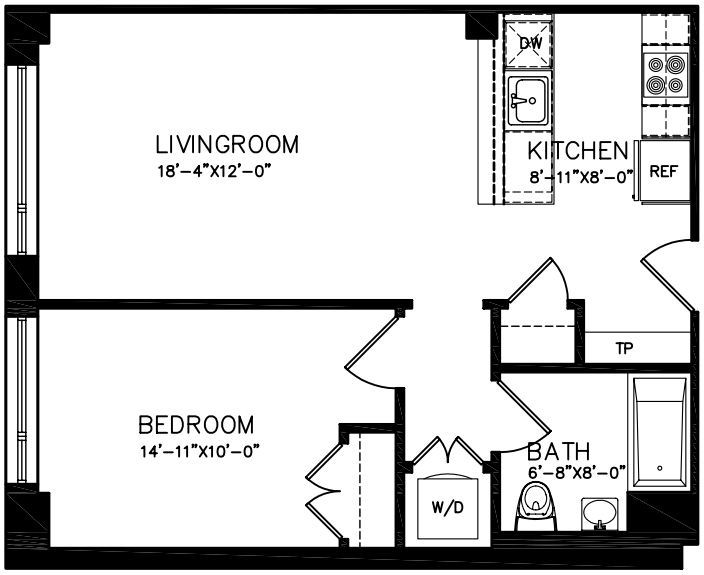

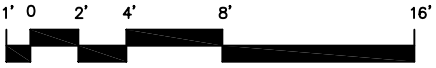

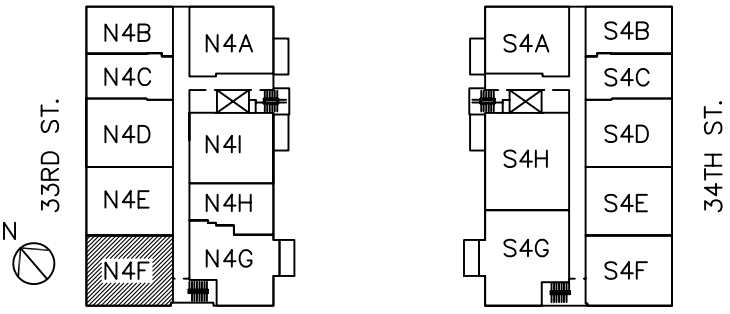

LEGEND :
DW – DISHWASHER
REF – REFRIGERATOR
TP – TALL PANTRY
W/D – WASHER / DRYER

THE 37-14 34TH STREET CONDOMINIUM
37-14 34th STREET
LONG ISLAND CITY, NY 11101

RESIDENCE N4F

FLOOR : 4
LIVINGROOM
1 BEDROOM
1 BATHROOM

INTERIOR : 674.5 SF
UNIT TOTAL : 674.5 SF

The Unit Layout square footage and dimensions are approximate and subject to normal construction variances and tolerances, Square footages exceed the usable floor area. This floor plan is based on construction drawings, minor inaccuracies between this floor plan and the actual Unit layout when built will not excuse a purchaser from completing the purchase of a Unit without abatement in price and without recourse against the Sponsor. Sponsor reserves the right to make changes in accordance with the Offering Plan.

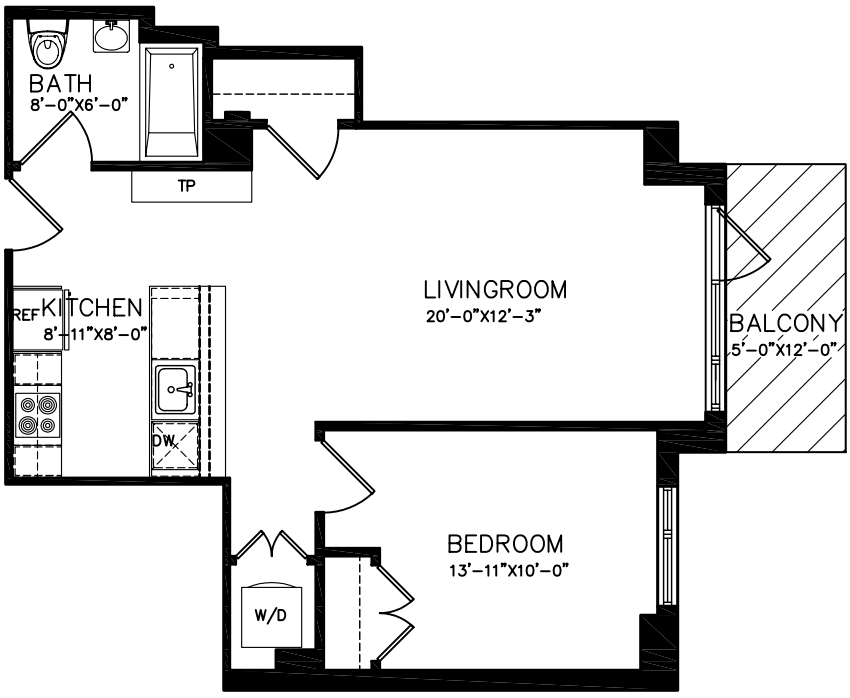

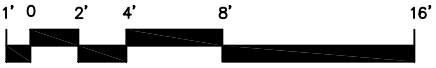

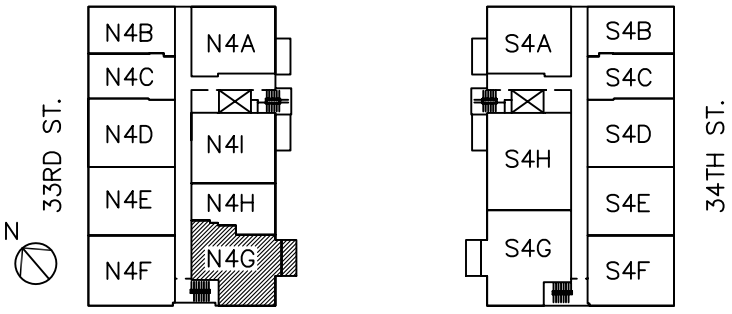

LEGEND :
DW – DISHWASHER
REF – REFRIGERATOR
TP – TALL PANTRY
W/D – WASHER / DRYER

THE 37–14 34TH STREET CONDOMINIUM
37–14 34th STREET
LONG ISLAND CITY, NY 11101

RESIDENCE N4G

FLOOR : 4
LIVINGROOM
1 BEDROOM
1 BATHROOM
BALCONY

INTERIOR : 667.5 SF
BALCONY : 60 SF
UNIT TOTAL : 727.5 SF

The Unit Layout square footage and dimensions are approximate and subject to normal construction variances and tolerances, Square footages exceed the usable floor area. This floor plan is based on construction drawings, minor inaccuracies between this floor plan and the actual Unit layout when built will not excuse a purchaser from completing the purchase of a Unit without abatement in price and without recourse against the Sponsor. Sponsor reserves the right to make changes in accordance with the Offering Plan.

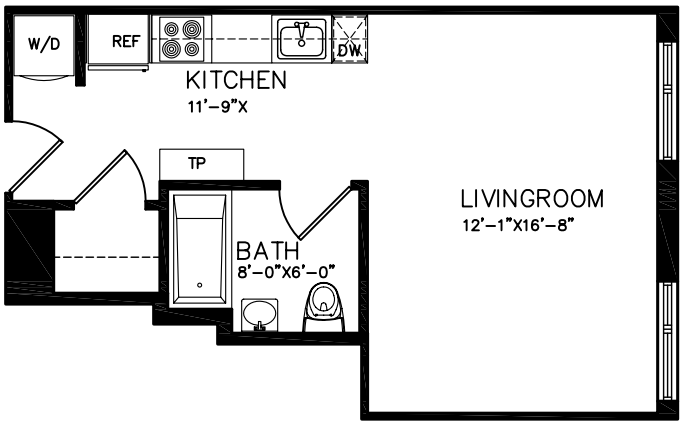

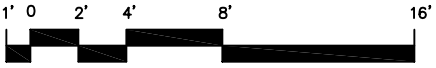

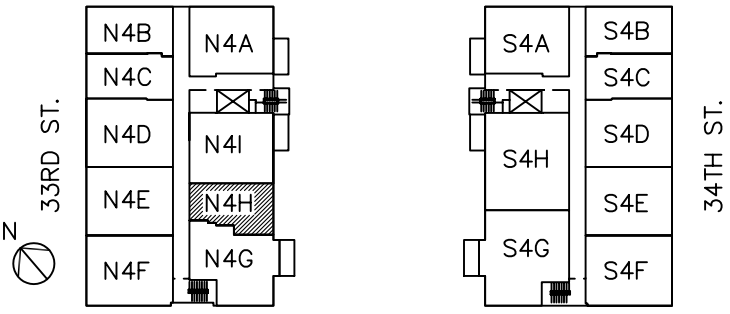

LEGEND :
DW – DISHWASHER
REF – REFRIGERATOR
TP – TALL PANTRY
W/D – WASHER / DRYER

THE 37-14 34TH STREET CONDOMINIUM
37-14 34th STREET
LONG ISLAND CITY, NY 11101

RESIDENCE N4H

FLOOR : 4
LIVINGROOM
1 BATHROOM

INTERIOR : 421.8 SF
UNIT TOTAL : 421.8 SF

The Unit Layout square footage and dimensions are approximate and subject to normal construction variances and tolerances, Square footages exceed the usable floor area. This floor plan is based on construction drawings, minor inaccuracies between this floor plan and the actual Unit layout when built will not excuse a purchaser from completing the purchase of a Unit without abatement in price and without recourse against the Sponsor. Sponsor reserves the right to make changes in accordance with the Offering Plan.

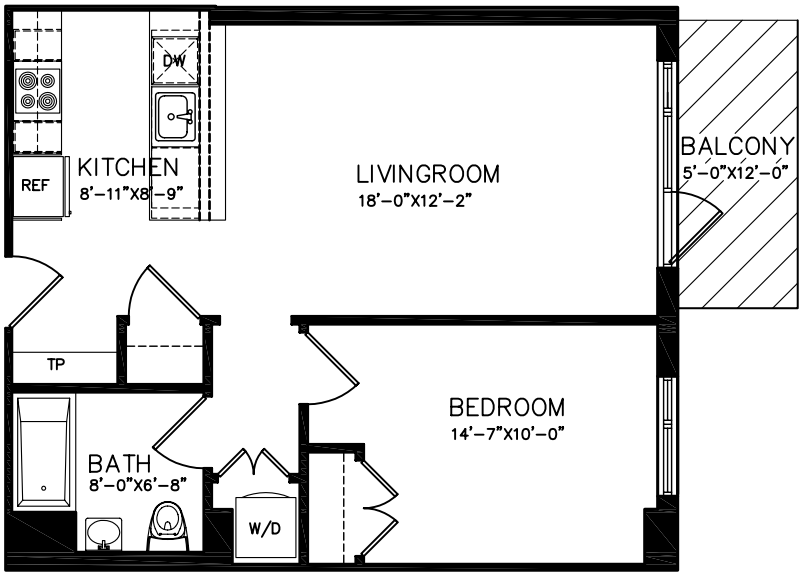

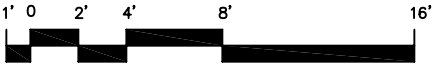

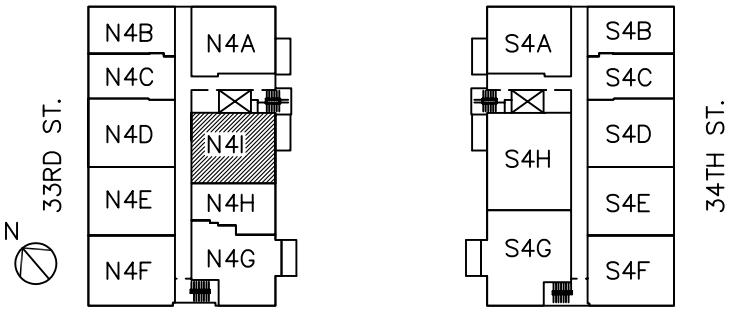

LEGEND :
DW – DISHWASHER
REF – REFRIGERATOR
TP – TALL PANTRY
W/D – WASHER / DRYER

THE 37–14 34TH STREET CONDOMINIUM
37–14 34th STREET
LONG ISLAND CITY, NY 11101

RESIDENCE N4I

FLOOR : 4
LIVINGROOM
1 BEDROOM
1 BATHROOM
BALCONY

INTERIOR : 657.2 SF
BALCONY : 60 SF
UNIT TOTAL : 717.2 SF

The Unit Layout square footage and dimensions are approximate and subject to normal construction variances and tolerances, Square footages exceed the usable floor area. This floor plan is based on construction drawings, minor inaccuracies between this floor plan and the actual Unit layout when built will not excuse a purchaser from completing the purchase of a Unit without abatement in price and without recourse against the Sponsor. Sponsor reserves the right to make changes in accordance with the Offering Plan.

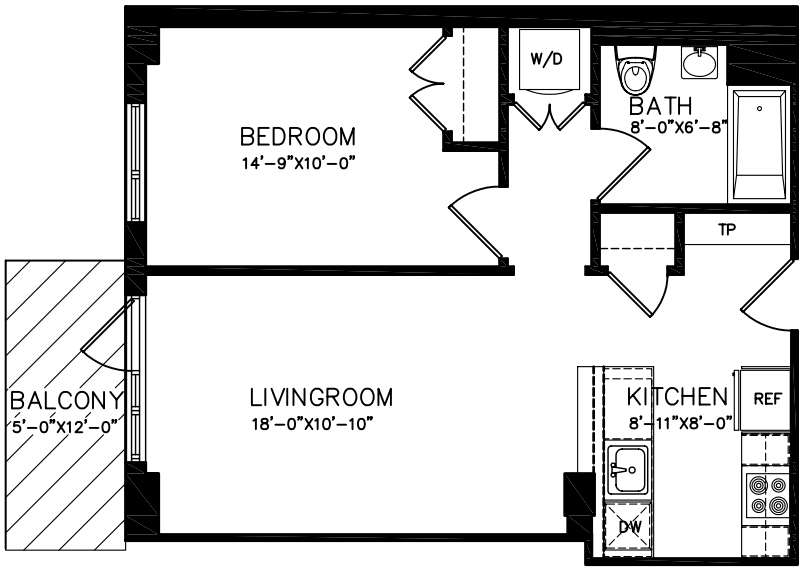

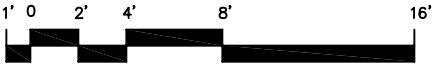

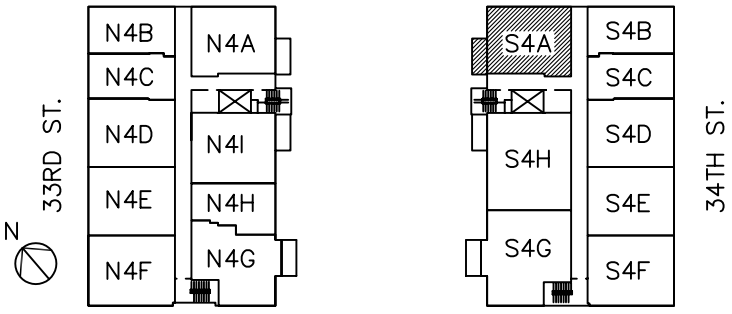

LEGEND :
DW – DISHWASHER
REF – REFRIGERATOR
TP – TALL PANTRY
W/D – WASHER / DRYER

THE 37–14 34TH STREET CONDOMINIUM
37–14 34th STREET
LONG ISLAND CITY, NY 11101

RESIDENCE S4A

FLOOR : 4
LIVINGROOM
1 BEDROOM
1 BATHROOM
BALCONY

INTERIOR : 631.8 SF
BALCONY : 60 SF
UNIT TOTAL : 691.8 SF

The Unit Layout square footage and dimensions are approximate and subject to normal construction variances and tolerances, Square footages exceed the usable floor area. This floor plan is based on construction drawings, minor inaccuracies between this floor plan and the actual Unit layout when built will not excuse a purchaser from completing the purchase of a Unit without abatement in price and without recourse against the Sponsor. Sponsor reserves the right to make changes in accordance with the Offering Plan.

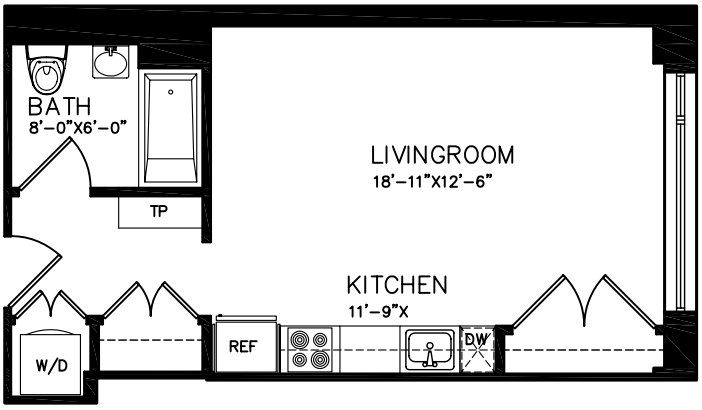

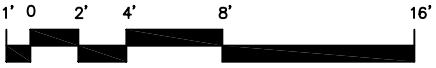

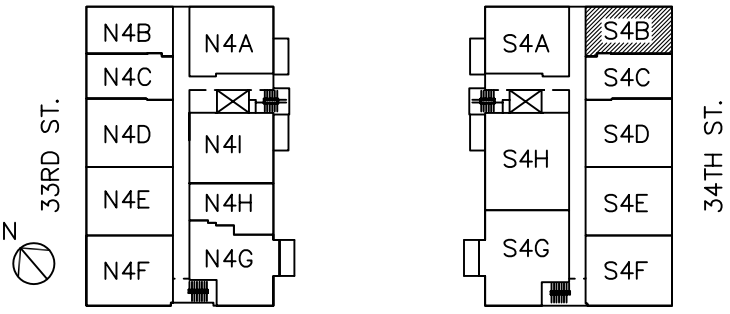

LEGEND :
DW – DISHWASHER
REF – REFRIGERATOR
TP – TALL PANTRY
W/D – WASHER / DRYER

THE 37-14 34TH STREET CONDOMINIUM
37-14 34th STREET
LONG ISLAND CITY, NY 11101

RESIDENCE S4B

FLOOR : 4
LIVINGROOM
1 BATHROOM

INTERIOR : 452.6 SF
UNIT TOTAL : 452.6 SF

The Unit Layout square footage and dimensions are approximate and subject to normal construction variances and tolerances, Square footages exceed the usable floor area. This floor plan is based on construction drawings, minor inaccuracies between this floor plan and the actual Unit layout when built will not excuse a purchaser from completing the purchase of a Unit without abatement in price and without recourse against the Sponsor. Sponsor reserves the right to make changes in accordance with the Offering Plan.

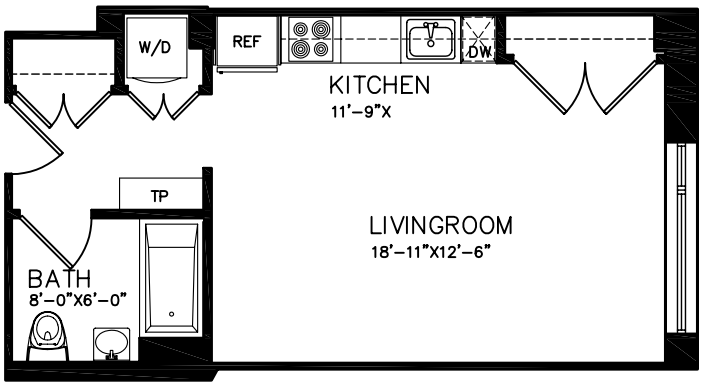

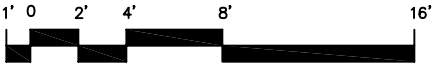

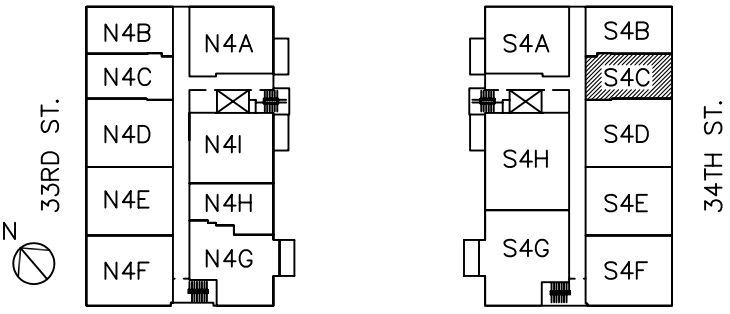

LEGEND :
DW – DISHWASHER
REF – REFRIGERATOR
TP – TALL PANTRY
W/D – WASHER / DRYER

THE 37–14 34TH STREET CONDOMINIUM
37–14 34th STREET
LONG ISLAND CITY, NY 11101

RESIDENCE S4C

FLOOR : 4
LIVINGROOM
1 BATHROOM

INTERIOR : 433.2 SF
UNIT TOTAL : 433.2 SF

The Unit Layout square footage and dimensions are approximate and subject to normal construction variances and tolerances, Square footages exceed the usable floor area. This floor plan is based on construction drawings, minor inaccuracies between this floor plan and the actual Unit layout when built will not excuse a purchaser from completing the purchase of a Unit without abatement in price and without recourse against the Sponsor. Sponsor reserves the right to make changes in accordance with the Offering Plan.

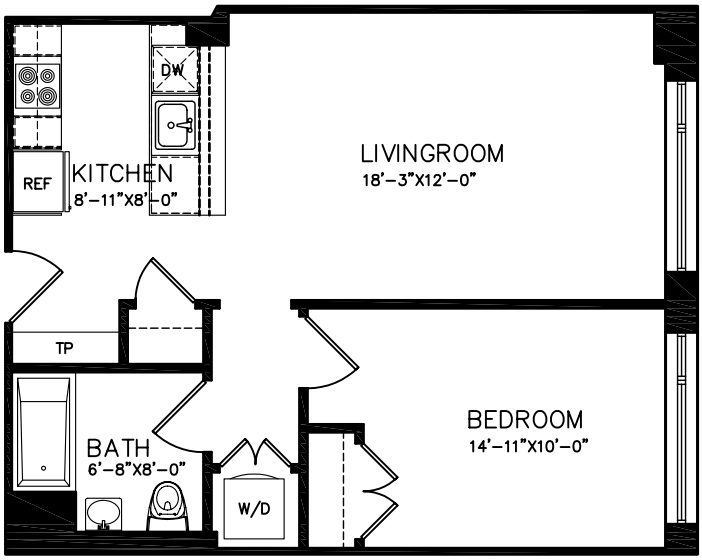

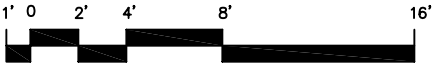

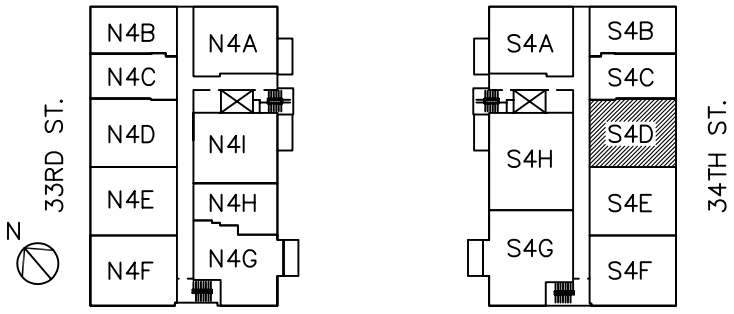

LEGEND :
DW – DISHWASHER
REF – REFRIGERATOR
TP – TALL PANTRY
W/D – WASHER / DRYER

THE 37–14 34TH STREET CONDOMINIUM
37–14 34th STREET
LONG ISLAND CITY, NY 11101

RESIDENCE S4D

FLOOR : 4
LIVINGROOM
1 BEDROOM
1 BATHROOM

INTERIOR : 654.3 SF
UNIT TOTAL : 654.3 SF

The Unit Layout square footage and dimensions are approximate and subject to normal construction variances and tolerances, Square footages exceed the usable floor area. This floor plan is based on construction drawings, minor inaccuracies between this floor plan and the actual Unit layout when built will not excuse a purchaser from completing the purchase of a Unit without abatement in price and without recourse against the Sponsor. Sponsor reserves the right to make changes in accordance with the Offering Plan.

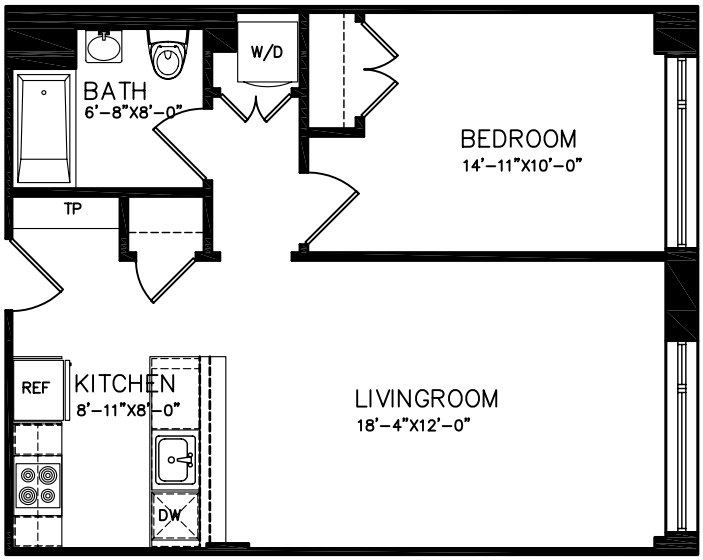

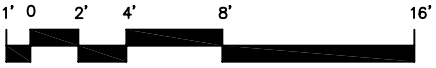

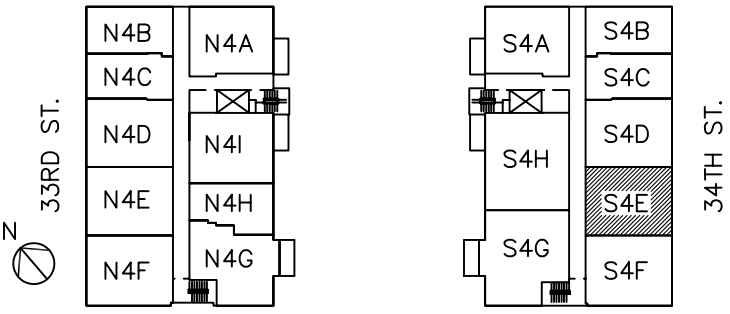

LEGEND :
DW – DISHWASHER
REF – REFRIGERATOR
TP – TALL PANTRY
W/D – WASHER / DRYER

THE 37–14 34TH STREET CONDOMINIUM
37–14 34th STREET
LONG ISLAND CITY, NY 11101

RESIDENCE S4E

FLOOR : 4
LIVINGROOM
1 BEDROOM
1 BATHROOM

INTERIOR : 658.3 SF
UNIT TOTAL : 658.3 SF

The Unit Layout square footage and dimensions are approximate and subject to normal construction variances and tolerances, Square footages exceed the usable floor area. This floor plan is based on construction drawings, minor inaccuracies between this floor plan and the actual Unit layout when built will not excuse a purchaser fr

onsor reserves

the right to make changes in accordance with the Offering Plan.

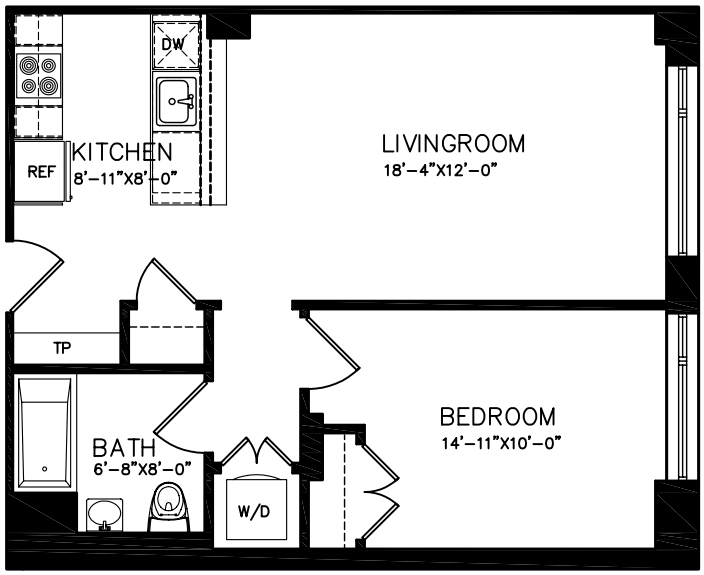

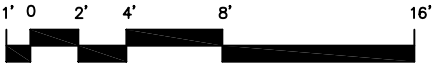

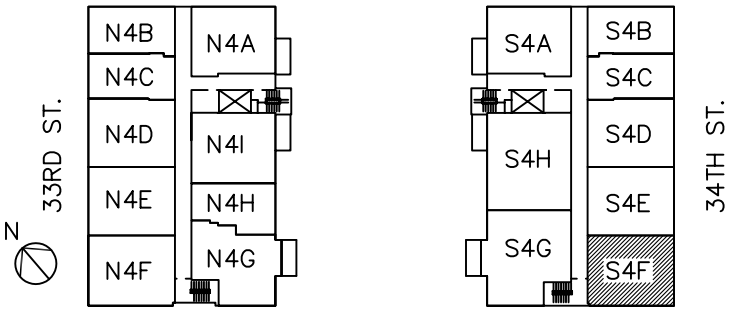

LEGEND :
DW – DISHWASHER
REF – REFRIGERATOR
TP – TALL PANTRY
W/D – WASHER / DRYER

THE 37-14 34TH STREET CONDOMINIUM
37-14 34th STREET
LONG ISLAND CITY, NY 11101

RESIDENCE S4F

FLOOR : 4
LIVINGROOM
1 BEDROOM
1 BATHROOM

INTERIOR : 675.1 SF
UNIT TOTAL : 675.1 SF

The Unit Layout square footage and dimensions are approximate and subject to normal construction variances and tolerances, Square footages exceed the usable floor area. This floor plan is based on construction drawings, minor inaccuracies between this floor plan and the actual Unit layout when built will not excuse a purchaser from completing the purchase of a Unit without abatement in price and without recourse against the Sponsor. Sponsor reserves the right to make changes in accordance with the Offering Plan.

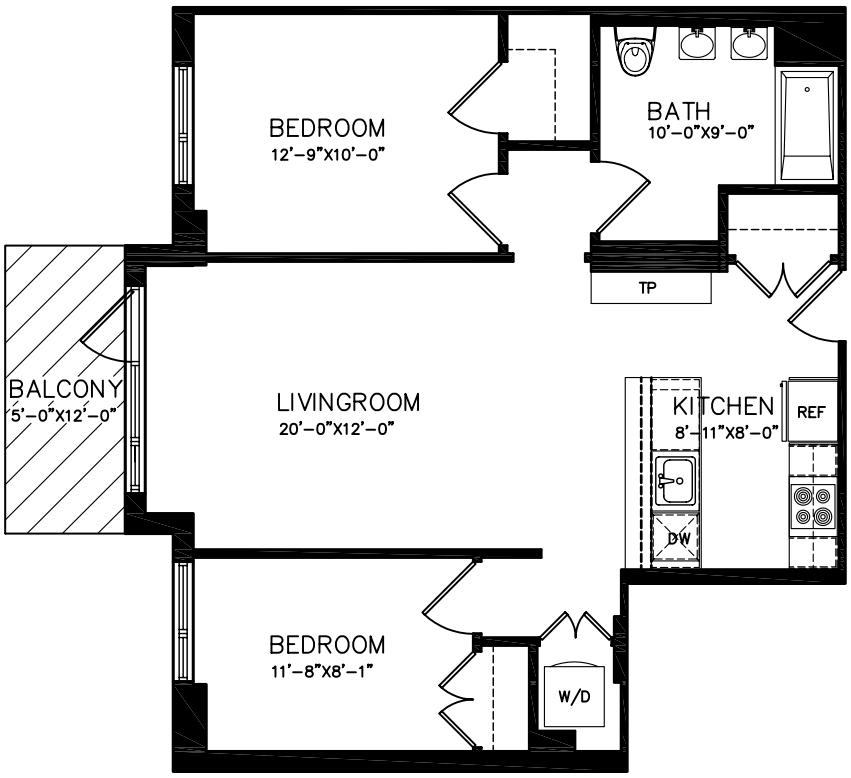

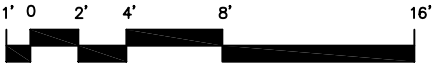

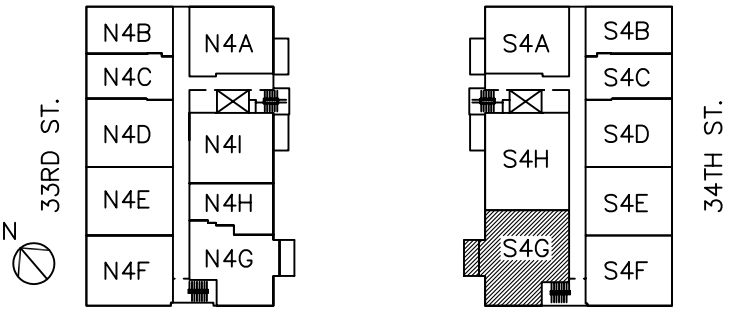

LEGEND :
DW – DISHWASHER
REF – REFRIGERATOR
TP – TALL PANTRY
W/D – WASHER / DRYER

THE 37–14 34TH STREET CONDOMINIUM
37–14 34th STREET
LONG ISLAND CITY, NY 11101

RESIDENCE S4G

FLOOR : 4
LIVINGROOM
2 BEDROOMS
1 BATHROOM
BALCONY

INTERIOR : 844.1 SF
BALCONY : 60 SF
UNIT TOTAL : 904.1 SF

The Unit Layout square footage and dimensions are approximate and subject to normal construction variances and tolerances, Square footages exceed the usable floor area. This floor plan is based on construction drawings, minor inaccuracies between this floor plan and the actual Unit layout when built will not excuse a purchaser from completing the purchase of a Unit without abatement in price and without recourse against the Sponsor. Sponsor reserves the right to make changes in accordance with the Offering Plan.

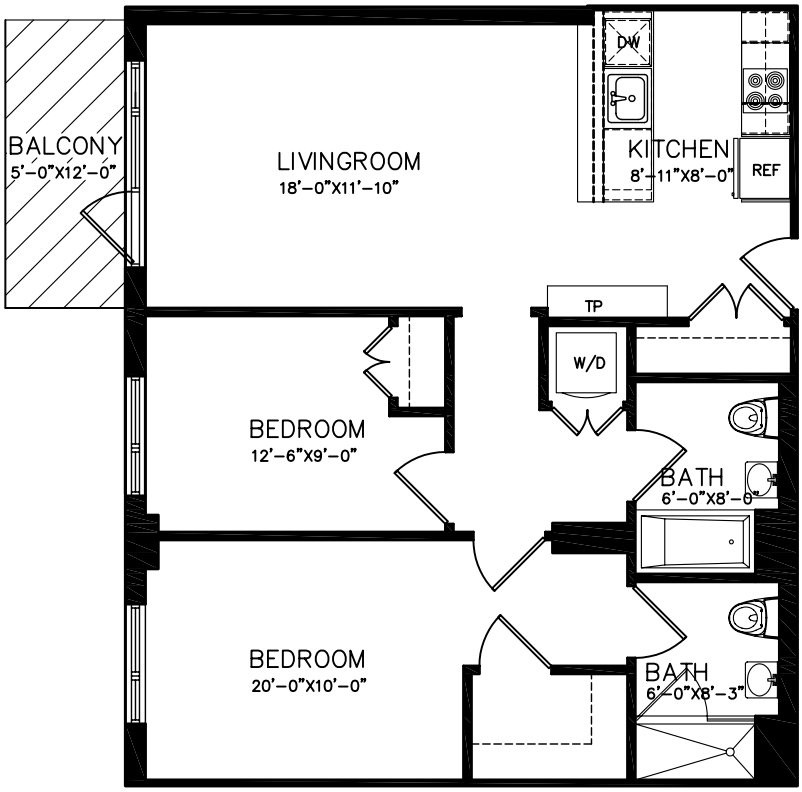

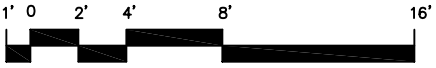

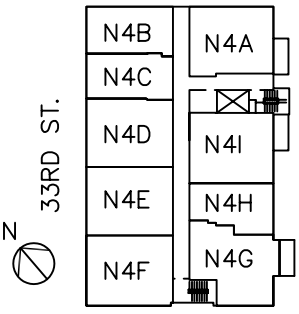

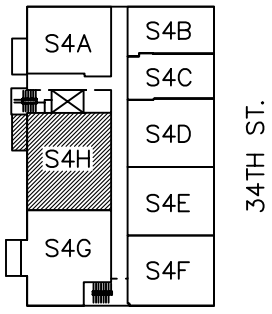

LEGEND :
DW – DISHWASHER
REF – REFRIGERATOR
TP – TALL PANTRY
W/D – WASHER / DRYER

THE 37–14 34TH STREET CONDOMINIUM
37–14 34th STREET
LONG ISLAND CITY, NY 11101

RESIDENCE S4H

FLOOR : 4
LIVINGROOM
2 BEDROOMS
2 BATHROOMS
BALCONY

INTERIOR : 909.2 SF
BALCONY : 60 SF
UNIT TOTAL : 969.2 SF

The Unit Layout square footage and dimensions are approximate and subject to normal construction variances and tolerances, Square footages exceed the usable floor area. This floor plan is based on construction drawings, minor inaccuracies between this floor plan and the actual Unit layout when built will not excuse a purchaser from completing the purchase of a Unit without abatement in price and without recourse against the Sponsor. Sponsor reserves the right to make changes in accordance with the Offering Plan.

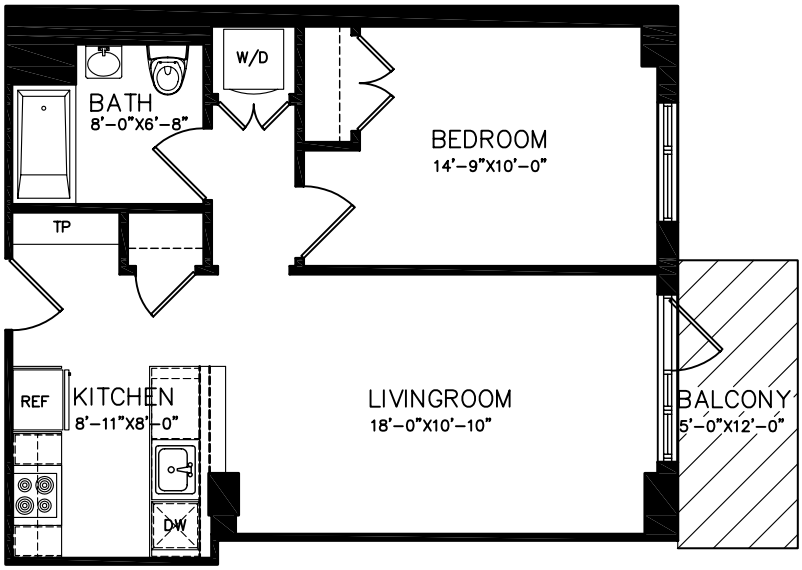

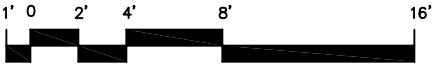

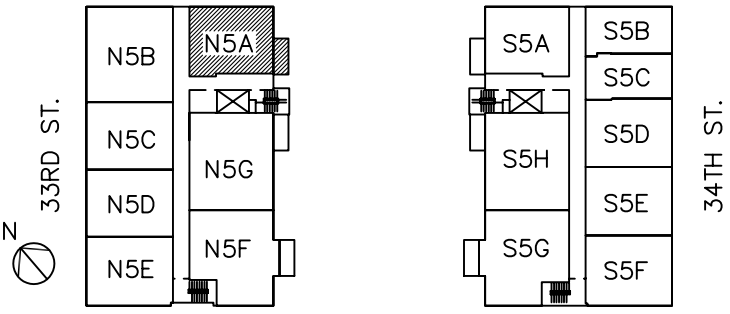

LEGEND :
DW – DISHWASHER
REF – REFRIGERATOR
TP – TALL PANTRY
W/D – WASHER / DRYER

THE 37–14 34TH STREET CONDOMINIUM
37–14 34th STREET
LONG ISLAND CITY, NY 11101

RESIDENCE N5A

FLOOR : 5
LIVINGROOM
1 BEDROOM
1 BATHROOM
BALCONY

INTERIOR : 631.8 SF
BALCONY : 60 SF
UNIT TOTAL : 691.8 SF

The Unit Layout square footage and dimensions are approximate and subject to normal construction variances and tolerances, Square footages exceed the usable floor area. This floor plan is based on construction drawings, minor inaccuracies between this floor plan and the actual Unit layout when built will not excuse a purchaser from completing the purchase of a Unit without abatement in price and without recourse against the Sponsor. Sponsor reserves the right to make changes in accordance with the Offering Plan.

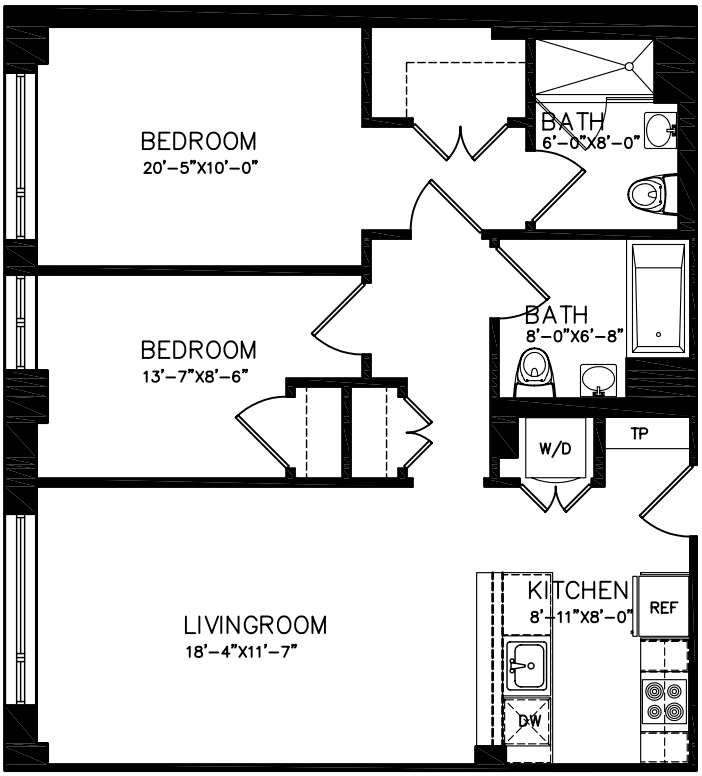

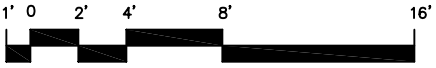

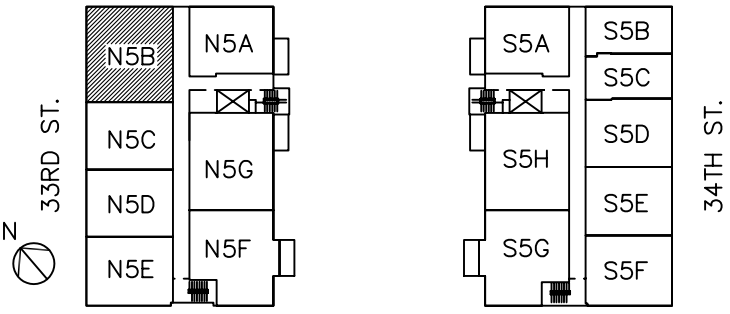

LEGEND :
DW – DISHWASHER
REF – REFRIGERATOR
TP – TALL PANTRY
W/D – WASHER / DRYER

THE 37–14 34TH STREET CONDOMINIUM
37–14 34th STREET
LONG ISLAND CITY, NY 11101

RESIDENCE N5B

FLOOR : 5
LIVINGROOM
2 BEDROOMS
2 BATHROOMS

INTERIOR : 917.8 SF
UNIT TOTAL : 917.8 SF

The Unit Layout square footage and dimensions are approximate and subject to normal construction variances and tolerances, Square footages exceed the usable floor area. This floor plan is based on construction drawings, minor inaccuracies between this floor plan and the actual Unit layout when built will not excuse a purchaser from completing the purchase of a Unit without abatement in price and without recourse against the Sponsor. Sponsor reserves the right to make changes in accordance with the Offering Plan.

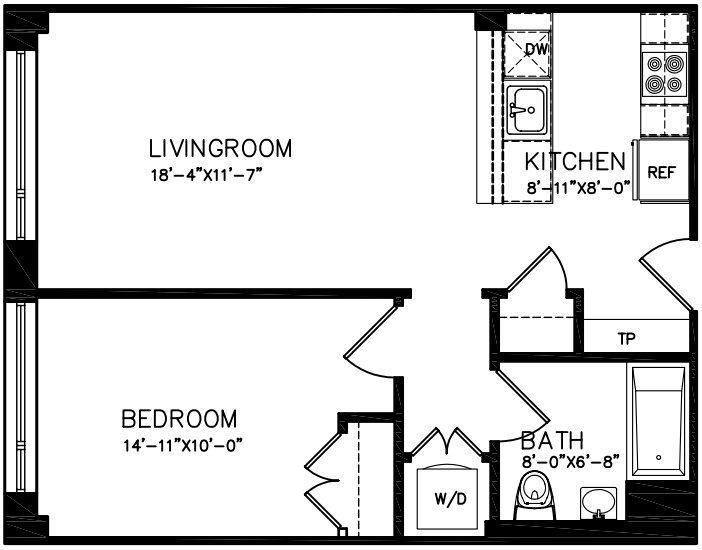

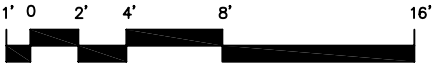

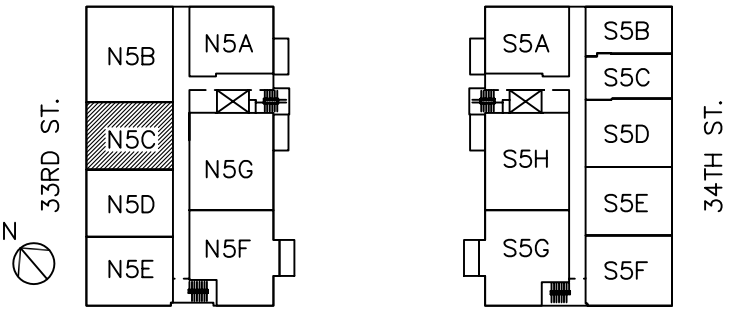

LEGEND :
DW – DISHWASHER
REF – REFRIGERATOR
TP – TALL PANTRY
W/D – WASHER / DRYER

THE 37-14 34TH STREET CONDOMINIUM
37-14 34th STREET
LONG ISLAND CITY, NY 11101

RESIDENCE N5C

FLOOR : 5
LIVINGROOM
1 BEDROOM
1 BATHROOM

INTERIOR : 646.3 SF
UNIT TOTAL : 646.3 SF

The Unit Layout square footage and dimensions are approximate and subject to normal construction variances and tolerances, Square footages exceed the usable floor area. This floor plan is based on construction drawings, minor inaccuracies between this floor plan and the actual Unit layout when built will not excuse a purchaser from completing the purchase of a Unit without abatement in price and without recourse against the Sponsor. Sponsor reserves the right to make changes in accordance with the Offering Plan.

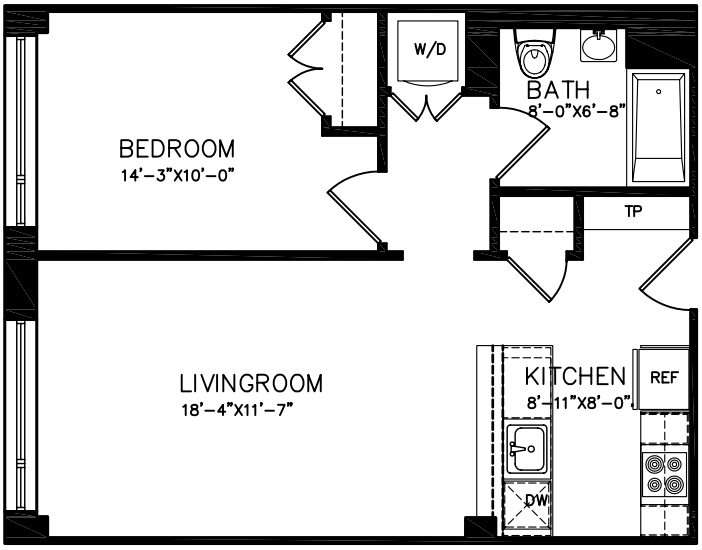

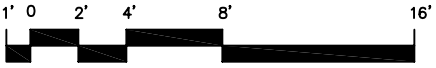

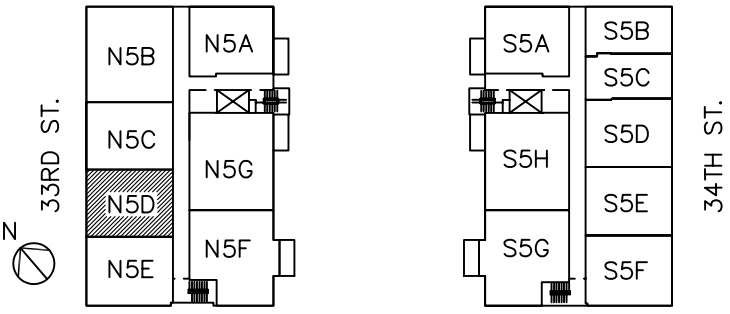

LEGEND :
DW – DISHWASHER
REF – REFRIGERATOR
TP – TALL PANTRY
W/D – WASHER / DRYER

THE 37–14 34TH STREET CONDOMINIUM
37–14 34th STREET
LONG ISLAND CITY, NY 11101

RESIDENCE N5D

FLOOR : 5
LIVINGROOM
1 BEDROOM
1 BATHROOM

INTERIOR : 646.3 SF
UNIT TOTAL : 646.3 SF

The Unit Layout square footage and dimensions are approximate and subject to normal construction variances and tolerances, Square footages exceed the usable floor area. This floor plan is based on construction drawings, minor inaccuracies between this floor plan and the actual Unit layout when built will not excuse a purchaser from completing the purchase of a Unit without abatement in price and without recourse against the Sponsor. Sponsor reserves the right to make changes in accordance with the Offering Plan.

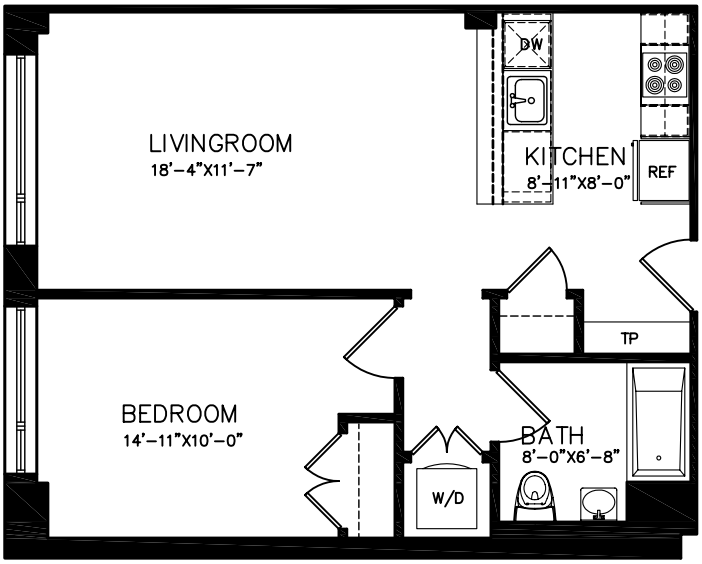

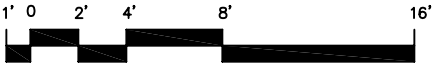

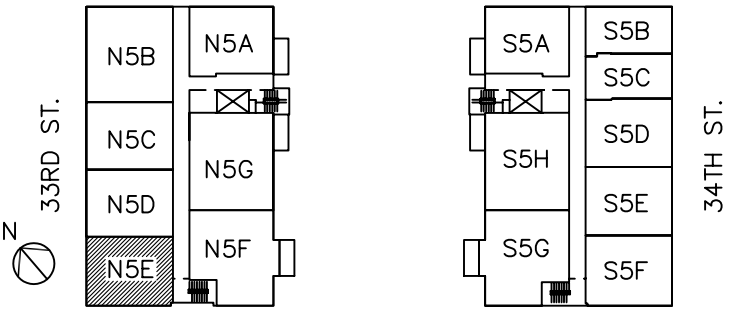

LEGEND :
DW – DISHWASHER
REF – REFRIGERATOR
TP – TALL PANTRY
W/D – WASHER / DRYER

THE 37-14 34TH STREET CONDOMINIUM
37-14 34th STREET
LONG ISLAND CITY, NY 11101

RESIDENCE N5E

FLOOR : 5
LIVINGROOM
1 BEDROOM
1 BATHROOM

INTERIOR : 662.5 SF
UNIT TOTAL : 662.5 SF

The Unit Layout square footage and dimensions are approximate and subject to normal construction variances and tolerances, Square footages exceed the usable floor area. This floor plan is based on construction drawings, minor inaccuracies between this floor plan and the actual Unit layout when built will not excuse a purchaser from completing the purchase of a Unit without abatement in price and without recourse against the Sponsor. Sponsor reserves the right to make changes in accordance with the Offering Plan.

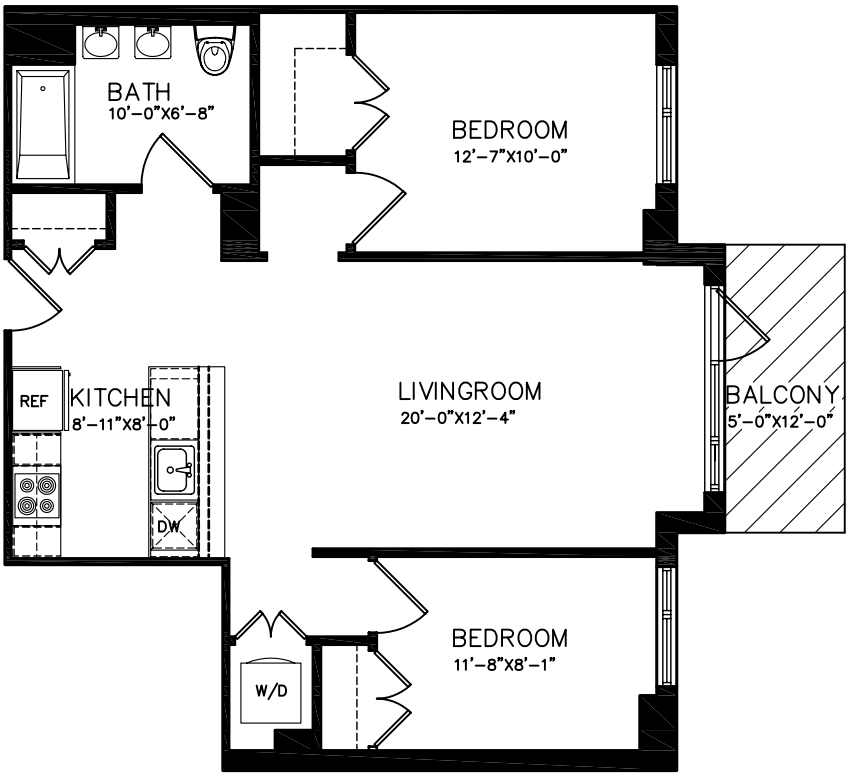

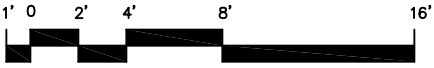

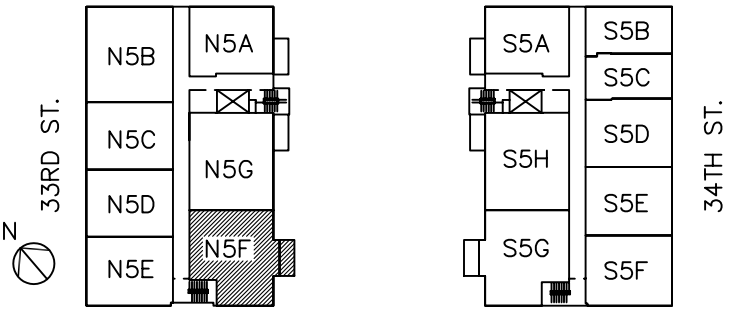

LEGEND :
DW – DISHWASHER
REF – REFRIGERATOR
TP – TALL PANTRY
W/D – WASHER / DRYER

THE 37–14 34TH STREET CONDOMINIUM
37–14 34th STREET
LONG ISLAND CITY, NY 11101

RESIDENCE N5F

FLOOR : 5
LIVINGROOM
2 BEDROOMS
1 BATHROOM
BALCONY

INTERIOR : 837.3 SF
BALCONY : 60 SF
UNIT TOTAL : 897.3 SF

The Unit Layout square footage and dimensions are approximate and subject to normal construction variances and tolerances, Square footages exceed the usable floor area. This floor plan is based on construction drawings, minor inaccuracies between this floor plan and the actual Unit layout when built will not excuse a purchaser from completing the purchase of a Unit without abatement in price and without recourse against the Sponsor. Sponsor reserves the right to make changes in accordance with the Offering Plan.

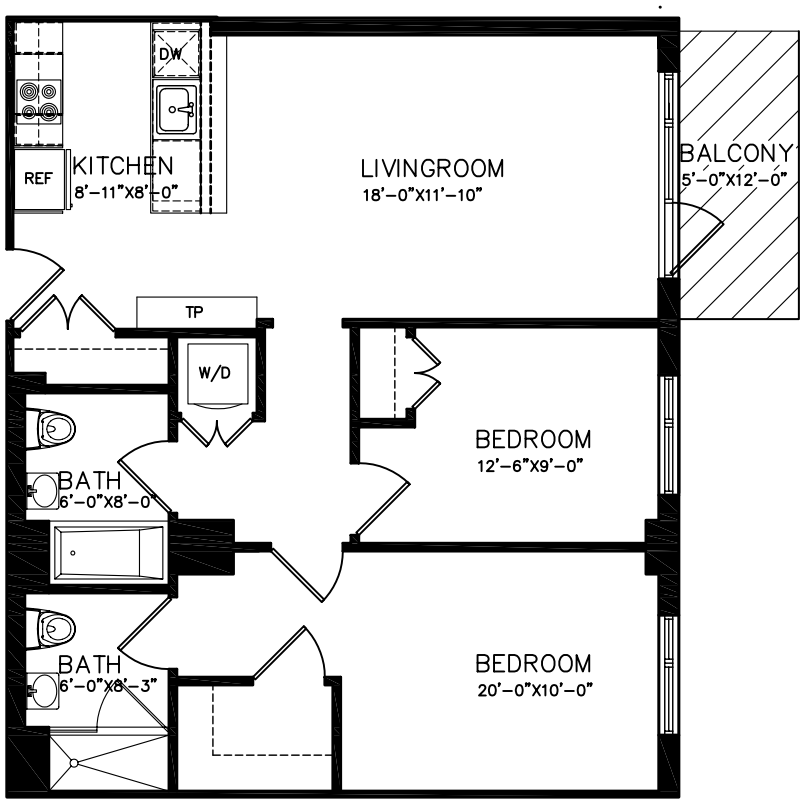

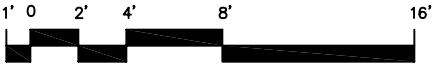

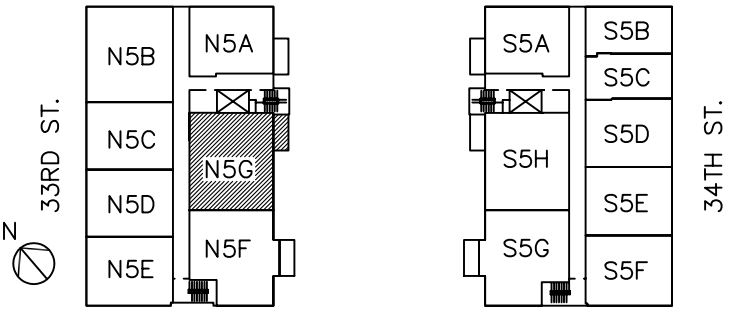

LEGEND :
DW – DISHWASHER
REF – REFRIGERATOR
TP – TALL PANTRY
W/D – WASHER / DRYER

THE 37–14 34TH STREET CONDOMINIUM
37–14 34th STREET
LONG ISLAND CITY, NY 11101

RESIDENCE N5G

FLOOR : 5
LIVINGROOM
2 BEDROOMS
2 BATHROOMS
BALCONY

INTERIOR : 909.2 SF
BALCONY : 60 SF
UNIT TOTAL : 969.2 SF

The Unit Layout square footage and dimensions are approximate and subject to normal construction variances and tolerances, Square footages exceed the usable floor area. This floor plan is based on construction drawings, minor inaccuracies between this floor plan and the actual Unit layout when built will not excuse a purchaser from completing the purchase of a Unit without abatement in price and without recourse against the Sponsor. Sponsor reserves the right to make changes in accordance with the Offering Plan.

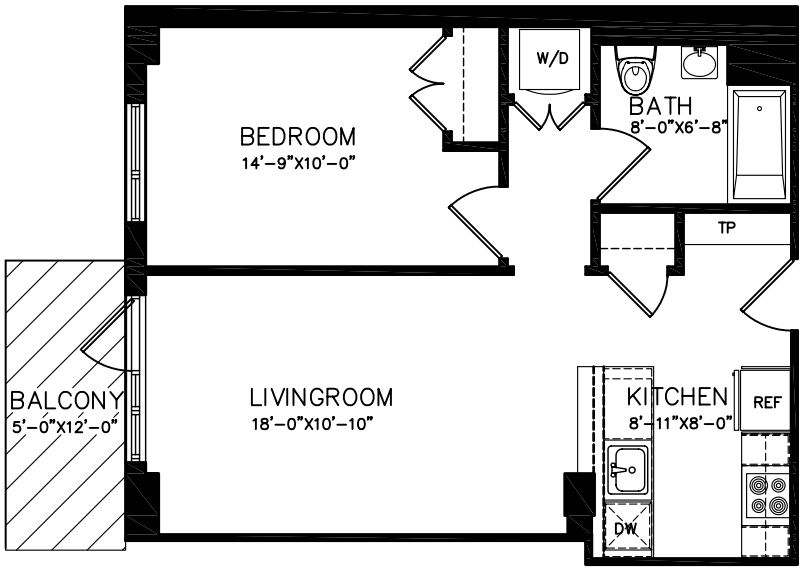

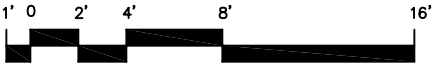

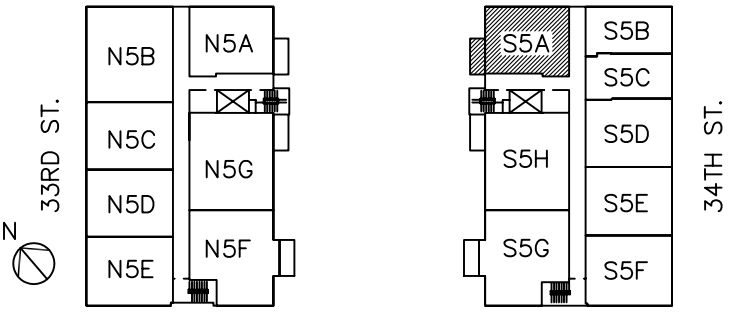

LEGEND :
DW – DISHWASHER
REF – REFRIGERATOR
TP – TALL PANTRY
W/D – WASHER / DRYER

THE 37-14 34TH STREET CONDOMINIUM
37-14 34th STREET
LONG ISLAND CITY, NY 11101

RESIDENCE S5A

FLOOR : 5
LIVINGROOM
1 BEDROOM
1 BATHROOM
BALCONY

INTERIOR : 631.8 SF
BALCONY : 60 SF
UNIT TOTAL : 691.8 SF

The Unit Layout square footage and dimensions are approximate and subject to normal construction variances and tolerances, Square footages exceed the usable floor area. This floor plan is based on construction drawings, minor inaccuracies between this floor plan and the actual Unit layout when built will not excuse a purchaser from completing the purchase of a Unit without abatement in price and without recourse against the Sponsor. Sponsor reserves the right to make changes in accordance with the Offering Plan.

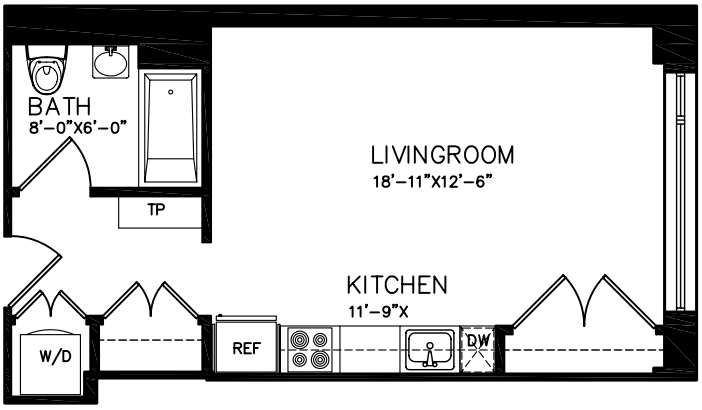

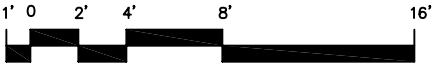

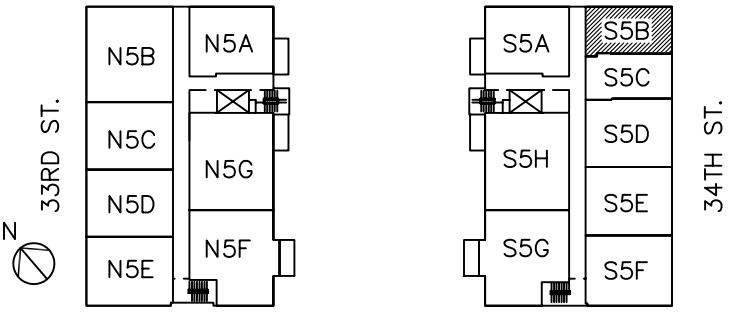

LEGEND :
DW – DISHWASHER
REF – REFRIGERATOR
TP – TALL PANTRY
W/D – WASHER / DRYER

THE 37-14 34TH STREET CONDOMINIUM
37-14 34th STREET
LONG ISLAND CITY, NY 11101

RESIDENCE S5B

FLOOR : 5
LIVINGROOM
1 BATHROOM

INTERIOR : 453.0 SF
UNIT TOTAL : 453.0 SF

The Unit Layout square footage and dimensions are approximate and subject to normal construction variances and tolerances, Square footages exceed the usable floor area. This floor plan is based on construction drawings, minor inaccuracies between this floor plan and the actual Unit layout when built will not excuse a purchaser from completing the purchase of a Unit without abatement in price and without recourse against the Sponsor. Sponsor reserves the right to make changes in accordance with the Offering Plan.

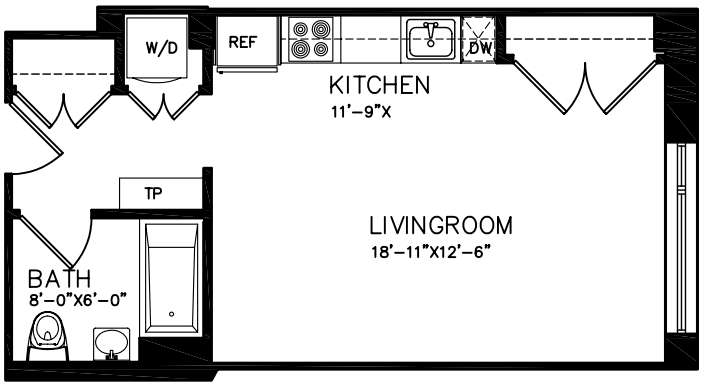

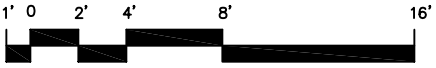

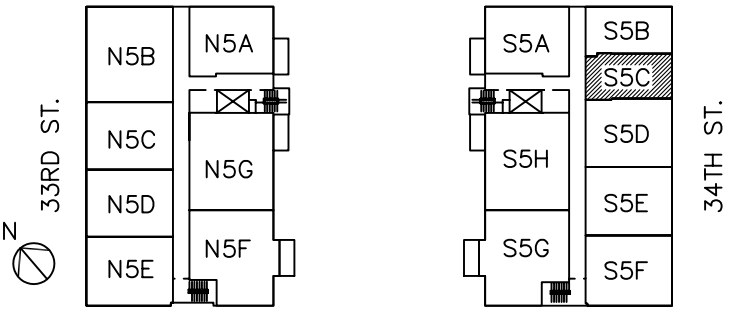

LEGEND :
DW – DISHWASHER
REF – REFRIGERATOR
TP – TALL PANTRY
W/D – WASHER / DRYER

THE 37–14 34TH STREET CONDOMINIUM
37–14 34th STREET
LONG ISLAND CITY, NY 11101

RESIDENCE S5C

FLOOR : 5
LIVINGROOM
1 BATHROOM

INTERIOR : 435.0 SF
UNIT TOTAL : 435.0 SF

The Unit Layout square footage and dimensions are approximate and subject to normal construction variances and tolerances, Square footages exceed the usable floor area. This floor plan is based on construction drawings, minor inaccuracies between this floor plan and the actual Unit layout when built will not excuse a purchaser from completing the purchase of a Unit without abatement in price and without recourse against the Sponsor. Sponsor reserves the right to make changes in accordance with the Offering Plan.

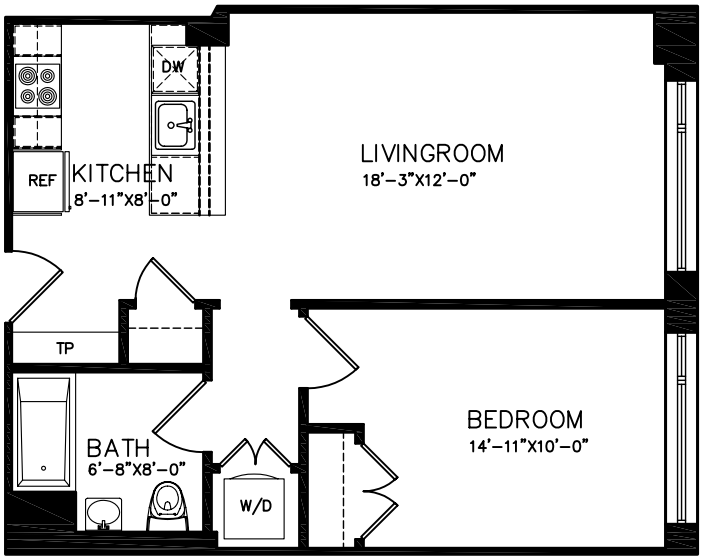

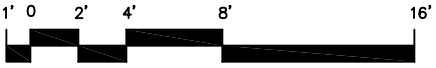

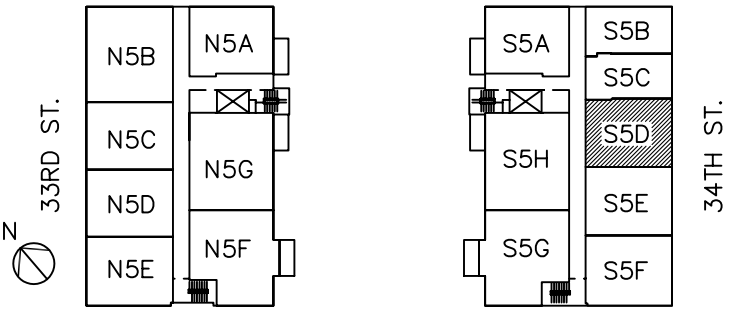

LEGEND :
DW – DISHWASHER
REF – REFRIGERATOR
TP – TALL PANTRY
W/D – WASHER / DRYER

THE 37–14 34TH STREET CONDOMINIUM
37–14 34th STREET
LONG ISLAND CITY, NY 11101

RESIDENCE S5D

FLOOR : 5
LIVINGROOM
1 BEDROOM
1 BATHROOM

INTERIOR : 652.0 SF
UNIT TOTAL : 652.0 SF

The Unit Layout square footage and dimensions are approximate and subject to normal construction variances and tolerances, Square footages exceed the usable floor area. This floor plan is based on construction drawings, minor inaccuracies between this floor plan and the actual Unit layout when built will not excuse a purchaser from completing the purchase of a Unit without abatement in price and without recourse against the Sponsor. Sponsor reserves the right to make changes in accordance with the Offering Plan.

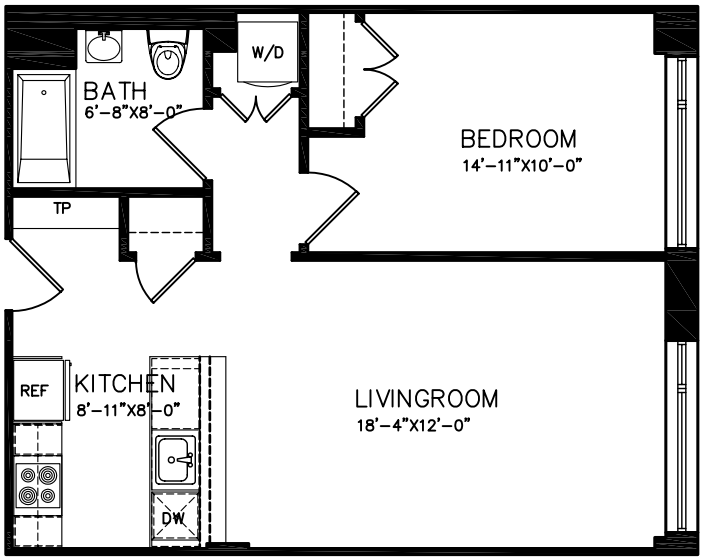

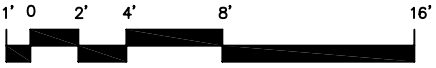

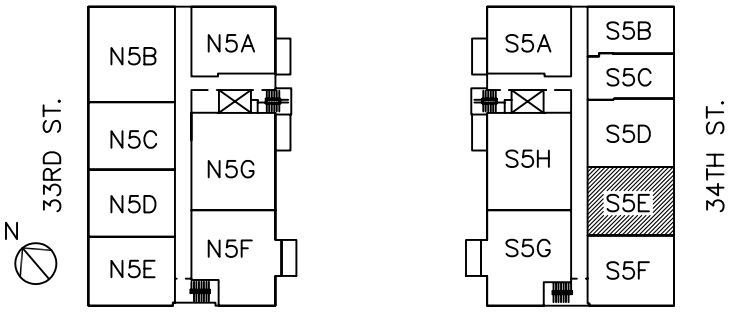

LEGEND :
DW – DISHWASHER
REF – REFRIGERATOR
TP – TALL PANTRY
W/D – WASHER / DRYER

THE 37-14 34TH STREET CONDOMINIUM
37-14 34th STREET
LONG ISLAND CITY, NY 11101

RESIDENCE S5E

FLOOR : 5
LIVINGROOM
1 BEDROOM
1 BATHROOM

INTERIOR : 658.3 SF
UNIT TOTAL : 658.3 SF

The Unit Layout square footage and dimensions are approximate and subject to normal construction variances and tolerances, Square footages exceed the usable floor area. This floor plan is based on construction drawings, minor inaccuracies between this floor plan and the actual Unit layout when built will not excuse a purchaser from completing the purchase of a Unit without abatement in price and without recourse against the Sponsor. Sponsor reserves the right to make changes in accordance with the Offering Plan.

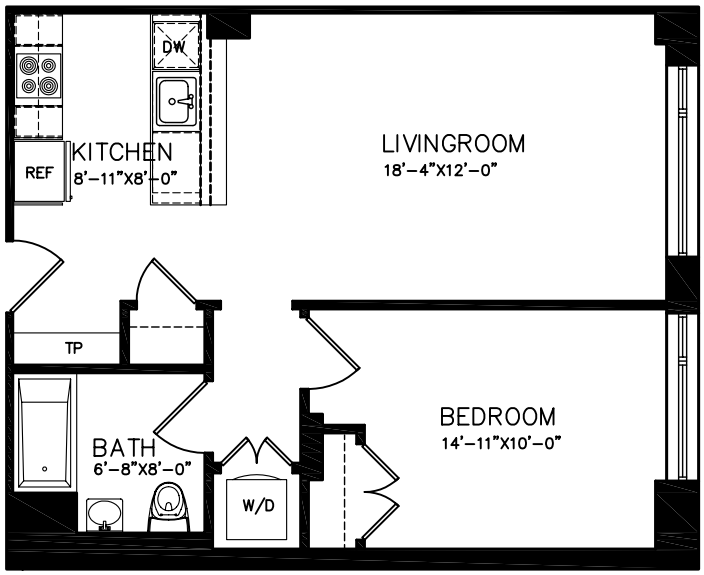

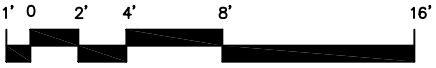

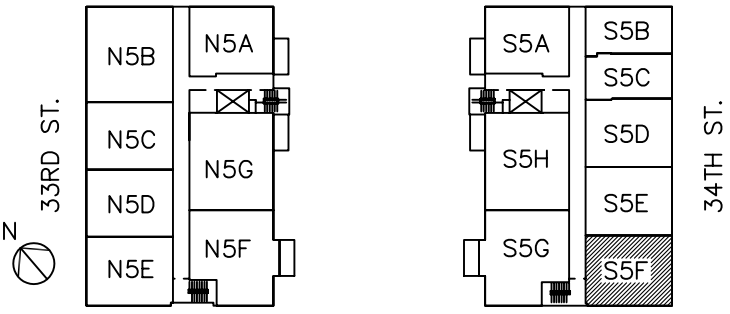

LEGEND :
DW – DISHWASHER
REF – REFRIGERATOR
TP – TALL PANTRY
W/D – WASHER / DRYER

THE 37–14 34TH STREET CONDOMINIUM
37–14 34th STREET
LONG ISLAND CITY, NY 11101

RESIDENCE S5F

FLOOR : 5
LIVINGROOM
1 BEDROOM
1 BATHROOM

INTERIOR : 675.1 SF
UNIT TOTAL : 675.1 SF

The Unit Layout square footage and dimensions are approximate and subject to normal construction variances and tolerances, Square footages exceed the usable floor area. This floor plan is based on construction drawings, minor inaccuracies between this floor plan and the actual Unit layout when built will not excuse a purchaser from completing the purchase of a Unit without abatement in price and without recourse against the Sponsor. Sponsor reserves the right to make changes in accordance with the Offering Plan.

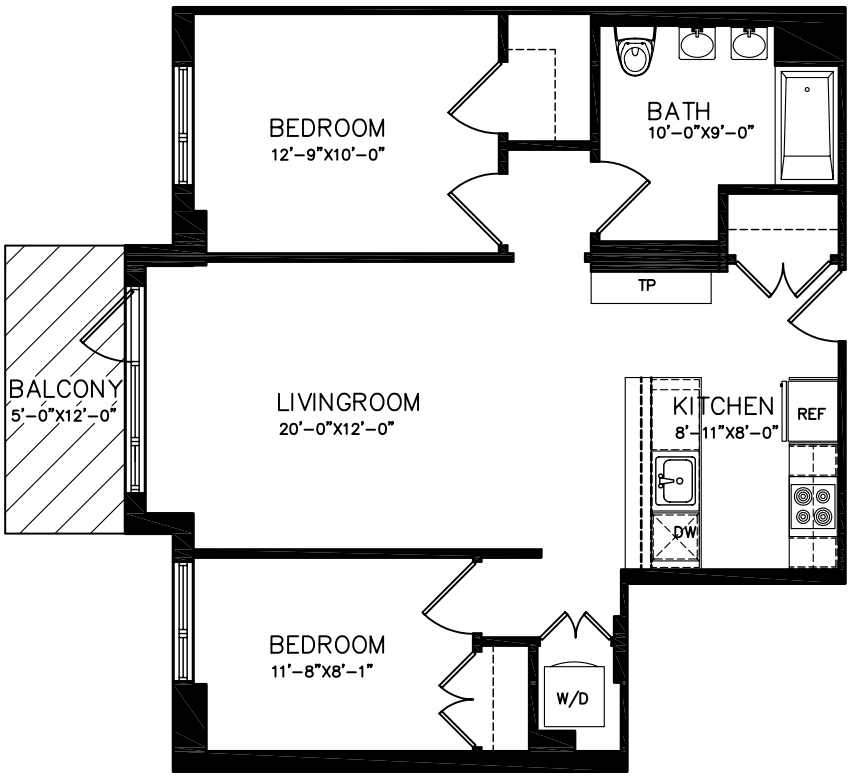

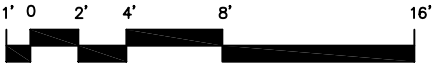

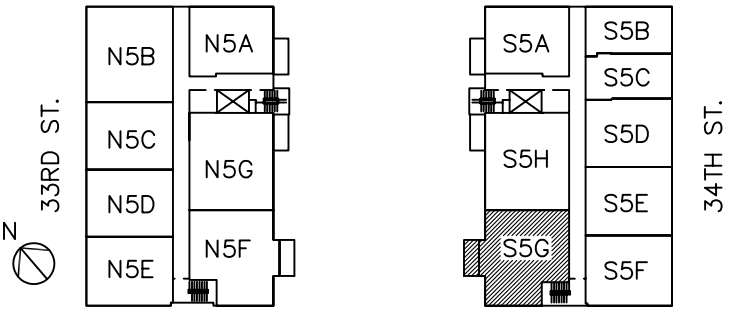

LEGEND :
DW – DISHWASHER
REF – REFRIGERATOR
TP – TALL PANTRY
W/D – WASHER / DRYER

THE 37–14 34TH STREET CONDOMINIUM
37–14 34th STREET
LONG ISLAND CITY, NY 11101

RESIDENCE S5G

FLOOR : 5
LIVINGROOM
2 BEDROOMS
1 BATHROOM
BALCONY

INTERIOR : 844.1 SF
BALCONY : 60 SF
UNIT TOTAL : 904.1 SF

The Unit Layout square footage and dimensions are approximate and subject to normal construction variances and tolerances, Square footages exceed the usable floor area. This floor plan is based on construction drawings, minor inaccuracies between this floor plan and the actual Unit layout when built will not excuse a purchaser from completing the purchase of a Unit without abatement in price and without recourse against the Sponsor. Sponsor reserves the right to make changes in accordance with the Offering Plan.

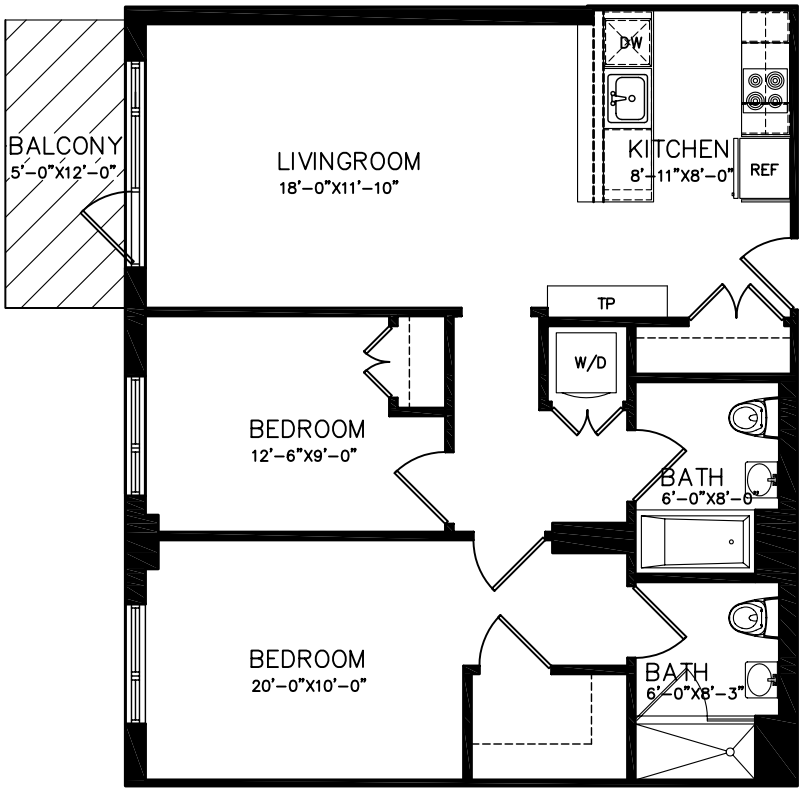

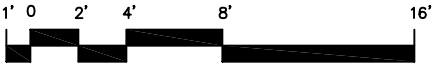

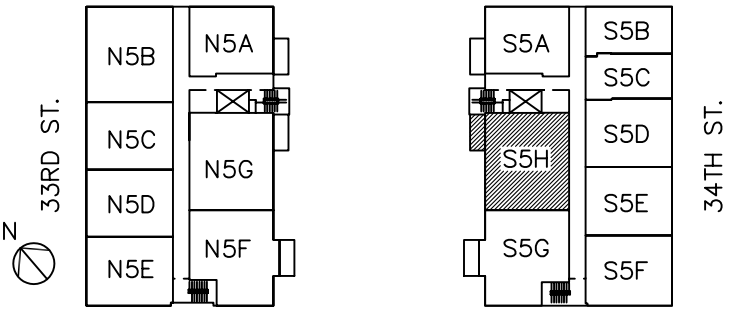

LEGEND :
DW – DISHWASHER
REF – REFRIGERATOR
TP – TALL PANTRY
W/D – WASHER / DRYER

THE 37–14 34TH STREET CONDOMINIUM
37–14 34th STREET
LONG ISLAND CITY, NY 11101

RESIDENCE S5H

FLOOR : 5
LIVINGROOM
2 BEDROOMS
2 BATHROOMS
BALCONY

INTERIOR : 909.2 SF
BALCONY : 60 SF
UNIT TOTAL : 969.2 SF

The Unit Layout square footage and dimensions are approximate and subject to normal construction variances and tolerances, Square footages exceed the usable floor area. This floor plan is based on construction drawings, minor inaccuracies between this floor plan and the actual Unit layout when built will not excuse a purchaser from completing the purchase of a Unit without abatement in price and without recourse against the Sponsor. Sponsor reserves the right to make changes in accordance with the Offering Plan.

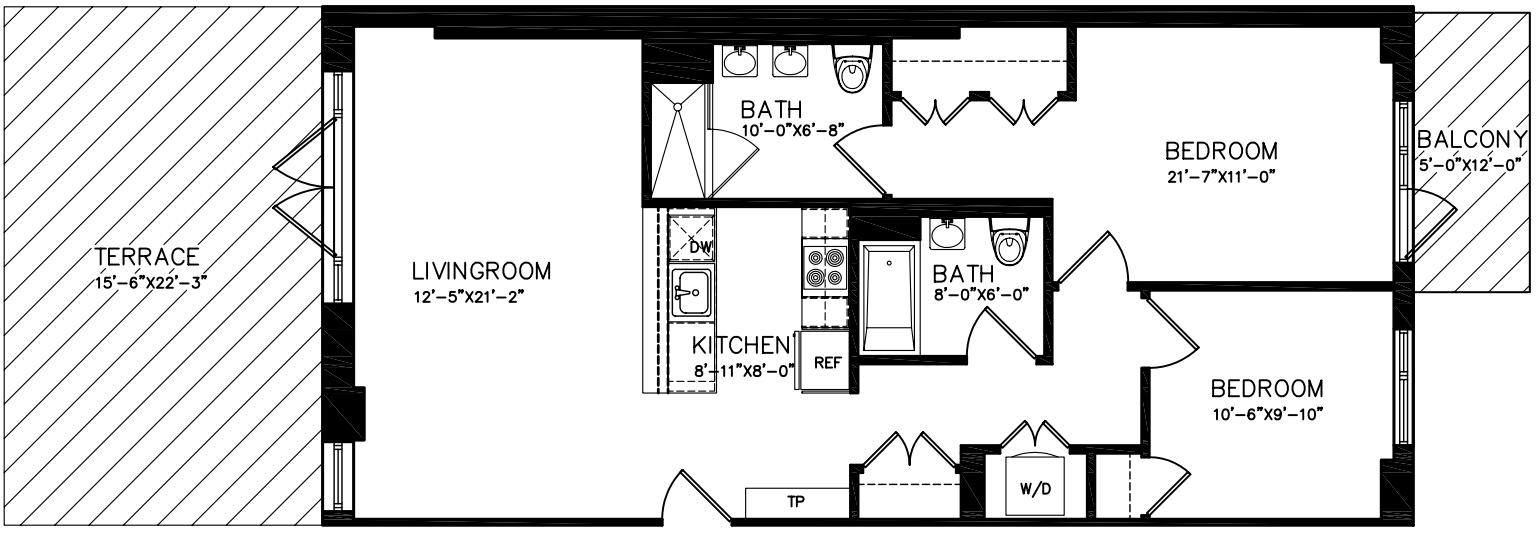

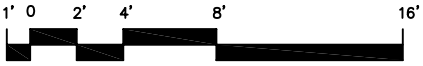

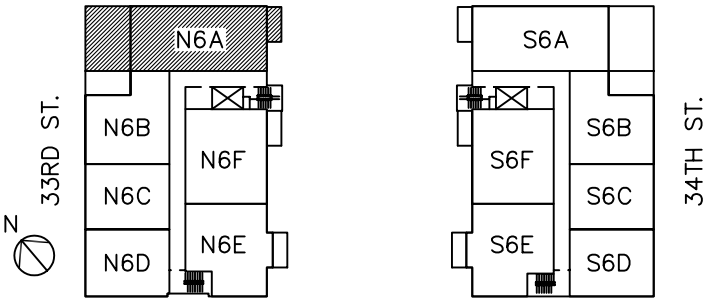

LEGEND :
DW – DISHWASHER
REF – REFRIGERATOR
TP – TALL PANTRY
W/D – WASHER / DRYER

THE 37–14 34TH STREET CONDOMINIUM
37–14 34th STREET
LONG ISLAND CITY, NY 11101

RESIDENCE N6A

FLOOR : 6
LIVINGROOM
2 BEDROOMS
2 BATHROOMS
TERRACE
BALCONY

INTERIOR : 1,042.0 SF
TERRACE : 344.8 SF
BALCONY : 60 SF
UNIT TOTAL : 1,446.8 SF

The Unit Layout square footage and dimensions are approximate and subject to normal construction variances and tolerances, Square footages exceed the usable floor area. This floor plan is based on construction drawings, minor inaccuracies between this floor plan and the actual Unit layout when built will not excuse a purchaser from completing the purchase of a Unit without abatement in price and without recourse against the Sponsor. Sponsor reserves the right to make changes in accordance with the Offering Plan.

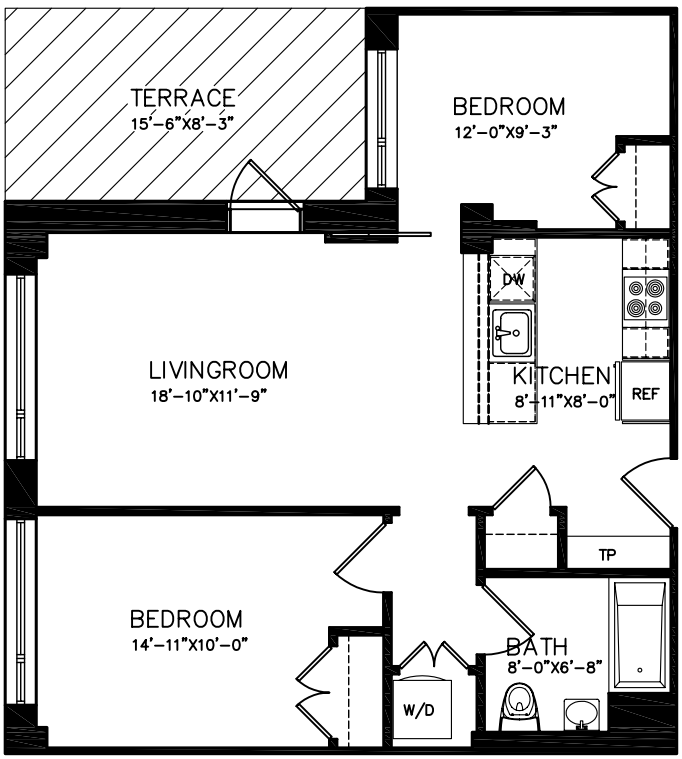

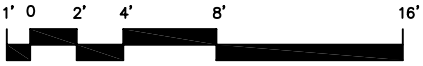

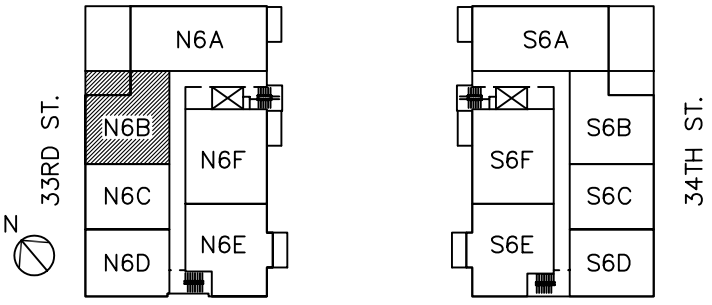

LEGEND :
DW – DISHWASHER
REF – REFRIGERATOR
TP – TALL PANTRY
W/D – WASHER / DRYER

THE 37–14 34TH STREET CONDOMINIUM
37–14 34th STREET
LONG ISLAND CITY, NY 11101

RESIDENCE N6B

FLOOR : 6
LIVINGROOM
2 BEDROOMS
1 BATHROOM
TERRACE

INTERIOR : 794.1 SF
TERRACE : 128.5 SF
UNIT TOTAL : 942.6 SF

The Unit Layout square footage and dimensions are approximate and subject to normal construction variances and tolerances, Square footages exceed the usable floor area. This floor plan is based on construction drawings, minor inaccuracies between this floor plan and the actual Unit layout when built will not excuse a purchaser from completing the purchase of a Unit without abatement in price and without recourse against the Sponsor. Sponsor reserves the right to make changes in accordance with the Offering Plan.

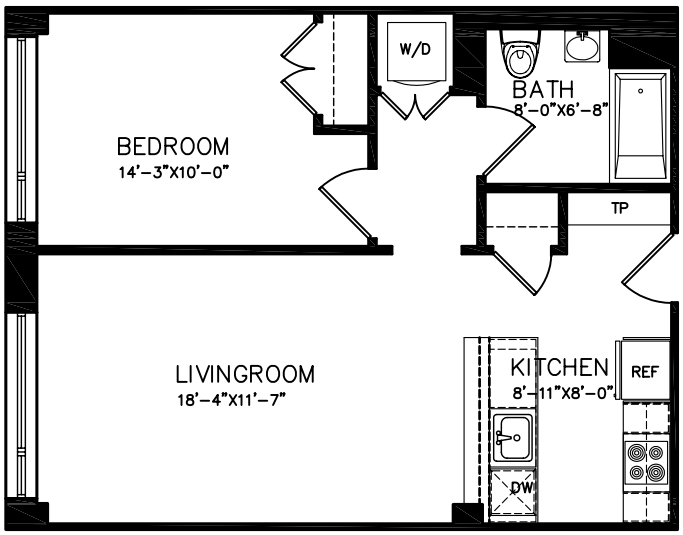

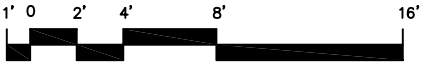

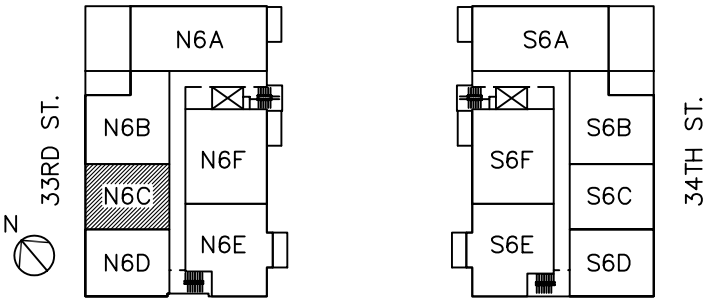

LEGEND :
DW – DISHWASHER
REF – REFRIGERATOR
TP – TALL PANTRY
W/D – WASHER / DRYER

THE 37–14 34TH STREET CONDOMINIUM
37–14 34th STREET
LONG ISLAND CITY, NY 11101

RESIDENCE N6C

FLOOR : 6
LIVINGROOM
1 BEDROOM
1 BATHROOM

INTERIOR : 646.3 SF
UNIT TOTAL : 646.3 SF

The Unit Layout square footage and dimensions are approximate and subject to normal construction variances and tolerances, Square footages exceed the usable floor area. This floor plan is based on construction drawings, minor inaccuracies between this floor plan and the actual Unit layout when built will not excuse a purchaser from completing the purchase of a Unit without abatement in price and without recourse against the Sponsor. Sponsor reserves the right to make changes in accordance with the Offering Plan.

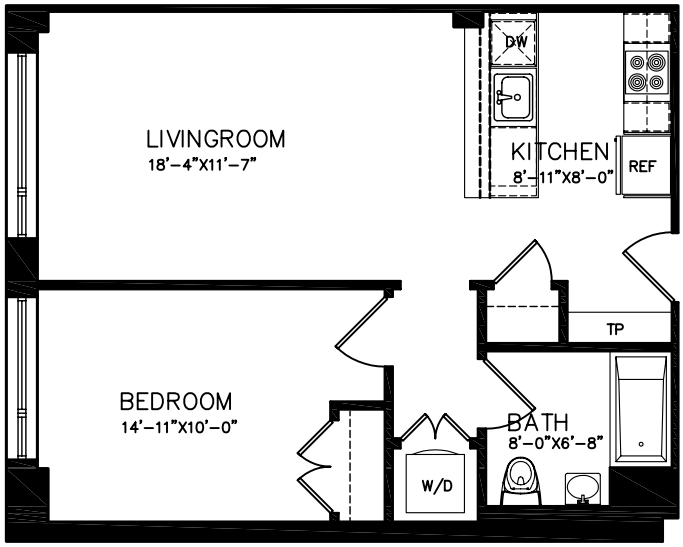

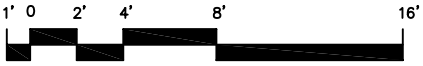

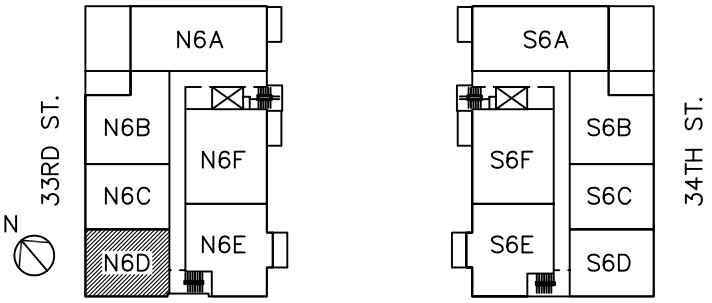

LEGEND :
DW – DISHWASHER
REF – REFRIGERATOR
TP – TALL PANTRY
W/D – WASHER / DRYER

THE 37-14 34TH STREET CONDOMINIUM
37-14 34th STREET
LONG ISLAND CITY, NY 11101

RESIDENCE N6D

FLOOR : 6
LIVINGROOM
1 BEDROOM
1 BATHROOM

INTERIOR : 662.5 SF
UNIT TOTAL : 662.5 SF

The Unit Layout square footage and dimensions are approximate and subject to normal construction variances and tolerances, Square footages exceed the usable floor area. This floor plan is based on construction drawings, minor inaccuracies between this floor plan and the actual Unit layout when built will not excuse a purchaser from completing the purchase of a Unit without abatement in price and without recourse against the Sponsor. Sponsor reserves the right to make changes in accordance with the Offering Plan.

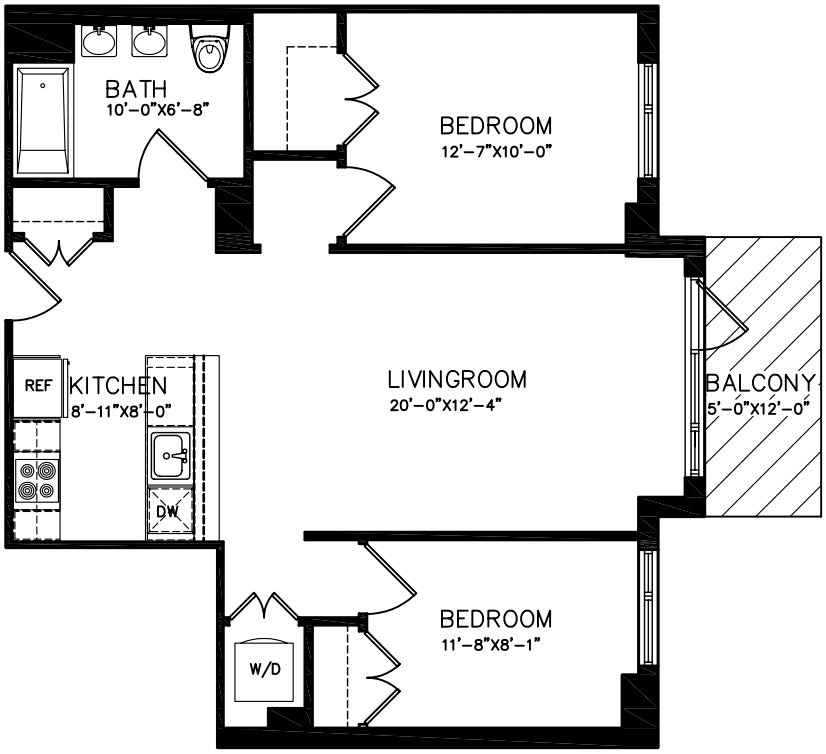

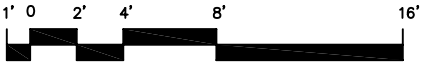

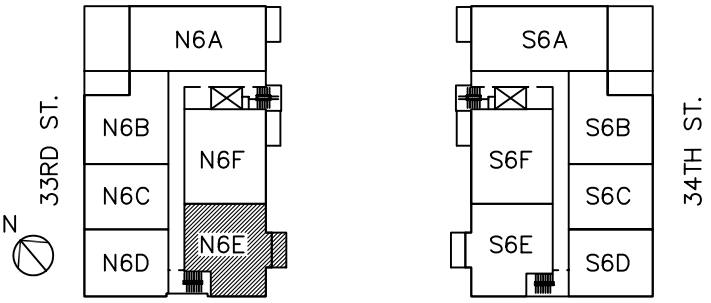

LEGEND :
DW – DISHWASHER
REF – REFRIGERATOR
TP – TALL PANTRY
W/D – WASHER / DRYER

THE 37–14 34TH STREET CONDOMINIUM
37–14 34th STREET
LONG ISLAND CITY, NY 11101

RESIDENCE N6E

FLOOR : 6
LIVINGROOM
2 BEDROOMS
1 BATHROOM
BALCONY

INTERIOR : 837.3 SF
BALCONY : 60 SF
UNIT TOTAL : 897.3 SF

The Unit Layout square footage and dimensions are approximate and subject to normal construction variances and tolerances, Square footages exceed the usable floor area. This floor plan is based on construction drawings, minor inaccuracies between this floor plan and the actual Unit layout when built will not excuse a purchaser from completing the purchase of a Unit without abatement in price and without recourse against the Sponsor. Sponsor reserves the right to make changes in accordance with the Offering Plan.

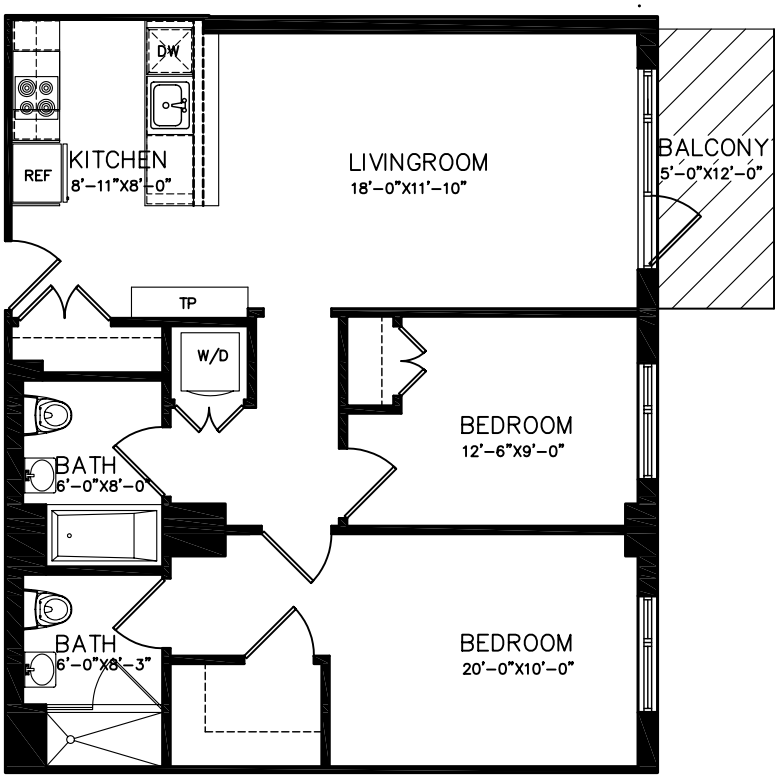

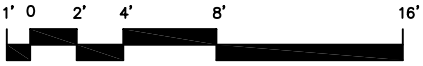

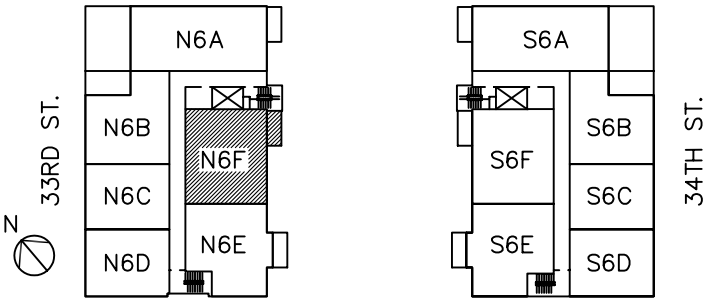

LEGEND :
DW – DISHWASHER
REF – REFRIGERATOR
TP – TALL PANTRY
W/D – WASHER / DRYER

THE 37–14 34TH STREET CONDOMINIUM
37–14 34th STREET
LONG ISLAND CITY, NY 11101

RESIDENCE N6F

FLOOR : 6
LIVINGROOM
2 BEDROOMS
2 BATHROOMS
BALCONY

INTERIOR : 909.2 SF
BALCONY : 60 SF
UNIT TOTAL : 969.2 SF

The Unit Layout square footage and dimensions are approximate and subject to normal construction variances and tolerances, Square footages exceed the usable floor area. This floor plan is based on construction drawings, minor inaccuracies between this floor plan and the actual Unit layout when built will not excuse a purchaser from completing the purchase of a Unit without abatement in price and without recourse against the Sponsor. Sponsor reserves the right to make changes in accordance with the Offering Plan.

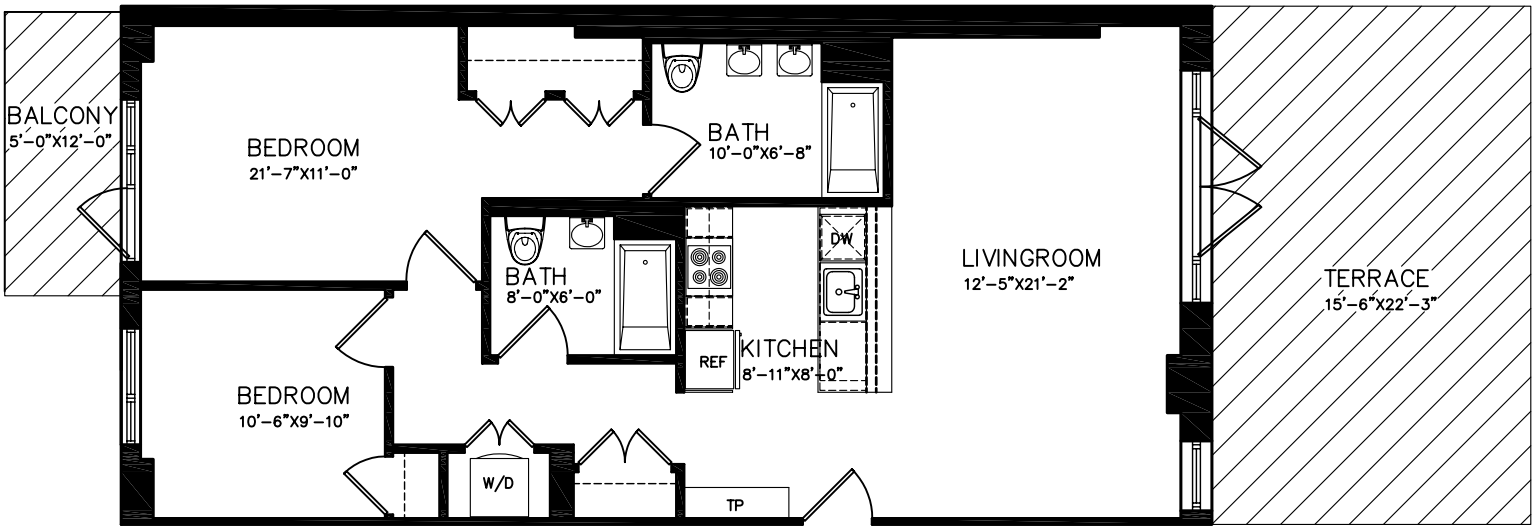

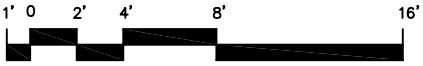

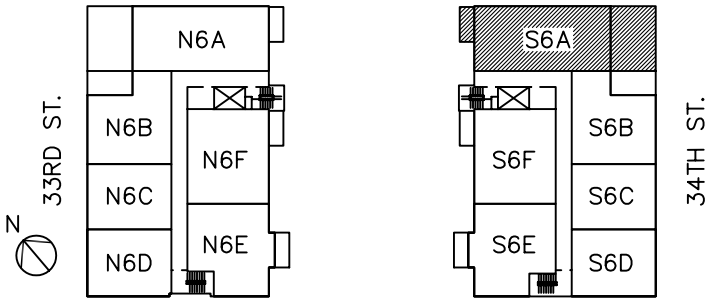

LEGEND :
DW – DISHWASHER
REF – REFRIGERATOR
TP – TALL PANTRY
W/D – WASHER / DRYER

THE 37–14 34TH STREET CONDOMINIUM
37–14 34th STREET
LONG ISLAND CITY, NY 11101

RESIDENCE S6A

FLOOR : 6
LIVINGROOM
2 BEDROOMS
2 BATHROOMS
TERRACE
BALCONY

INTERIOR : 1,042.0 SF
TERRACE : 344.8 SF
BALCONY : 60 SF
UNIT TOTAL : 1,446.8 SF

The Unit Layout square footage and dimensions are approximate and subject to normal construction variances and tolerances, Square footages exceed the usable floor area. This floor plan is based on construction drawings, minor inaccuracies between this floor plan and the actual Unit layout when built will not excuse a purchaser from completing the purchase of a Unit without abatement in price and without recourse against the Sponsor. Sponsor reserves the right to make changes in accordance with the Offering Plan.

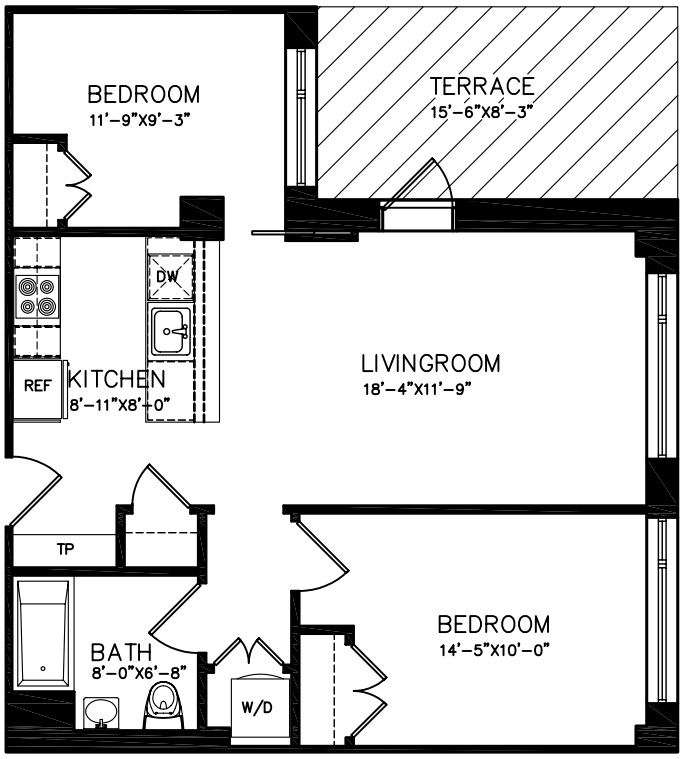

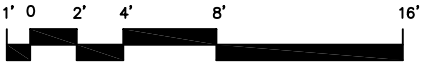

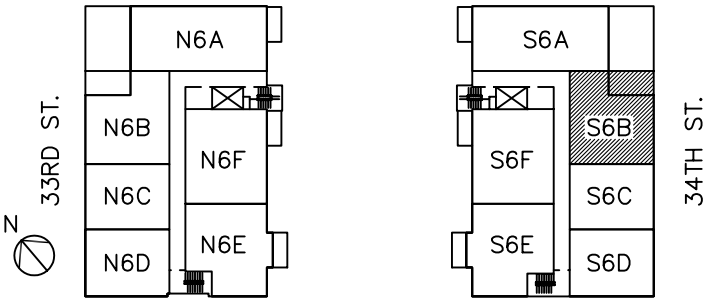

LEGEND :
DW – DISHWASHER
REF – REFRIGERATOR
TP – TALL PANTRY
W/D – WASHER / DRYER

THE 37–14 34TH STREET CONDOMINIUM
37–14 34th STREET
LONG ISLAND CITY, NY 11101

RESIDENCE S6B

FLOOR : 6
LIVINGROOM
2 BEDROOMS
1 BATHROOM
TERRACE

INTERIOR : 794.1 SF
TERRACE : 128.5 SF
UNIT TOTAL : 942.6 SF

The Unit Layout square footage and dimensions are approximate and subject to normal construction variances and tolerances, Square footages exceed the usable floor area. This floor plan is based on construction drawings, minor inaccuracies between this floor plan and the actual Unit layout when built will not excuse a purchaser from completing the purchase of a Unit without abatement in price and without recourse against the Sponsor. Sponsor reserves the right to make changes in accordance with the Offering Plan.

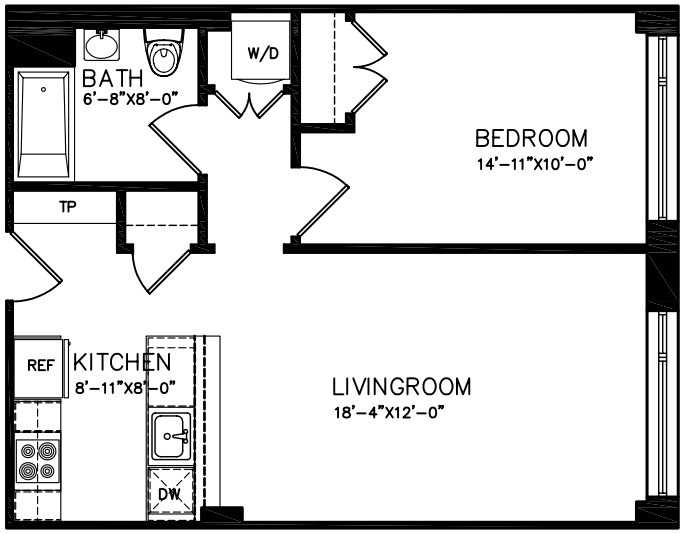

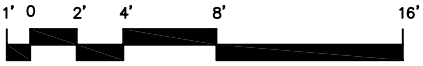

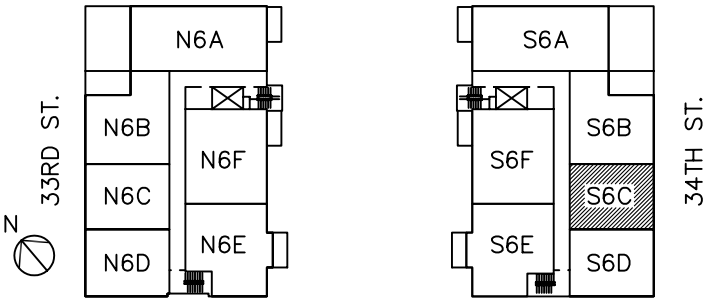

LEGEND :
DW – DISHWASHER
REF – REFRIGERATOR
TP – TALL PANTRY
W/D – WASHER / DRYER

THE 37-14 34TH STREET CONDOMINIUM
37-14 34th STREET
LONG ISLAND CITY, NY 11101

RESIDENCE S6C

FLOOR : 6
LIVINGROOM
1 BEDROOM
1 BATHROOM

INTERIOR : 646.3 SF
UNIT TOTAL : 646.3 SF

The Unit Layout square footage and dimensions are approximate and subject to normal construction variances and tolerances, Square footages exceed the usable floor area. This floor plan is based on construction drawings, minor inaccuracies between this floor plan and the actual Unit layout when built will not excuse a purchaser from completing the purchase of a Unit without abatement in price and without recourse against the Sponsor. Sponsor reserves the right to make changes in accordance with the Offering Plan.

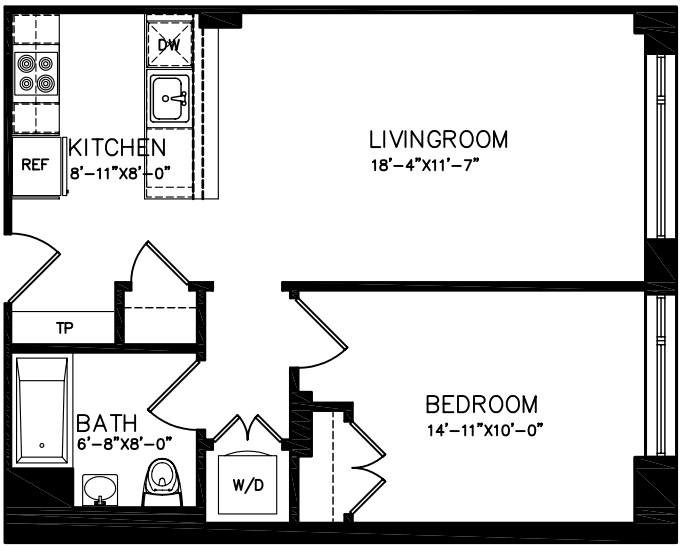

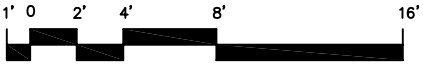

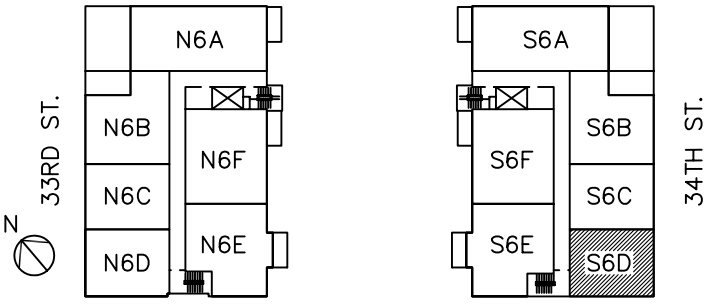

LEGEND :
DW – DISHWASHER
REF – REFRIGERATOR
TP – TALL PANTRY
W/D – WASHER / DRYER

THE 37–14 34TH STREET CONDOMINIUM
37–14 34th STREET
LONG ISLAND CITY, NY 11101

RESIDENCE S6D

FLOOR : 6
LIVINGROOM
1 BEDROOM
1 BATHROOM

INTERIOR : 663.1 SF
UNIT TOTAL : 663.1 SF

The Unit Layout square footage and dimensions are approximate and subject to normal construction variances and tolerances, Square footages exceed the usable floor area. This floor plan is based on construction drawings, minor inaccuracies between this floor plan and the actual Unit layout when built will not excuse a purchaser from completing the purchase of a Unit without abatement in price and without recourse against the Sponsor. Sponsor reserves the right to make changes in accordance with the Offering Plan.

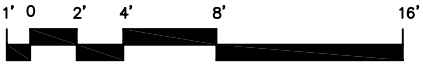

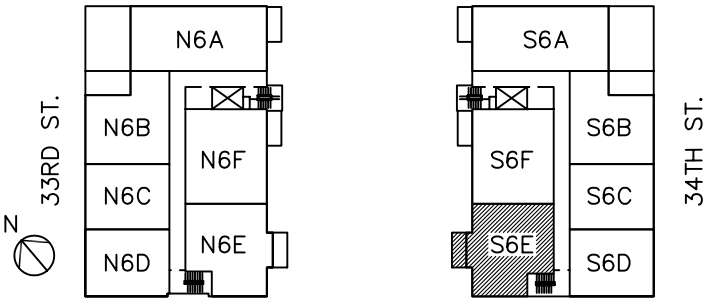

LEGEND :
DW – DISHWASHER
REF – REFRIGERATOR
TP – TALL PANTRY
W/D – WASHER / DRYER

THE 37–14 34TH STREET CONDOMINIUM
37–14 34th STREET
LONG ISLAND CITY, NY 11101

RESIDENCE S6E

FLOOR : 6
LIVINGROOM
2 BEDROOMS
1 BATHROOM
BALCONY

INTERIOR : 844.1 SF
BALCONY : 60 SF
UNIT TOTAL : 904.1 SF

The Unit Layout square footage and dimensions are approximate and subject to normal construction variances and tolerances, Square footages exceed the usable floor area. This floor plan is based on construction drawings, minor inaccuracies between this floor plan and the actual Unit layout when built will not excuse a purchaser from completing the purchase of a Unit without abatement in price and without recourse against the Sponsor. Sponsor reserves the right to make changes in accordance with the Offering Plan.

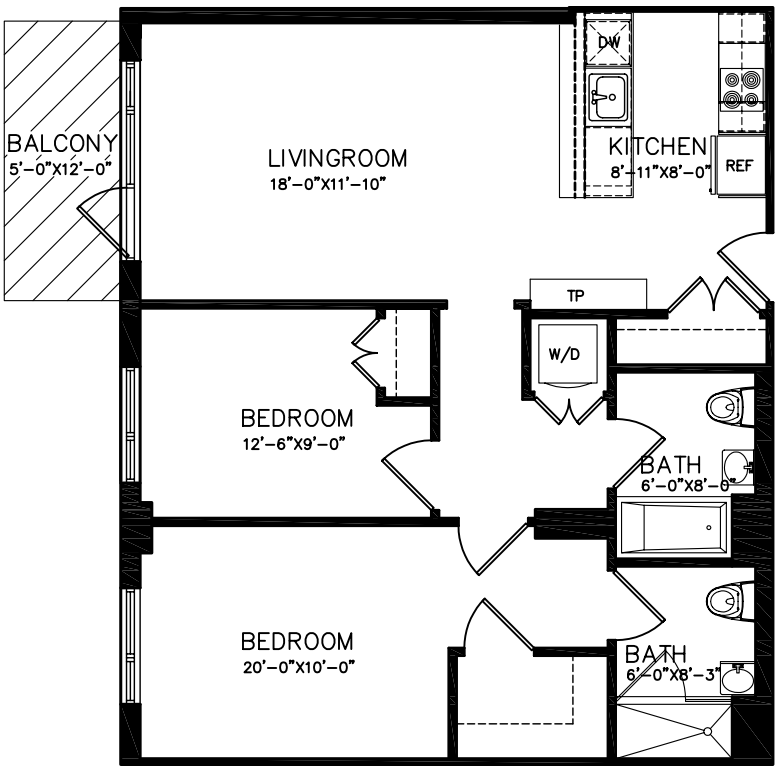

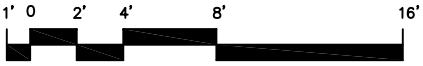

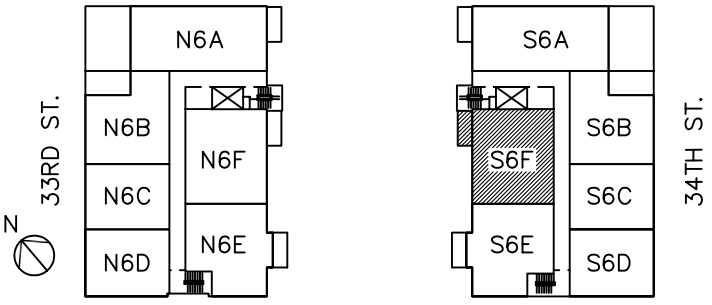

LEGEND :
DW – DISHWASHER
REF – REFRIGERATOR
TP – TALL PANTRY
W/D – WASHER / DRYER

THE 37–14 34TH STREET CONDOMINIUM
37–14 34th STREET
LONG ISLAND CITY, NY 11101

RESIDENCE S6F

FLOOR : 6
LIVINGROOM
2 BEDROOMS
2 BATHROOMS
BALCONY

INTERIOR : 909.2 SF
BALCONY : 60 SF
UNIT TOTAL : 969.2 SF

The Unit Layout square footage and dimensions are approximate and subject to normal construction variances and tolerances, Square footages exceed the usable floor area. This floor plan is based on construction drawings, minor inaccuracies between this floor plan and the actual Unit layout when built will not excuse a purchaser from completing the purchase of a Unit without abatement in price and without recourse against the Sponsor. Sponsor reserves the right to make changes in accordance with the Offering Plan.

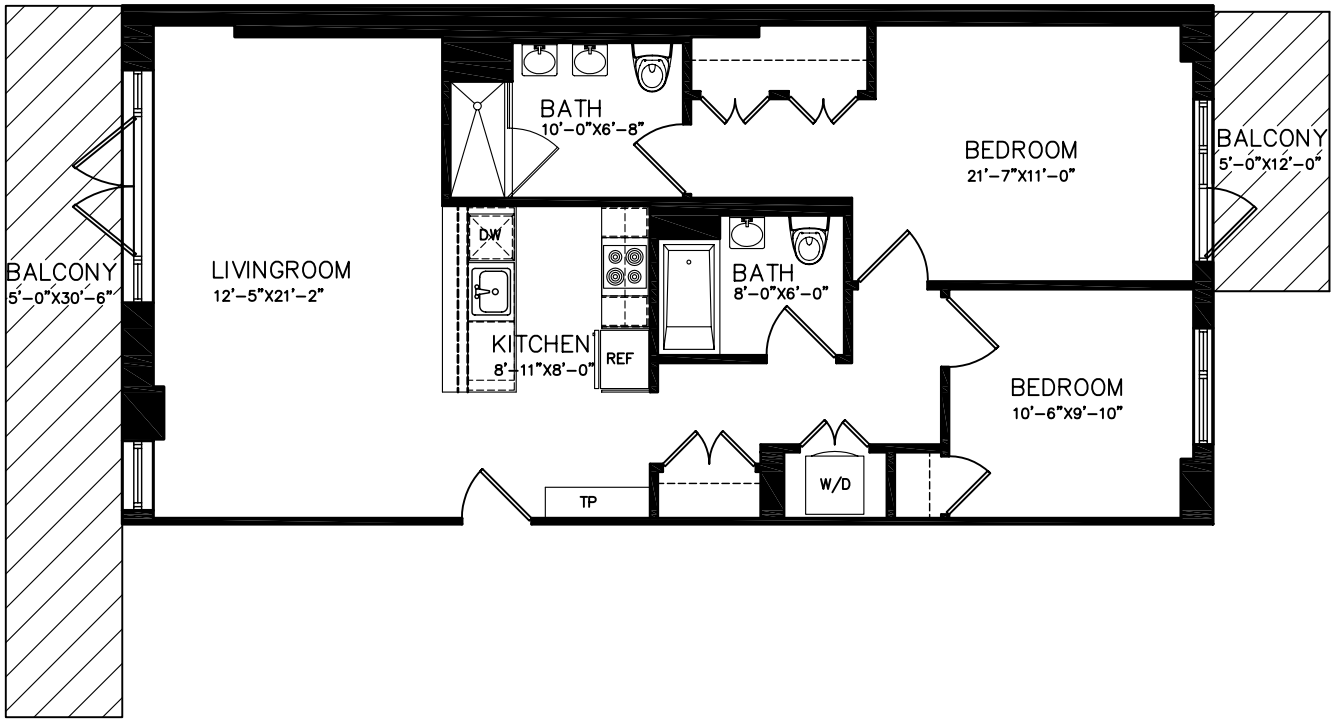

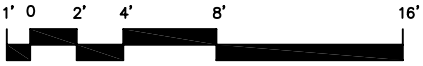

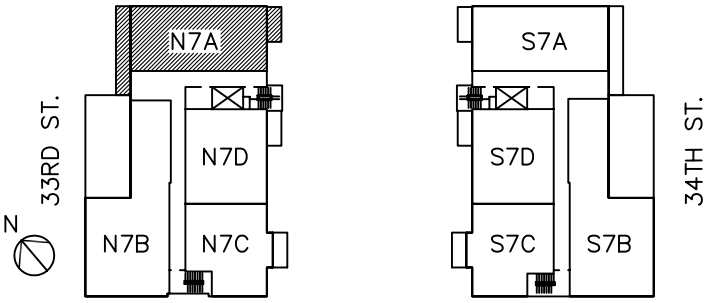

LEGEND :
DW – DISHWASHER
REF – REFRIGERATOR
TP – TALL PANTRY
W/D – WASHER / DRYER

THE 37–14 34TH STREET CONDOMINIUM
37–14 34th STREET
LONG ISLAND CITY, NY 11101

RESIDENCE N7A

FLOOR : 7
LIVINGROOM
2 BEDROOMS
2 BATHROOMS
2 BALCONIES

INTERIOR : 1,042.0 SF
BALCONY : 152.7 SF
BALCONY : 60 SF
UNIT TOTAL : 1,254.7 SF

The Unit Layout square footage and dimensions are approximate and subject to normal construction variances and tolerances, Square footages exceed the usable floor area. This floor plan is based on construction drawings, minor inaccuracies between this floor plan and the actual Unit layout when built will not excuse a purchaser from completing the purchase of a Unit without abatement in price and without recourse against the Sponsor. Sponsor reserves the right to make changes in accordance with the Offering Plan.

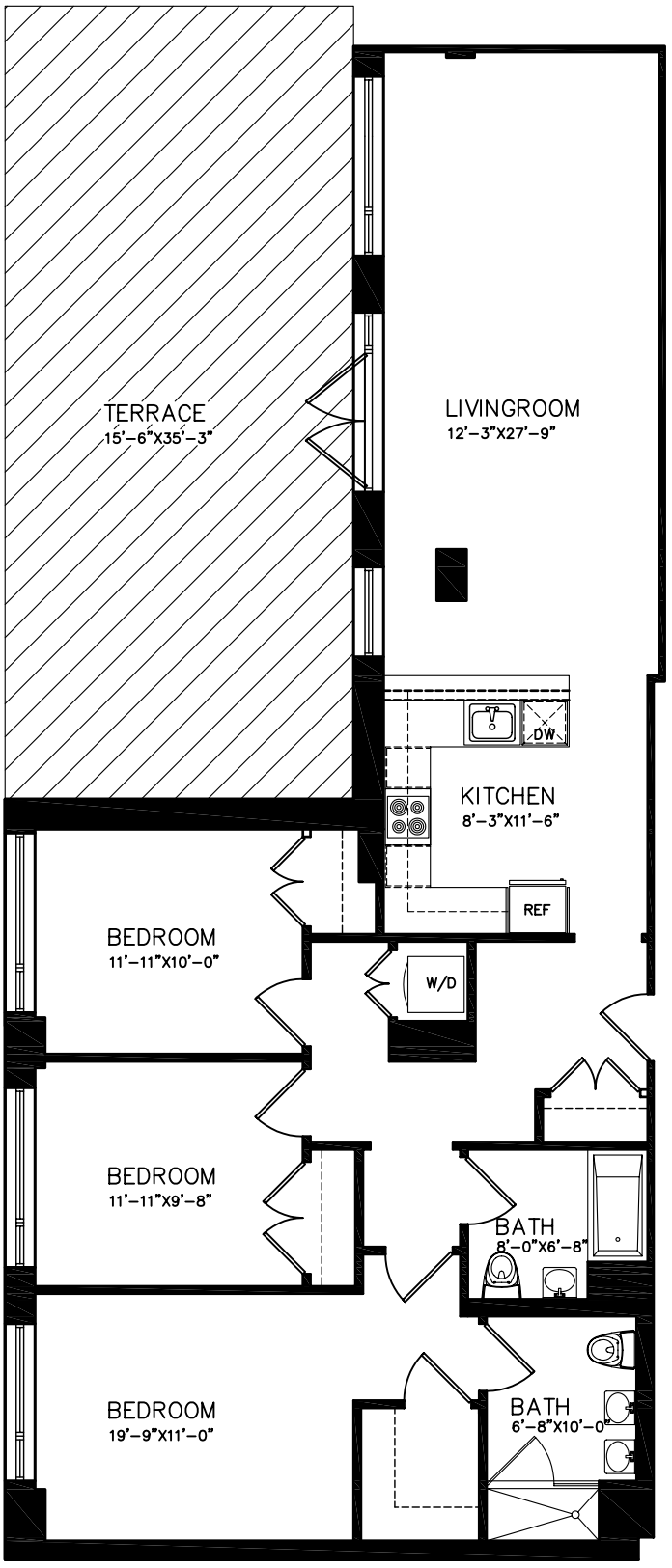

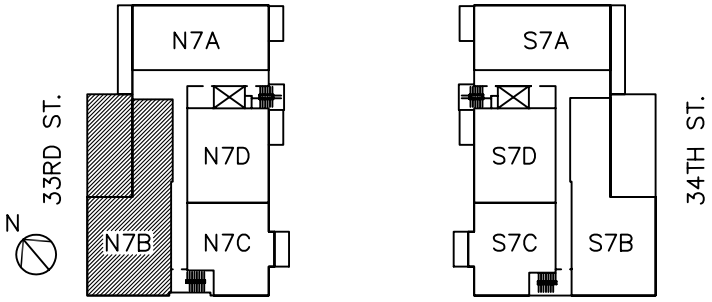

LEGEND :
DW – DISHWASHER
REF – REFRIGERATOR
TP – TALL PANTRY
W/D – WASHER / DRYER

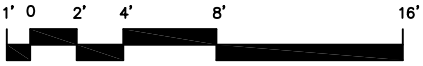

THE 37–14 34TH STREET CONDOMINIUM
37–14 34th STREET
LONG ISLAND CITY, NY 11101

RESIDENCE N7B

FLOOR : 7
LIVINGROOM
3 BEDROOMS
2 BATHROOMS
TERRACE

INTERIOR : 1,435.6 SF
TERRACE : 547.0 SF
UNIT TOTAL : 1,982.6 SF

The Unit Layout square footage and dimensions are approximate and subject to normal construction variances and tolerances, Square footages exceed the usable floor area. This floor plan is based on construction drawings, minor inaccuracies between this floor plan and the actual Unit layout when built will not excuse a purchaser from completing the purchase of a Unit without abatement in price and without recourse against the Sponsor. Sponsor reserves the right to make changes in accordance with the Offering Plan.

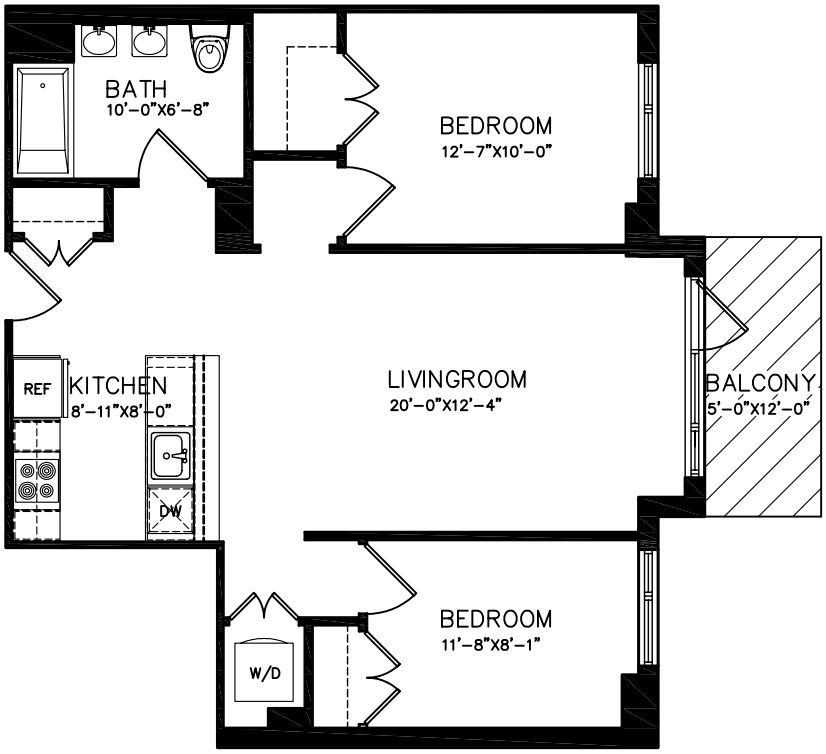

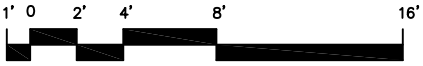

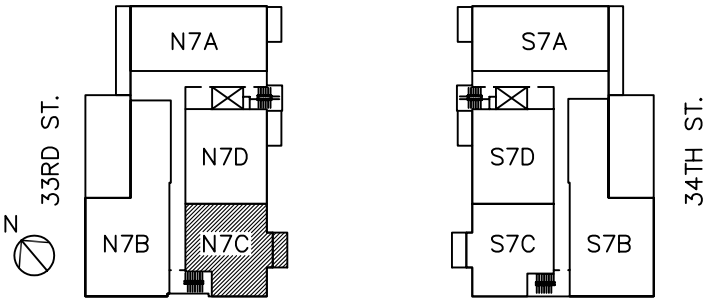

LEGEND :
DW – DISHWASHER
REF – REFRIGERATOR
TP – TALL PANTRY
W/D – WASHER / DRYER

THE 37–14 34TH STREET CONDOMINIUM
37–14 34th STREET
LONG ISLAND CITY, NY 11101

RESIDENCE N7C

FLOOR : 7
LIVINGROOM
2 BEDROOMS
1 BATHROOM
BALCONY

INTERIOR : 837.3 SF
BALCONY : 60 SF
UNIT TOTAL : 897.3 SF

The Unit Layout square footage and dimensions are approximate and subject to normal construction variances and tolerances, Square footages exceed the usable floor area. This floor plan is based on construction drawings, minor inaccuracies between this floor plan and the actual Unit layout when built will not excuse a purchaser from completing the purchase of a Unit without abatement in price and without recourse against the Sponsor. Sponsor reserves the right to make changes in accordance with the Offering Plan.

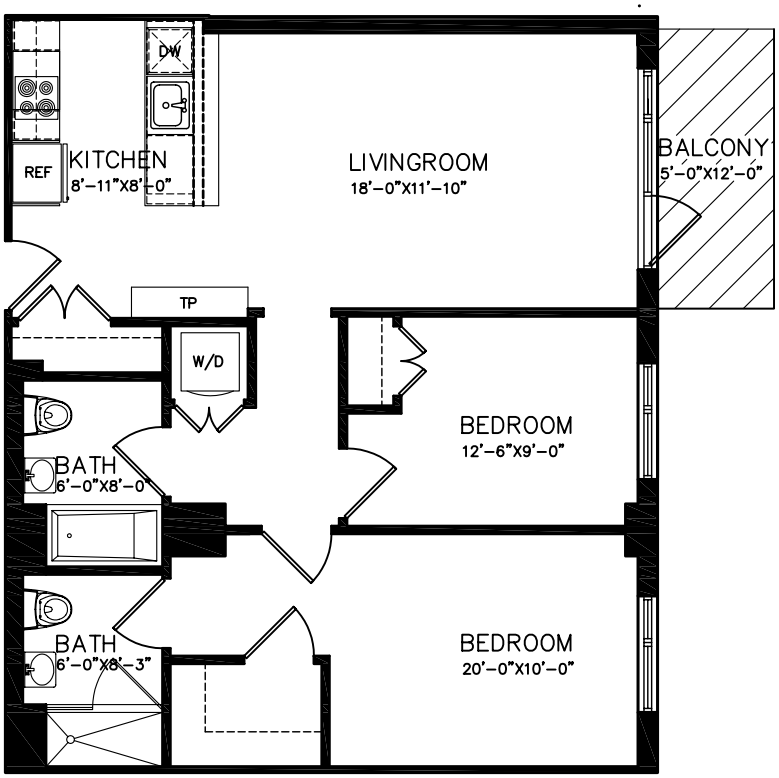

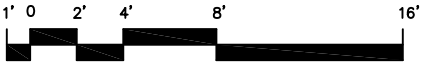

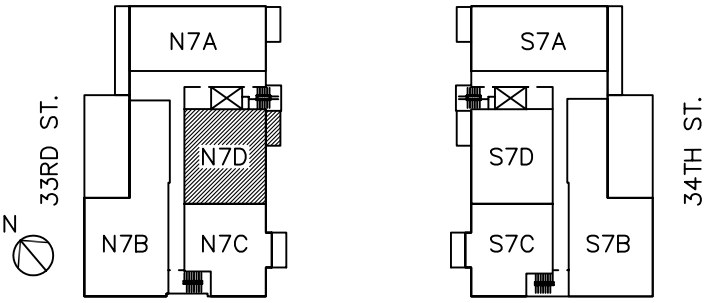

LEGEND :
DW – DISHWASHER
REF – REFRIGERATOR
TP – TALL PANTRY
W/D – WASHER / DRYER

THE 37–14 34TH STREET CONDOMINIUM
37–14 34th STREET
LONG ISLAND CITY, NY 11101

RESIDENCE N7D

FLOOR : 7
LIVINGROOM
2 BEDROOMS
2 BATHROOMS
BALCONY

INTERIOR : 909.2 SF
BALCONY : 60 SF
UNIT TOTAL : 969.2 SF

The Unit Layout square footage and dimensions are approximate and subject to normal construction variances and tolerances, Square footages exceed the usable floor area. This floor plan is based on construction drawings, minor inaccuracies between this floor plan and the actual Unit layout when built will not excuse a purchaser from completing the purchase of a Unit without abatement in price and without recourse against the Sponsor. Sponsor reserves the right to make changes in accordance with the Offering Plan.

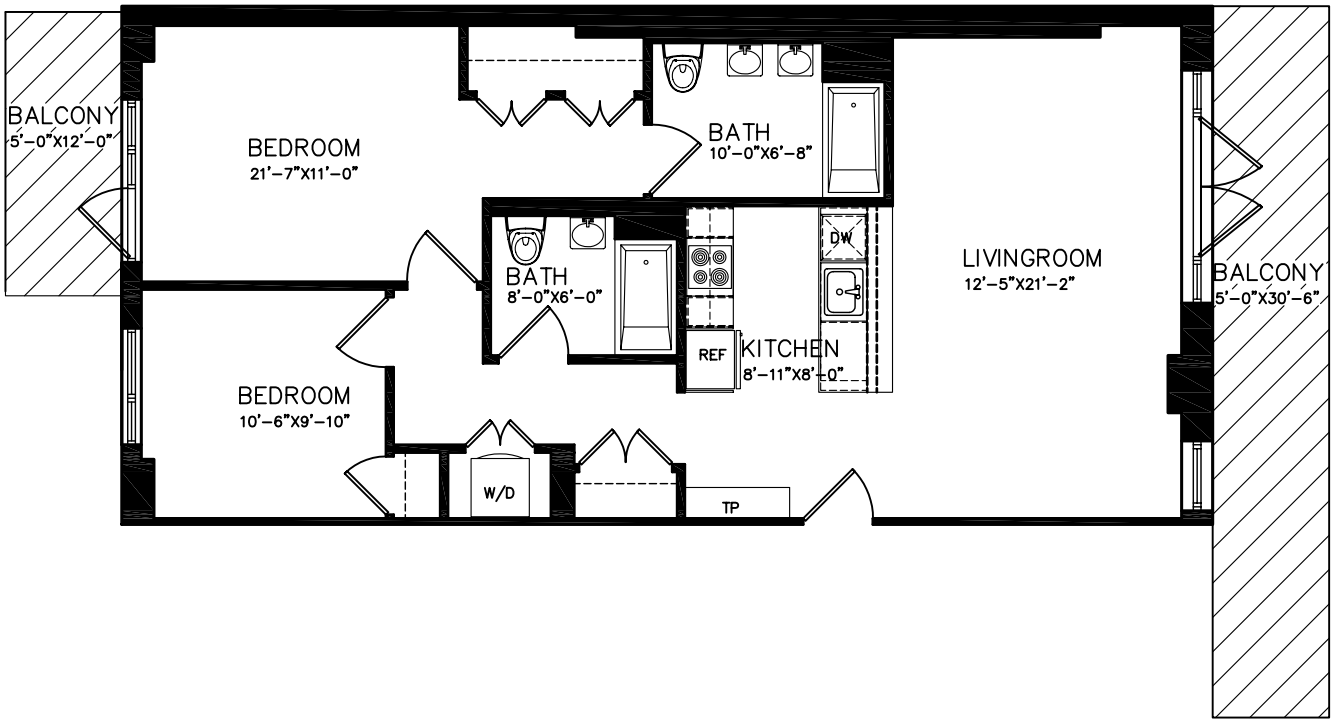

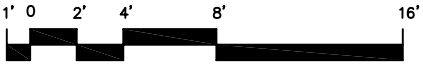

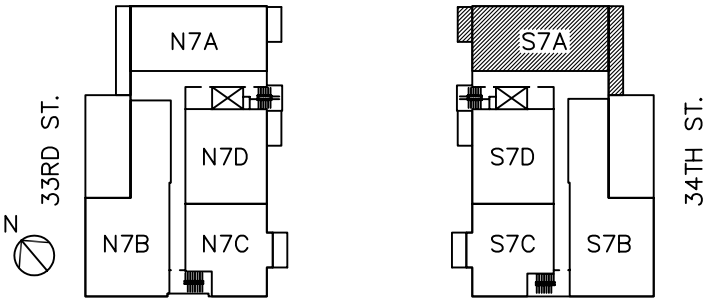

LEGEND :
DW – DISHWASHER
REF – REFRIGERATOR
TP – TALL PANTRY
W/D – WASHER / DRYER

THE 37–14 34TH STREET CONDOMINIUM
37–14 34th STREET
LONG ISLAND CITY, NY 11101

RESIDENCE S7A

FLOOR : 7
LIVINGROOM
2 BEDROOMS
2 BATHROOMS
2 BALCONIES

INTERIOR : 1,042.0 SF
BALCONY : 152.7 SF
BALCONY : 60 SF
UNIT TOTAL : 1,254.7 SF

The Unit Layout square footage and dimensions are approximate and subject to normal construction variances and tolerances, Square footages exceed the usable floor area. This floor plan is based on construction drawings, minor inaccuracies between this floor plan and the actual Unit layout when built will not excuse a purchaser from completing the purchase of a Unit without abatement in price and without recourse against the Sponsor. Sponsor reserves the right to make changes in accordance with the Offering Plan.

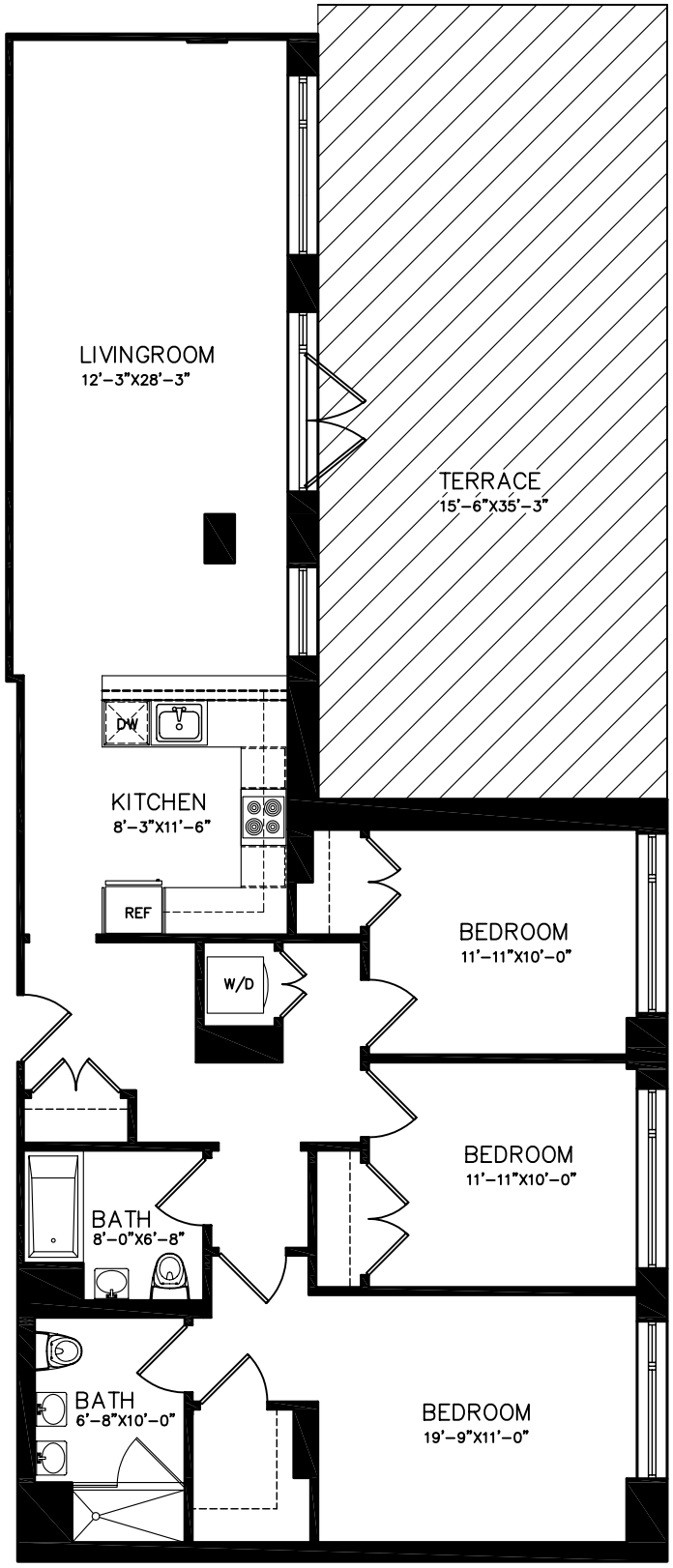

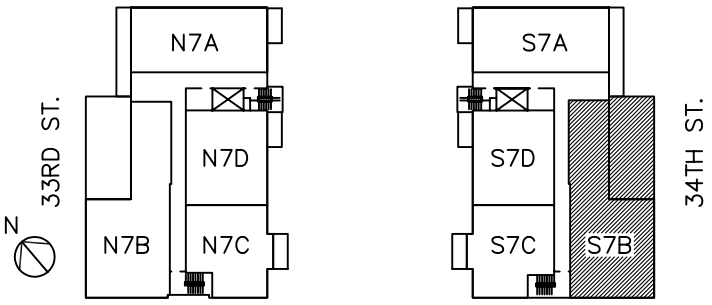

LEGEND :
DW – DISHWASHER
REF – REFRIGERATOR
TP – TALL PANTRY
W/D – WASHER / DRYER

THE 37–14 34TH STREET CONDOMINIUM
37–14 34th STREET
LONG ISLAND CITY, NY 11101

RESIDENCE S7B

FLOOR : 7
LIVINGROOM
3 BEDROOMS
2 BATHROOMS
TERRACE

INTERIOR : 1,443.2 SF
TERRACE : 547.0 SF
UNIT TOTAL : 1,990.2 SF

The Unit Layout square footage and dimensions are approximate and subject to normal construction variances and tolerances, Square footages exceed the usable floor area. This floor plan is based on construction drawings, minor inaccuracies between this floor plan and the actual Unit layout when built will not excuse a purchaser from completing the purchase of a Unit without abatement in price and without recourse against the Sponsor. Sponsor reserves the right to make changes in accordance with the Offering Plan.

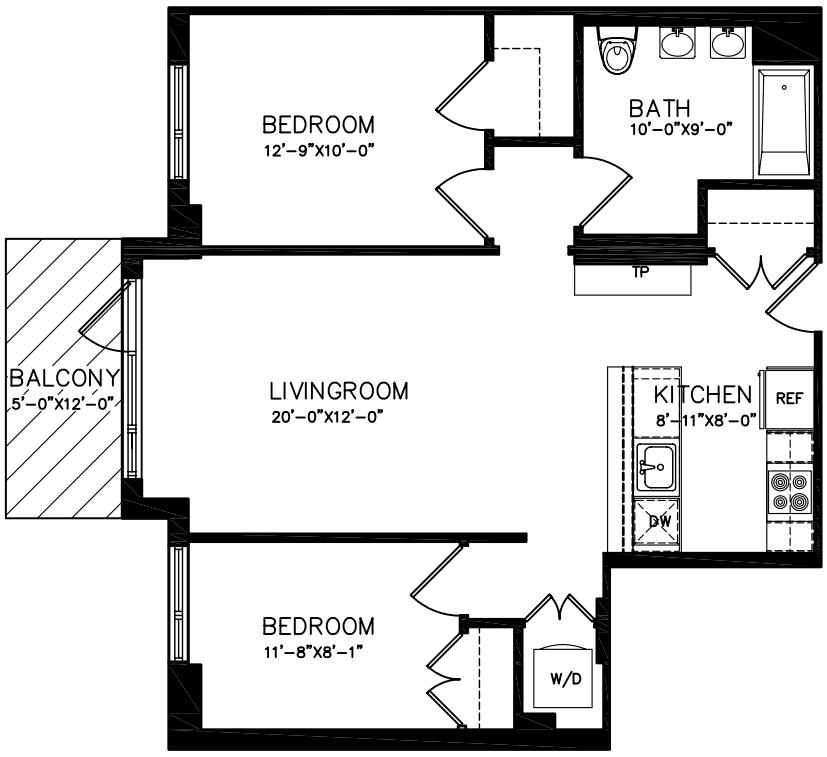

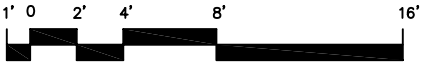

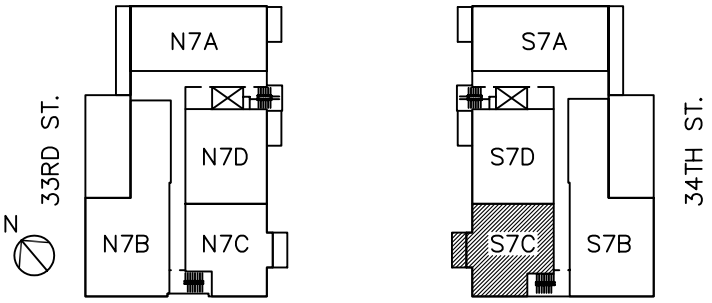

LEGEND :
DW – DISHWASHER
REF – REFRIGERATOR
TP – TALL PANTRY
W/D – WASHER / DRYER

THE 37–14 34TH STREET CONDOMINIUM
37–14 34th STREET
LONG ISLAND CITY, NY 11101

RESIDENCE S7C

FLOOR : 7
LIVINGROOM
2 BEDROOMS
1 BATHROOM
BALCONY

INTERIOR : 844.1 SF
BALCONY : 60 SF
UNIT TOTAL : 904.1 SF

The Unit Layout square footage and dimensions are approximate and subject to normal construction variances and tolerances, Square footages exceed the usable floor area. This floor plan is based on construction drawings, minor inaccuracies between this floor plan and the actual Unit layout when built will not excuse a purchaser from completing the purchase of a Unit without abatement in price and without recourse against the Sponsor. Sponsor reserves the right to make changes in accordance with the Offering Plan.

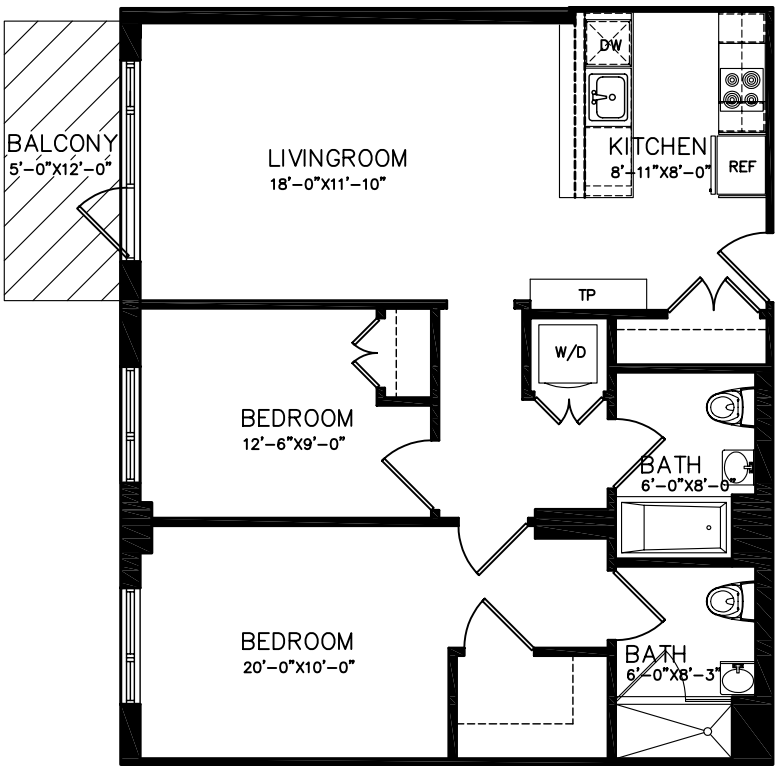

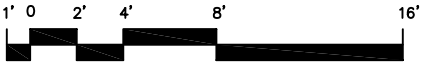

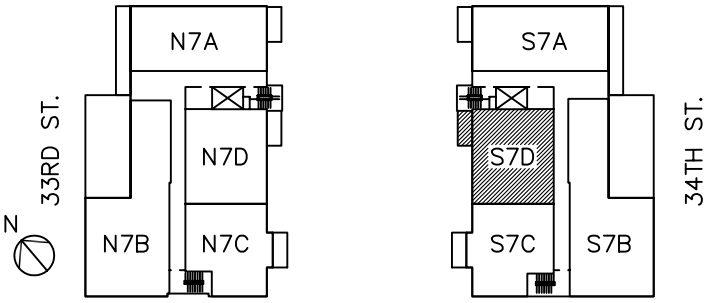

LEGEND :
DW – DISHWASHER
REF – REFRIGERATOR
TP – TALL PANTRY
W/D – WASHER / DRYER

THE 37–14 34TH STREET CONDOMINIUM
37–14 34th STREET
LONG ISLAND CITY, NY 11101

RESIDENCE S7D

FLOOR : 7
LIVINGROOM
2 BEDROOMS
2 BATHROOMS
BALCONY

INTERIOR : 909.2 SF
BALCONY : 60 SF
UNIT TOTAL : 969.2 SF

The Unit Layout square footage and dimensions are approximate and subject to normal construction variances and tolerances, Square footages exceed the usable floor area. This floor plan is based on construction drawings, minor inaccuracies between this floor plan and the actual Unit layout when built will not excuse a purchaser from completing the purchase of a Unit without abatement in price and without recourse against the Sponsor. Sponsor reserves the right to make changes in accordance with the Offering Plan.

DECLARATION ESTABLISHING A PLAN OF CONDOMINIUM OWNERSHIP OF PREMISES LOCATED AT 37-14 34TH STREET, IN THE BOROUGH OF QUEENS, COUNTY OF QUEENS, CITY AND STATE OF NEW YORK, PURSUANT TO ARTICLE 9-B OF THE REAL PROPERTY LAW OF THE STATE OF NEW YORK.

NAME: THE 37-14 34TH STREET CONDOMINIUM

DECLARANT:

3714 LIC DEVELOPMENT LLC
4918 3rd Avenue
Brooklyn, NY 11220

DATE OF DECLARATION: _____, 20___

The Land affected by the within instrument lies in Block 375, F/K/A 24, N/K/A Lots _____ on the Tax Map of the Borough of Queens, County of Queens, State of New York.

MARANS WEISZ & NEWMAN, LLC
Attorney(s) for Sponsor
29 Broadway Suite 2400
New York, New York 10006

DECLARATION OF THE 37-14 34TH STREET CONDOMINIUM
PURSUANT TO ARTICLE 9-B OF THE
REAL PROPERTY LAW OF THE STATE OF NEW YORK

In the Borough of Queens, County of Queens, and City and State of New York on this _____ day of _____ 20___, 3714 LIC DEVELOPMENT LLC (the “Owner” or the “Declarant”), a limited liability company existing under the laws of the State of New York, whose office is situated at 4918 3rd Avenue, Brooklyn, NY 11220 does hereby declare as follows:

ARTICLE 1 SUBMISSION OF PROPERTY

1.1. Submission of Property. Declarant hereby submits the Land and the Building (each as hereinafter defined), and all other improvements erected and to be erected thereon, all easements, rights and appurtenances belonging thereto and all other property, real, personal or mixed, intended for use in connection therewith (collectively, the "Property"), to the provisions of Article 9-B of the Real Property Law of the State of New York (as the same may be amended from time to time, the "Condominium Act") and pursuant thereto does hereby establish a condominium to be known (subject to the provisions of this Declaration) as the “The 37-14 34th Street Condominium” (the “Condominium”).

1.2. The Land. Included in the Property described above is all Declarant's fee interest in that certain tract, plot, piece and parcel of land (the "Land") situate, lying and being in the County of Queens, City and State of New York, and more particularly described in Schedule A annexed hereto and made a part hereof.

1.3. Condominium By-Laws. Annexed to this Declaration as Schedule C and made a part hereof are the by-laws of the entire Condominium which shall govern the general operation, use and occupancy of the entire Condominium (said by-laws, as the same may be amended from time to time in accordance with the provisions hereof and thereof, the "By-Laws").

1.4. Property Subject to Certain Development Rights. The Property is not subject to development rights or restrictions.

1.5. Development Rights. Any portion of the unused floor area development rights that are now owned, subsequently acquired, or that may become available under the Zoning Resolution of the City of New York (the "Development Rights") shall be owned by the Declarant, but may be utilized by Declarant or any party acquiring the same from the Declarant and merged into a zoning lot pursuant to the terms of a zoning lot development agreement or similar agreement or instrument (a "ZLDA"). If a ZLDA is a condition precedent to increasing Development Rights, Declarant (including Declarant’s successors, assignees, or designees) may enter into a ZLDA without the consent of the Board of Managers or Unit Owners to increase Development Rights.

Declarant or any entity to whom Declarant conveys Development Rights shall have the right to amend the Declaration and any ZLDA that exists pertaining to the Building, in order to convey Development Rights. Declarant or any entity to whom Declarant conveys the Development Rights shall have the right to complete, file, and record all documents without the consent of the Unit

Owners or the Board of Managers or any parties in interest to the Common Elements. The Unit Owners, the Board of Managers and/or any parties in interest to the Common Elements shall be deemed to have consented to the transfer of Development Rights and shall execute any documents evidencing said consent as are reasonably requested by Declarant or any entity to whom Declarant conveys the Development Rights.

1.6. Defined Terms: Conflicting Provisions. All capitalized terms used but which are not separately defined in this Declaration shall have the meanings given to such terms in the By-Laws. In the event of a conflict between: (i) the terms and provisions of this Declaration and the terms and provisions of the By-Laws, the terms and provisions of this Declaration shall in all events govern.

ARTICLE 2 DEFINITIONS

Affiliate: with respect to any person or entity, means a person or entity which directly or indirectly (through one or more intermediaries) controls, is controlled by, or is under common control with, such person or entity. For purposes hereof, the term "control" (including the related terms "controlled by" and "under common control with") mean the possession, directly or indirectly, of the power to direct or cause the direction of the management and policies of a person or entity (whether through the ownership of voting securities or other ownership interest, by contract or otherwise); and the ownership, either directly or indirectly, of at least fifty-one percent (51%) of the legal or beneficial interest in such entity.

Board of Managers: The governing body of the Condominium initially comprised of one (1) managers appointed by Declarant.

Budget Allocations: The allocation of Common Expenses among the Unit Owners set forth in Schedule D to the Declaration.

Building: The structure containing the Units and the Common Elements of the Condominium (other than the land under the Building).

By-Laws (including all amendments thereto): One of the documents governing the operation of the Condominium, the form of which is annexed hereto as Exhibit C.

Cabana Unit: Any space designated as a Cabana Unit in the Floor Plans. For budgeting and voting purposes, a Cabana Unit shall be treated as a Residential Unit.

Cabana Unit Owner: An owner of a Cabana Unit.

City Register’s Office: Office of the City Register of The City of New York.

Commercial Unit: The Unit designated as the Commercial Unit in the Floor Plans.

Common Charges: Assessments payable to the Board of Managers by each Unit Owner for the purpose of meeting Common Expenses.

Common Expenses: The costs and expenses in connection with the repair, maintenance, replacement, restoration and operation of, and any alteration, addition or improvement to, the Common Elements, including any reserve established in anticipation of the aforesaid costs and expenses.

Common Elements: The Land, all parts of the Building other than the Units, including the foundation, roof and supports of the Building, and all areas or facilities for the common use of the Units and the Unit Owners.

Common Interest: The proportionate, undivided interest in fee simple absolute in the Common Elements pertaining to each Unit set forth in the Declaration. Such interest is expressed as a numerical percentage. The total of all Common Interest percentages pertaining to all Units equals 100%. The Common Interest of the Unit is the basis for determining, among other things, a Unit Owner's (a) proportionate share of the Common Expenses and (b) proportionate share of any distributions upon termination of the Condominium.

Condominium: The Units and Common Elements comprising the Property to be called The 37-14 34th Street Condominium.

Condominium Act: Article 9-B of the New York State Real Property Law.

Declarant: 3714 LIC DEVELOPMENT LLC, their successors, assigns, and/or designees, including any Persons designated as having the rights of Declarant by Declarant or a designee of Declarant. The words "Declarant" and "Sponsor" are used interchangeably in this Declaration.

Declaration (including all amendments thereto): The recorded instrument by which the Property is submitted to the provisions of the Condominium Act, as such instrument may be amended from time to time, consistent with law and the By-Laws. The By-Laws, which govern the operation of the Condominium, are part of the Declaration.

Department of Buildings: The Department of Buildings of the City of New York.

Department of Law: The New York State Department of Law.

Insurance Trustee: A bank or trust company in the State of New York from time to time appointed to serve as such by the Board of Managers. The Sponsor Mortgagee shall serve as the initial Insurance Trustee for so long as Sponsor Mortgagee shall have a lien against one or more Unsold Units held by Declarant.

Limited Common Elements: Those Common Elements for which a Unit Owner will have the exclusive right to use. Examples of Limited Common Elements are rear yards, terraces, and balconies accessed through particular Units.

Non-Residential Common Element: Those portions of the Common Elements intended to be devoted to the common use and enjoyment of the Non-Residential Unit Owners. Upon recording of this Declaration, no Non-Residential Common Elements exist; a subdivision of the Non-Residential Unit may create Non-Residential Common Elements in the future.

Non-Residential Common Interest: The proportionate undivided interest, expressed as a numerical percentage, of each Non-Residential Unit Owner in the Common Elements. The total of all Non-Residential Common Interest percentages appurtenant to all Non-Residential Units equals to 100%.

Non-Residential Unit: The Commercial Unit and any Units created by the subdivision thereof.

Non-Residential Unit Owner: An owner of a Non-Residential Unit.

Parking Unit: Any space designated as a Parking Unit in the Floor Plans. For budgeting and voting purposes, a Parking Unit shall be treated as a Residential Unit.

Parking Unit Owner: An owner of a Parking Unit.

Permitted Mortgage (also referred to as a "Registered Mortgage" if such Permitted Mortgage qualifies as a Registered Mortgage): A mortgage of a Unit or Units permitted to be placed thereon pursuant to the provisions of the By-Laws, the Construction Loan, and/or any mezzanine finance loan or preferred equity loan provided to Sponsor and/or Declarant.

Permitted Mortgagee (also referred to as a "Registered Mortgagee" if such Permitted Mortgage qualifies as a Registered Mortgage): The holder of a Registered Mortgage and shall include, without limitation, banks, financial institutions, and/or other lenders such as the Construction Lender, its successors, assigns and/or affiliates, as well as any Sponsor Mortgagee.

Plans and Specifications (also referred to as "Plans"): The plans and specifications for the Building which (to the extent required by law) are filed with, and approved by, the Department of Buildings and which plans and specifications may, from time to time, have been amended or changed, or may hereafter be amended or changed in accordance with the provisions of this Declaration.

Property: The Land, the Building and other improvements thereon, and all easements, rights and appurtenances belonging thereto.

Registered Guarantor: A guarantor on a Permitted Mortgage who has registered with the Board of Managers by supplying the Board of Managers with the name and address of the guarantor.

Registered Mortgage: A mortgage held by a Registered Mortgagee.

Registered Mortgagee: A mortgagee that holds a mortgage on a Unit that has provided notice to the Board of Managers indicating they hold a mortgage on a Unit, which notice contains a copy of the mortgage along with the contact information for the mortgagee.

Residential Common Elements: Those portions of the Common Elements intended to be devoted to the common use and enjoyment of the Residential Unit Owners.

Residential Common Expenses: All costs and expenses to be incurred generally by Residential Unit Owners pursuant to the Declaration and/or the By-Laws in connection with: (i) the repair, maintenance, replacement, restoration and operation of, and any alteration, addition or

improvement to, the Residential Common Elements; or (ii) the establishment and/or maintenance of an operating reserve fund for working capital and replacements to the Residential Common Elements.

Residential Common Interest: The proportionate undivided interest, expressed as a numerical percentage, of each Residential Unit Owner in the Residential Common Elements. The total of all Residential Common Interest percentages appurtenant to all Residential Units equals to 100%.

Residential Unit: Any areas of the Building designated as such on the Floor Plans, and intended to be used for residential purposes, together with its percentage of Common Interest.

Residential Unit Owner: The owner of a Residential Unit.

Rules and Regulations: The rules and regulations of the Condominium made in accordance with the By-Laws. The rules and regulations, which will apply unless and until amended by the Board of Managers, are set forth as an addendum to the By-Laws.

Sponsor: The person, partnership, joint venture, corporation, company, trust, association or other entity which is offering the Units in this Condominium to the public at the given time in question.

Successor Sponsor: An affiliate of Sponsor, a designee or assignee of Sponsor, or a Purchaser of 10 units or 20 percent of the total number of Units in the Condominium, whichever is less, which are not purchased for occupancy by the owner or one or more members of their immediate family. A Successor Sponsor has the same rights and obligations of a Sponsor, but only in relationship to the Units which such Successor Sponsor owns. Successor Sponsors have the same right to assign or designate a person or entity, whether related or unrelated to Sponsor, to succeed to their rights and obligations and any such assignee or designee shall also be deemed a Successor Sponsor.

Sponsor's Mortgagee (or "Sponsor's Registered Mortgagee"): Any Registered Mortgagee holding a Registered Mortgage encumbering Units owned by Sponsor and/or any other lender that has provided mezzanine financing or preferred equity financing to the Sponsor and/or Declarant. For the avoidance of doubt, the Construction Lender shall be deemed to be a Sponsor's Registered Mortgagee.

Storage Unit: Any space designated as a Storage Unit in the Floor Plans. For budgeting and voting purposes, a Storage Unit shall be treated as a Residential Unit.

Storage Unit Owner: An owner of a Storage Unit.

Tax Lot Drawings (also referred to as "Floor Plans"): Tax lot drawings filed simultaneously with the recording of this Declaration in the New York City Register's Office, which drawings set forth a description of the Building, and stating the number of stories, the number of Units and their layout, and the Common Elements, and any amendments thereto.

Unit: a part of the Property intended for any type of use or uses, and with an exit to a public street or highway or to Common Elements leading to a public street or highway, and may include such appurtenances as balcony, terrace, and patio. Each Unit is designated by number, letter or

combination thereof or other official designations conforming to the tax lot number designating the Unit in the Declaration and on the Floor Plans.

Unit Owner: An owner of any Unit. Two or more of such owners are collectively referred to as "Unit Owners."

Unsold Units: Any Units owned by Sponsor or Successor Sponsor, other than any Unit purchased by and for the use of Sponsor, Affiliate of Sponsor, or its designee, until such time as the same have been sold.

ARTICLE 3 DESCRIPTION OF PROPERTY AND IMPROVEMENTS

The Declarant has constructed a building on the parcel of land described above, to be converted to a condominium known as The 37-14 34th Street Condominium according to Tax Lot Drawings filed simultaneously with the recording of this Declaration.

The Condominium will consist of one building containing a total of Seventy-Seven (77) Residential Units, One (1) Commercial Unit, Forty-Three (43) Parking Units, Forty-Two (42) Storage Units, and Six (6) Cabana Units, General Common Elements, Residential Common Elements, Non-Residential Common Elements, and the Limited Common Elements, all as set forth in the Tax Lot Drawings. The Building is built with concrete, brick, stone, wood, steel, and glass. Each Unit Owner will have fee ownership in, and exclusive right of occupancy and possession of each Unit, together with an undivided interest in the General Common Elements of the Condominium as set forth and defined in this Declaration, all in accordance with Article 9-B of the Real Property Law of the State of New York. The designations of what constitutes the Residential Units, Non-Residential Unit, General Common Elements, Residential Common Elements, Non-Residential Common Elements, and the Limited Common Elements may be changed by mutual consent of the Declarant and Unit Owners, and shall be reflected in an amendment to the Declaration.

The Condominium has a total land area of approximately 19,500 square feet, and the Building will contain approximately 109,564 gross square feet of floor area.

ARTICLE 4 DIMENSIONS OF UNITS

Each Unit is measured horizontally from the exterior side of exterior walls (columns, mechanical pipes, shafts, shaft ways, chases, chase ways and conduits are not deducted) to the centerline of the partitions separating one Unit from another Unit, or the exterior of the interior walls and partitions separating a Unit from public corridors, stairs, elevators, other mechanical equipment spaces or any Common Elements or Limited Common Elements not within a Unit. Each Unit is measured vertically from the top of the floor slab below to the underside of the finished ceiling. Notwithstanding the foregoing, any Common Elements located within this described form of measurement shall not be considered part of such Unit.

ARTICLE 5 COMMON ELEMENTS

5.1. Common Elements. The Common Elements include those portions of the Building that are

designated as “General Common Elements” or “Common Elements” on the Tax Lot Drawings, and to the extent not specifically identified as such, all other parts of the Property (other than those areas and items specifically identified as part of a Unit, a Residential Common Element or a Limited Common Element) the common use of which is necessary or convenient for the existence, maintenance, operation or safety of the Property. Without intending to limit the generality of the foregoing in any respect, the Common Elements include:

(a) the Land, together with all easements, rights and privileges appurtenant thereto (except as otherwise expressly provided in this Declaration);

(b) all sidewalks, fences, and landscaped areas benefiting any Common Element, or not otherwise designated as a Residential Common Element or Limited Common Element, or a part of a Unit;

(c) all structural elements, foundations, foundation walls, footings, columns, girders, beams, supports, interior load-bearing walls, floor slabs (but not flooring material), and ceilings and floors separating the Units from one another, and from exterior walls and facades (but not including windows);

(d) any ventilation system consisting of pumps, motors, ductwork, fans and controls, steam and condensate return piping, serving or benefiting all of the Units;

(e) all electrical risers, feeders, lines and equipment, including incoming service, main switchgear and distribution panelboards, conduits, wires, meters, and transformers serving or benefiting any Common Element, or all of the Units;

(f) all storm and sanitary sewer equipment and pipes (including vent lines, ejectors, interceptors, filters and valves) downspouts, and roof drainage systems, excluding, however, all such items located within a Unit and serving only that Unit;

(g) all electric service rooms, gas, steam and water meter rooms, telephone rooms, and other service, mechanical and utility rooms serving or benefiting any Common Element, or all of the Units;

(h) all other facilities of the Building (including shafts, pipes, wires, ducts, vents, flues, cables, conduits and lines) which serve or benefit or are necessary or convenient for the existence, maintenance, operation or safety of the Common Elements, or all of the Units;

(i) enclosing walls and doors surrounding mechanical equipment;

(j) all utilities and mechanical and electrical transfers and equipment, and vaults for such utilities used for the Common Elements, or all of the Units;

(k) portions of the Building housing equipment servicing all the Units and not allocated as a Residential or Limited Common Element;

(l) portions of the roof housing equipment servicing all the Units (but not including

the equipment), or shown on the Tax Lot Drawings as Common Elements, or not allocated to the Residential Common Elements; and

(m) whether or not specifically identified as part of the Common Elements (or identified at all) on the Tax Lot Drawings, all other parts of the Property either existing for the common use of all of the Units, or that are necessary or convenient for the existence, maintenance, operation or safety of the Property.

5.2. Residential Common Elements. The Residential Common Elements consist of those portions of the property designated on the Tax Lot Drawings as Residential Common Elements, and also those Common Elements (other than vertical shaftways and penetrations) which exclusively serve or benefit only the Residential Units or the Residential Unit Owners whether or not designated as Residential Common Elements (or designated at all) on the Tax Lot Drawings (but excluding any items therein or in the Building which are not part of the Property, including, without limitation, any equipment, wiring and devices owned by telecom providers, and those areas and items specifically identified as part of a Unit or a Limited Common Element). The Residential Common Elements include, without limitation, the following:

(a) entrances, exits, and lobby which exclusively serve or benefit the Residential Units;

(b) all stairs, stairways and fire stairways, halls, passages, corridors, storage rooms, housekeeping areas, mechanical and other rooms, areas and spaces (including their respective floors, ceilings and enclosing walls) which exclusively serve or benefit the Residential Units and are not part of any other Common Element or Unit;

(c) all security monitors and equipment and other security facilities, virtual doorman, or other low voltage system which serve or benefit only the Residential Units;

(d) all passenger elevators and elevator shafts and equipment which exclusively serve or benefit the Residential Units and are not part of any other Common Element or Unit;

(e) any landscaped areas of the Property, and any fences surrounding such area, which serve or benefit only the Residential Units or the Residential Unit Owners;

(f) all areas where plumbing, pipes, vents, flues and/or risers and equipment exclusively serving the Residential Units is located, but not including areas located within a Unit and all HVAC systems, pipes, flues, risers, vents and ducts, which are part of the Units they serve;

(g) any portions of the Building designated on the Tax Lot Drawings as Residential Common Elements; and

(h) whether or not specifically identified as part of the Residential Common Elements (or at all) on the Tax Lot Drawings, all other parts of the Property and all telecommunications equipment and all other systems, installations and facilities (including shafts, pipes, wires, ducts, vents, flues, cables, conduits and lines) and equipment on the Property (other than those areas and/or items specifically identified on the Tax Lot

Drawings or herein as part of a Unit and/or to the General Common Elements) which serve or benefit or are necessary or convenient or existing for the common use, existence, maintenance, operation or safety of the Residential Units or the Residential Unit Owners.

5.3. Limited Common Elements. Limited Common Elements are Common Elements existing for the sole use and enjoyment of certain Unit Owners to the exclusion of all other Unit Owners. Limited Common Elements include but are not limited to any facilities (pipes, shut-off valves, wires, lines, conduits) that exclusively serve a Unit that are located behind its boundary walls or within its boundary walls but not readily accessible without damage to such boundary walls, balconies, terraces, windows, or yards that are allocated for the exclusive use of an appurtenant Unit, as set forth in the Floor Plans.

5.4 No Division of Common Elements. The Common Elements shall remain undivided and no Unit Owner shall bring any action for partition or division unless otherwise provided by law or elsewhere in the Declaration of By-Laws. Each Unit Owner shall have the right to use the Common Elements, other than such portion, if any, which are by the terms of this Declaration or the annexed By-Laws irrevocably restricted in use to other Unit Owners, in accordance with the purpose for which such elements are intended, without hindering the exercise of or encroaching upon the rights or other Unit Owners. The undivided interest in the Common Elements shall not be separated from the Unit to which it appertains and shall be deemed conveyed or encumbered with that Unit even though such interest is not expressly mentioned or described in the conveyance or other instrument.

ARTICLE 6 USE OF UNITS AND COMMON ELEMENTS

6.1. Use of Residential Units. The Residential Units may only be used for residential purposes, home occupations to the extent permitted by law, and/or as a sales office by Declarant.

6.2. Use of Non-Residential Units. Subject to compliance with all laws, including, without limitation, the certificate of occupancy for such Unit and any applicable zoning regulations, and except as otherwise provided herein and in the By-Laws, a Non-Residential may be used for any purpose consistent with the Certificate of Occupancy, or for any lawful purpose.

6.2.1 No income derived from any use of a Non-Residential Unit will constitute income to the Board or any Unit Owner except the Non-Residential Unit Owner. The Non-Residential Unit Owner may lease or license all or any portion of its Unit to one or more lessees (or may permit occupants or permittees to use all or any portion of its Unit) so long as the uses thereof are legally permitted, and comply with this Declaration and the By-Laws.

6.2.2 A Non-Residential Unit Owner shall have the right to install and maintain signage, storefronts, and security devices upon the exterior of the Building appurtenant to the Non-Residential Unit, and to determine the content and nature of the signage, provided such signage relates solely to an occupant of the Unit or the sale or leasing of such Unit, and is consistent with the design and aesthetic of the Building façade without the consent of the Board of Managers. Any signage requires the written consent of Declarant for so long as Declarant owns a Unit. No “sandwich” style advertising board composed of two boards set up in a triangle shape or sound

equipment to promote or advertise functions or events in the Non-Residential Unit will be permitted at the street entrance to the Non-Residential Unit or an adjacent sidewalk. No functions or events held by the Non-Residential Unit Owner will be permitted at the street entrance to the Non-Residential Unit or an adjacent sidewalk.

6.2.3 Except to the extent inconsistent with the By-Laws or prohibited by Law, and unless there shall be a material adverse effect on the Residential Unit Owners, a Non-Residential Unit Owner shall have the right, without the vote or consent of the Board of Managers to: (1) make alterations, additions or improvements, whether structural or non-structural, interior or exterior, ordinary or extraordinary, in, to and upon their Non-Residential Unit; (2) change the layout or number of rooms in the Non-Residential Unit from time to time; (3) change the Non-Residential Unit, by subdividing the same, into any desired number of Units, combining any Units resulting from a subdivision, altering the boundary walls between the Non-Residential Unit, or otherwise; (4) designate all or part of a Non-Residential Unit as a newly created Non-Residential Common Element; (5) reapportion among the newly created Non-Residential Units resulting from any subdivision, combination or otherwise their percentage interests in the Common Elements which shall be based upon floor space, subject to the location of such space and the additional factors of relative value to other space in the Condominium, the uniqueness of the Unit, the availability of Common Elements for exclusive or shared use, and the overall dimensions of the particular Unit; provided that in no case may such reapportionment result in a greater percentage of Common Interest for the total of the new Non-Residential Unit(s) than existed for the original Non-Residential Unit; and (6) amend the Certificate of Occupancy with respect to the Non-Residential Unit (any such amendment to be at the sole cost and expense of the Non-Residential Unit Owner) to provide that such Non-Residential Unit may be used for any purpose which is lawful at the time that such amendment is made. The Non-Residential Unit Owner may not file an amendment to this Declaration with respect to the Non-Residential Unit authorized by this paragraph without notice to the Board of Managers, and any amendment that shall have a material impact on any Residential Unit or any other Non-Residential Unit shall require the consent of the Board of Managers.

6.3. Prohibited Uses of Units. The following uses are prohibited for any Unit; any use that in the reasonable judgment of the Board of Managers would impair or threaten the structural integrity of the Building or the life, health, safety, protection, or security of Unit Owners, tenants, or occupants of Units; any use that violates applicable laws; any use that results in, or in the reasonable judgment of the Board of Managers would result in, the cancellation or notice of cancellation of insurance maintained by the Board of Managers; any use that increases, or in the reasonable judgment of the Board of Managers would increase, the rate of insurance for the Property above the rate in effect at the date of recording the Declaration, unless the Unit Owner reasonable for such increase pays the additional premium therefor as a specially allocated expense; any use inconsistent with or in violation of its permitted use or in the reasonable judgment of the Board of Managers is an unreasonable and substantial annoyance or nuisance to a Unit Owner or tenant of a Unit or an unreasonable, substantial, and repeated interference with the peaceful possession or proper use and enjoyment of another Unit or the Common Elements for their intended or permitted purposes as stated in the Declaration and By-Laws; any use of the Common Elements causing or comprising waste; any use involving the storage, purchase, sale, disposal, or release or other disposition of any hazardous, toxic, or radioactive material, matter, substance, or waste that is or becomes regulated under applicable law (unless the products are properly used and

stored in accordance with applicable law); any use of a Unit or any portion thereof by any international organization, unless such international organization waives its sovereign or diplomatic immunity in conformity with the terms of the Declaration; any change in use that would require a new or amended Certificate of Occupancy that would affect the permitted use of another Unit; or any of the following uses:

- an establishment of any type or nature which uses any portion of a Unit (i) to sell, afford, or permit on premises sexual stimulation or sexual liaisons; (ii) to permit or present obscene, nude, or semi-nude performances, modeling, or sexual services, (iii) to sell or display "rubber goods" or other sexual or erotic products not commonly found in national chain pharmacies; or (iv) to sell, display, rent, or permit the viewing of "X" rated videos, photographs, books, products, or other material
- a facility for the sale of paraphernalia for the use of illicit drugs or controlled substances not commonly found in national chain pharmacies
- an office, clinic, or other facility for drug rehabilitation or treatment center
- a military recruitment office
- a homeless shelter, soup kitchen, or similar use
- any form of spiritualist services, such as a gypsy, fortune teller, palm reader, or card reader
- a laboratory or facility which creates or handles medical or toxic waste
- a funeral parlor, chapel, or facility for the sale or display of tombstones or monuments or other death-related business, including cremation or euthanasia
- a labor union
- a messenger service
- a warehousing or storage facility
- a dry cleaning or other laundry facility or any business that uses toxic chemicals in the normal course of business
- a dating or escort service
- an office or other facility for any local, state, or federal governmental agency
- any use of "barkers" or other similar outdoor solicitation
- a pawn shop
- an off-track betting parlor
- the sale or grooming of pets
- the use or storage of flammable liquids, chemicals, or other incendiary or explosive items, unless incidental to a permitted use and commonly used for cleaning, operating or the like
- a massage parlor

6.4. Use of Parking Units, Storage Units, and Cabana Units. Parking Units, Storage Units, and Cabana Units shall be used in compliance with the certificate of occupancy for such space and any applicable zoning regulations and laws. Parking Units, may be sold or licensed to members of the public, including non-occupants of the Building. Storage Units and Cabana Units may be sold or licensed to Unit Owners or occupants of the Building.

6.5. Use of the Common Elements. Except as otherwise provided herein or in the By-Laws, the Common Elements may be used only for the furnishing of services and facilities to the Unit

Owners, their guests, invitees and licensees as permitted under this Declaration and the By-Laws, and for the other uses for which they are reasonably suited. Access to any Common Elements on the roof is only permitted for the repair or maintenance of such areas, or to maintain or repair any equipment located in such areas. Subject to any easements (exclusive or otherwise) and/or rights of access or as otherwise provided in this Declaration, neither the Board of Managers nor any Unit Owner shall impede the exercise of or encroach upon the rights of Unit Owners or others claiming, by, through or under them, including but not limited to, the occupants of the Units and their respective invitees, to use the Common Elements as permitted under this Declaration and the By-Laws. No furniture, packages or objects of any kind shall be placed in the Common Elements such as lobbies, vestibules, public halls, stairways, or in the areas designated as storage areas without the prior consent of the Board of Managers. The lobbies, vestibules, public halls, and stairways shall be used only for ingress and egress from the Units.

6.5.1. A Non-Residential Unit Owner, its tenants, employees, agents, guests, invitees, and licensees are permitted to access the Common Elements, but only for their intended purposes. Furthermore, in no event shall any guest, invitee or licensee of a Non-Residential Unit Owner be permitted access to any area designated as a Residential Common Element, a Limited Common Element or part of a Residential Unit. Any access to the Residential Common Elements, Limited Common Elements, or Residential Units by a Non-Residential Unit Owner, its tenants, or employees shall only be permitted pursuant to the terms of this Declaration and the By-Laws.

6.5.2. Subject to the consent of a Non-Residential Unit Owner, which shall not be unreasonably withheld, and provided it does not impede or encroach upon the rights of a Non-Residential Unit Owner, Declarant may place appropriate directional and identification signs on the exterior of the Building and signs relating to the marketing of Units for sale or lease by Declarant.

6.6. Violation of Use Restrictions. Each Unit Owner shall be responsible for any violations, fines, and fees imposed as a result of such Unit Owner's failure to comply with the terms of this Article with respect to the use of the Units, and shall indemnify and hold harmless the Condominium, the Board of Managers and all other Unit Owners against any claim or costs in connection with such failure.

6.7. Nuisance. No nuisance shall be allowed in the Property nor shall any use or practice be allowed in the Property which interferes with the peaceful possession or proper use thereof by the Unit Owners or the occupants of their respective Units. No improper, offensive or unlawful use shall be made of the Property or any portion thereof. All applicable laws relating to any portion of the Property shall be complied with at the sole expense of whichever of the Unit Owner(s) shall have such obligation pursuant to the Declaration and the By-Laws to maintain or repair such portion of the Property.

6.8. Prohibited Acts. Unit Owners may not take any of the following actions without the prior written consent of the Board: (i) take any action which would materially diminish the visibility or prominence of another Unit or any signage installed by another Unit Owner in accordance with the terms of this Declaration, or (ii) use or conduct any activities on the sidewalks appurtenant to the Property that materially adversely affects another Unit Owner, except as otherwise permitted by this Declaration and/or the By-Laws.

ARTICLE 7 CHANGES TO THE UNITS

7.1. General.

7.1.1. Any alterations or changes to the Building or the Units other than those changes set forth in the Tax Lot Drawings and the Plans ("Alterations") shall be subject to the restrictions set forth in this Declaration and the By-Laws. All work must be performed pursuant to applicable law, and by licensed and insured contractors. A Non-Residential Unit Owner shall have the right to veto any proposed Alteration that would have a material and adverse effect on their Non-Residential Unit. The Residential Board Members shall have the right to veto any proposed Alteration that would have a material and adverse effect on the Residential Units or the Residential Common Elements. The Board of Managers shall have the right to veto any Alteration that materially and adversely affects any structural elements of the Building, any Building systems that serve other Units, or the Common Elements.

7.1.2. Any Alterations to be made by any Unit Owner that affects, in any material aspect, the façade of the Building (other than signage and storefronts appurtenant to a Non-Residential Unit) or the structural elements of the Building, or require approval from the Landmarks Preservation Commission, shall be subject to the prior consent and approval of the Board of Managers, which shall not be unreasonably withheld, conditioned or delayed.

7.1.3. Whenever a Unit Owner is permitted, pursuant to the terms of this Article, to make Alterations or other changes to its Unit, or to apply to a government agency with respect to the use or Alteration of its Unit without the prior written consent of the other Unit Owners or the Board of Managers, such Unit Owner shall provide the Board of Managers and the other Unit Owners with written notice at least ten (10) business days prior to commencing such Alteration or submitting such application, and include in such notice all documents submitted as part of such application and a full description of the proposed Alteration.

7.2. Alterations by the Declarant and a Non-Residential Unit Owner.

7.2.1. Subject to the provisions of Section 7.1 herein, except to the extent prohibited by law, the Declarant and a Non-Residential Unit Owner shall have the right, without the consent or approval of the Board or other Unit Owners, to:

(a) make Alterations, additions, or improvements, whether structural or non-structural, interior or exterior, ordinary or extraordinary, in, to and upon its Unit(s);

(b) change the layout of, or number of rooms therein;

(c) provided the Alteration does not jeopardize the structural integrity of the Building, change the size of the Unit(s) by (i) subdividing its Unit into two or more separate Units, (ii) combining two or more Units resulting from such subdivision or otherwise into one or more units, (iii) altering the boundary walls between any two or more separate Units resulting from such subdivision or combination, or (iv) with respect to the Residential Units only, otherwise including and incorporating Residential Common Elements into such Residential Unit;

(d) if appropriate, reapportion among the Units affected by such change in size or number pursuant to this article, their respective Common Interests; provided, however, that with respect to any such Alteration:

(i) no physical modification shall be made to any other Unit, and the Common Interest or interior dimensions of any other Unit shall not be changed by reason thereof, unless the Owner of such other affected Unit shall consent thereto;

(ii) any such Alteration or change shall comply with all applicable law;

(iii) the Unit Owner making any such Alteration or change shall agree to hold the Board of Managers and all other Unit Owners harmless from any liability arising therefrom; and

(iv) such Alteration shall not jeopardize the soundness or structural integrity of the Building.

(v) such Alteration shall not diminish the sound insultation properties of the Building or Unit.

7.2.2. Any Alteration may not affect the Common Interests of other Units unless the owners of each Unit affected shall consent thereto.

7.2.3. Without the prior written consent of the Declarant, a Non-Residential Unit Owner may not perform any work in, or apply for any permits to perform work, in its Unit before a final Certificate of Occupancy covering the entire Building is issued by the Department of Buildings.

7.2.4. In the event a Non-Residential Unit is leased, the tenant(s) of such Unit shall have the same rights as the Non-Residential Unit Owner to make alterations, additions or improvements as set forth in this Article, subject to such Unit Owner's consent.

7.3. Alterations to Residential Units. Residential Unit Owners (other than Declarant) may not make any Alterations to their Unit without the prior written consent of the Board of Managers; such consent will not be unreasonably withheld, provided that the addition, alteration, repair or improvement may be made while retaining the structural integrity of the Building. Furthermore, Unit Owners (other than Declarant) may not apply for any permits for construction work in a Unit until after the final Certificate of Occupancy has been issued for the Building by the Department of Buildings. Furthermore, Residential Unit Owners (other than Declarant) may not apply for any permits for construction work in a Residential Unit until after the final Certificate of Occupancy has been issued for the Building by the Department of Buildings.

7.4. Changes to Boundaries and Tax Lot Drawings. Boundaries and components of each Unit are described in detail in this Declaration, and depicted graphically on the Tax Lot Drawings. The boundaries of the Units in the Tax Lot Drawings shall be substantially the same as those in the Plans. Any differences between the Plans and the Tax Lot Drawings shall be subject to the approval of an affected Unit Owner, provided that such approval shall not be unreasonably withheld if such

changes are de minimis. Prior to any de minimis change in the boundaries or change to the Tax Lot Drawings, the party proposing such change shall provide the other party with ten (10) business days' notice of such change, and thereafter the parties may attempt to resolve the issue or in the alterative, the parties may commence arbitration as set forth in the By-Laws to resolve any disagreement. In the event of arbitration, such change shall not be made until the arbitrator has issued their decision, and thereafter the parties will cooperate to effectuate such decision.

ARTICLE 8 EASEMENTS

8.1. Board of Managers Easement to Operate and Maintain the Common Elements. The Board of Managers shall have, and each Unit shall be subject to, an easement and a right of access:

(a) to operate, maintain, repair, alter, rebuild, prevent or minimize damage to, and cause to be in compliance with any applicable laws and insurance requirements, the Common Elements;

(b) to install, operate, maintain, repair, alter and rebuild the Common Elements located in, over, under, through or upon any Unit or elsewhere on the Property; and

(c) to maintain any encroachment on any Unit, resulting from the repair, alteration or rebuilding of the Common Elements.

Access to any Unit or Common Elements in furtherance of such easement shall be exercised in such a manner as will not unreasonably interfere with the normal conduct of business of the tenants and occupants of a Non-Residential Unit, or with the use of the Residential Units for their permitted purposes. Such entry shall be permitted on not less than two (2) days' notice, except that no notice will be necessary in the case of an emergency.

8.2. Ingress and Egress. Each Unit Owner, permitted tenants and occupants of the Building, the Building managing agent, the sales agent employed by the Declarant, and all other officers, partners, employees, agents, guests, invitees and licensees of the foregoing shall have, to the extent reasonably necessary, in common with all other Unit Owners, an easement for ingress to and egress from their Unit. Notwithstanding the foregoing, however, no person shall use or enjoy the Common Elements or Residential Common Elements except in accordance with the reasonable purposes for which they are intended, and without encroaching upon the rights of other persons to do so.

8.3. Utilities.

8.3.1. For so long as Declarant owns a Unit, Declarant shall have the absolute right (without any obligation to obtain the consent of the Board or any other Unit Owner or other part except as required by law) to grant such additional electric, gas, steam or other utility easements or relocate any existing utility easements in any portion of the Property as Declarant shall deem necessary or desirable for the proper operation and maintenance of the Building or any portion thereof, or for the general health or welfare of the owners, tenants, and occupants of the applicable Units, provided that such additional utilities or the relocation of existing utilities will not prevent or unreasonably interfere with the permitted use of Units. Any utility company and its employees

and agents shall have the right of access to any Unit or the Common Elements in furtherance of such easement, provided such right of access shall be exercised in such a manner as shall not reduce the usable square footage of the any Unit nor prevent or unreasonably interfere with the permitted use of Units.

8.3.2. Each Unit Owner, for its benefit, shall have an easement to, and may, without the prior consent of the Board of Managers, the Declarant or other Unit Owners but subject to the provisions of this Declaration pertaining to Alterations: (i) install, operate, maintain, repair, alter, rebuild, restore and replace Units, and any pipes, wires, ducts, flues, vents, cables, conduits or other lines, equipment or facilities forming a part of or relating to the Unit, located in, over, under, through or upon the Common Elements; and (ii) install pipes, wires, ducts, flues, vents, cables, conduits or other lines, equipment or facilities in connection with the design, construction, use, operation and/or occupancy of such Unit in, over, under, through or upon the Common Elements, including but not limited to, penetrating floor slabs; provided that access to the Common Elements or other portions of the Property in furtherance of such easement shall be exercised in such a manner as will not unreasonably interfere with the use of the Common Elements and such other portions of the Property for their permitted purposes or affect the structural integrity of the Building. A Unit Owner shall provide the Board of Managers with prior written notice at least fifteen (15) days prior to filing any applications with the applicable government authorities to perform such work, including the Department of Buildings. The relocation of any pipes, wires, ducts, flues, vents, cables, conduits, or other lines, equipment or facilities after the Building obtains a TCO shall require the prior written consent of the Board of Managers.

8.3.2. To the extent any filings with the New York City Department of Buildings or other municipal agency is necessary for the foregoing or the consent or signature of the Board of Managers is required on any documents, the Board of Managers shall cooperate with respect to the same by timely executing the same, provided all associated expenses are paid by the requesting Unit Owner.

8.4. Repairs and Maintenance.

8.4.1. Provided the Unit Owners are in compliance with all other requirements set forth in this Declaration and the By-Laws, and any regulations promulgated by the Board of Managers, all Unit Owners shall have access through all Common Elements to make repairs and installations, provided that in non-emergency situations the Unit Owners shall notify the Board of their intent to work on equipment servicing their Unit and conduct such work in a manner designed to cause the minimum amount of disturbance to other Unit Owners.

8.4.2. A Non-Residential Unit Owner, and their employees, contractors and invitees, shall have access to Residential Common Elements, including the elevators, and the Residential Units for the purpose of maintaining, replacing or effecting repairs to their respective Units or any systems servicing such Unit. In the event of a non-emergency, the party seeking such access shall notify the Board of Managers and the Residential Unit Owners if applicable of their intent to work on equipment servicing such Unit and conduct such work in a manner designed to cause the minimum amount of disturbance to the Residential Unit Owners.

8.4.3. Access shall be permitted through any portion of the Building in the event of an

emergency.

8.4.4. All work to be performed pursuant to this Section must be performed by licensed and insured contractors, and in accordance with applicable law.

8.5. Storefront and Signage. Subject to the terms of this Declaration, a Non-Residential Unit Owner and the Declarant shall have an easement to erect and maintain signage as set forth herein.

8.5.1 A Non-Residential Unit Owner shall have an easement, to the extent permitted by law, to erect, maintain, repair and replace, from time to time, one or more signs, on the storefront to its Unit provided the same relate solely to the operation of the Unit or for the purpose of advertising the sale or lease of all or any portion of the Non-Residential Unit. The Non-Residential Unit Owner shall not have the right to place or install any sign or other advertisement on any part of the Building other than the storefront without the prior written consent of the Board of Managers.

8.5.2 For so long as Declarant owns a Unit, the Declarant shall have an easement, to the extent permitted by law, to erect, maintain, repair and replace, from time to time, one or more signs on the Building for the purpose of advertising the sale or lease of any Unit in the Condominium, provided such signage does not obstruct permitted signage placed by a Non-Residential Unit Owner, and does not unreasonably obstruct any Residential Unit (other than an Unsold Unit).

8.5.3 Maintenance and repair of the storefront and signage, as well as any Limited Common Elements, fixtures, or improvements, located on the façade appurtenant to the Non-Residential Unit shall be the responsibility of the Non-Residential Unit Owner.

8.6. Construction. Declarant reserves to itself, its successors, assigns, designees, invitees, contractors, agents, employees and tenants, any and all easements and rights of access, in and to Units and Common Elements, to complete construction in a manner consistent with the purposes of the offering plan and to ensure Declarant's rights and obligations thereunder. Declarant shall provide three days' notice except under exigent circumstances where Declarant shall provide reasonable notice. Declarant is obligated to repair any damages caused as the result of the foregoing work. Declarant will not interfere with a Unit Owner's reasonable use of his or her Unit during any work period. However, there may be a temporary limitation as to use of the public areas. Declarant's reservation and rights shall include, but not be limited to:

(i) The right to maintain general, sales and leasing office(s) and personnel on the Premises, to post signs, and to conduct other activities connected with promotion, sales or leasing, such as inspection and display of vacant or licensed Units, as well as all Common Elements, to prospective Purchasers or lessees; and

(ii) Right of access in and to Units and Common Elements for purposes of construction, repair, refurbishment, correction, alterations, finishing, servicing and similar work.

8.7. Communications Equipment. Declarant and/or its designee (and their respective successors and assigns) shall have an easement for so long as the Condominium shall remain in existence: (i) to erect, use, lease, maintain, repair, replace and operate a platform and other facilities for the

purpose of erecting, using, leasing, licensing, maintaining, repairing, replacing and operating antennae, satellite dishes and other communications equipment on any part of any roof of the Building that is not occupied as of the date hereof for any other Building installations or as a common recreational area for the Unit Owners; and (ii) to erect, use, lease, maintain, repair, replace and operate related electronic and other communications equipment in any portion of any mechanical equipment room that is not occupied as of the date hereof by any other Building installations, and the right to erect partitions separating such portion from the balance of such equipment room; in each case, without the consent of, or charge by, the Board of Managers or any other Unit Owners; provided, however, that Declarant (or its designee) shall give prior notice to the Board of Managers of the type and location of any such equipment before installation. Any obligations of Declarant under any lease, license or other right of use granted by Declarant with respect to any roof or the aforesaid mechanical equipment room shall be the obligation solely of Declarant and not of the Condominium and any rights of Sponsor, including, without limitation, the right to receive rent or other consideration for such lease, license or other right of use, shall be the right solely of Declarant and not of the Condominium or the Board of Managers. In connection with such easements and related rights, Declarant and its designee (and their respective successors and assigns) and the respective tenants and licensees shall each have, to the extent necessary or advisable for such erection, use, lease, maintenance, repair, replacement and operation, an easement in common with all Unit Owners for ingress, egress and the use of any Common Elements. The Units shall be subject to such easement. The Unit Owners will not have any interest in the rents, profits or revenues from the rental, use or sale of any such space pursuant to the aforementioned easements and rights.

8.8. Ventilation Ducts. Each Unit Owner shall have in common with all other Unit Owners, and each Unit shall be subject to, an easement to access, operate and maintain ventilation ducts for the purpose of providing fresh air serving the Units located in, over, under, through or upon any Unit and the Common Elements.

8.9. Subjacency, Support and Necessity. Each Unit and the Common Elements shall have easements of subjacency, support and necessity, and the same shall be subject to such easements in favor of all the other Units and the Common Elements.

8.10. Perpetual and Irrevocable. Except as may otherwise be set forth in this Declaration, any easement created or granted hereunder shall be perpetual and irrevocable for so long as the Condominium shall remain in existence.

ARTICLE 9 SERVICE OF PROCESS AND BUILDING CODE VIOLATIONS

The Secretary of State of the State of New York is hereby designated to receive service of process in any action which may be brought against the Condominium. Service of process on Unit Owners with regard to any violation of local building codes, zoning ordinances and other related building and zoning laws pertaining to the Common Elements or one or more of the Units shall be made upon the Board of Managers of The 37-14 34th Street Condominium at 37-14 34th Street, Long Island City, NY 11101, or such other address to be designated by the Board of Managers. Subject to conditions stated in the By-Laws, the Board of Managers shall have the principal responsibility for curing any violations of such building or zoning laws and service upon the Board of Managers shall be deemed service upon the Declarant or Owners of the Condominium Unit or

Units in which any such violations exist.

ARTICLE 10 COMMON INTEREST

Each Unit Owner shall have such percentage interest in the Common Elements as is set forth on Schedule B attached hereto. Each Unit Owner shall be entitled to cast one vote for each .0001% of Common Interest attributable to their Unit(s). Whenever a particular percentage of Common Interest must be reached for voting purposes and such required percentage is in terms of the Unit Owners as a group (as proposed to all Unit Owners as a whole), such required percentage shall mean a percentage in terms of total Common Interests attributable to that particular group and not the percentage of Common Interests attributable to all Unit Owners unless otherwise mandated by law or expressly provided for herein or in the By-Laws. The percentage of interest of each Unit in the Common Elements has been determined by the Declarant based upon the floor area subject to the location of such space and the additional factors of relative value to other spaces in the Condominium, the uniqueness of the Unit, the availability of Common Elements for exclusive or shared use and the overall dimensions of the particular Unit pursuant to § 339-i(1)(iv) of the Real Property Law. The percentage interest of all of the Units in the Condominium totals one hundred percent (100%).

ARTICLE 11 ADMINISTRATION

The Condominium shall be governed by a five (5) member Board of Managers. The principal officers of the Condominium shall be a President, Vice President, Secretary, and Treasurer, all of whom shall be elected by the Board of Managers.

The President shall be the chief executive officer of the Condominium and shall preside at all meetings of the Board of Managers and of Unit Owners.

The Vice President shall take the place of the President and perform their duties whenever the President shall be absent or unable to act.

The Secretary shall be empowered to take and keep minutes of all meetings and to keep the books and records of the Condominium.

The Treasurer shall be responsible for overseeing the finances of the Condominium and for keeping the financial records and books of the Condominium.

The Board of Managers, in its discretion shall delegate powers to officers as it sees fit to execute agreements, contracts, deeds, leases, checks, etc. on behalf of the Condominium.

ARTICLE 12 AMENDMENT AND WITHDRAWAL

12.1. Amendments to the Declaration. Except as otherwise set forth herein, the provisions of this Declaration may only be amended by an instrument executed by the Board of Managers upon the affirmative vote of all Non-Residential Unit Owners and sixty-seven percent (67%) of the Residential Unit Owners in number and Common Interest, except as set forth below. Any amendment to this Declaration shall not take effect until it is recorded in the City Register's Office.

12.1.1. Any amendment altering the Common Interest percentage of a Unit Owner or altering any rights or obligations respecting the Common Elements shall require the written consent of the affected Unit Owner(s).

12.1.2. Any amendment adding any parcel of land or divesting any parcel of land from the Property shall require the unanimous consent of all the Unit Owners.

12.1.3. For a maximum of two (2) years from the date of the recording of the Declaration in the City Register's Office, as long as the Declarant continues to hold fifty-one percent (51%) or more, in number, of the Units, the Declarant's prior written consent shall be required in order to amend either the Declaration or the By-Laws. Furthermore, so long as Declarant shall own Unsold Units constituting twenty-five percent (25%) or more of the Common Interest, or for a period of five (5) years after closing of title to the first Residential Unit under the offering plan filed with the New York State Department of Law, whichever is sooner, the Board of Managers may not, without the prior written consent of the Declarant, (i) make any addition, alteration or improvement to the Common Elements or to any Unsold Unit, or (ii) borrow money on behalf of the Condominium (except where necessary to perform work required by law to the extent that existing reserves are insufficient), or (iii) provide for new or additional services other than those provided for in Schedule B of the offering plan filed with the New York State Department of Law. Declarant shall have the right to withhold its consent to any of the foregoing actions except where otherwise noted. Notwithstanding the above, Declarant's consent shall not be withheld for expenses required to comply with applicable law, to remedy any notice of violation, or to comply with any work order of an insurer. While Declarant has voting control of the Board of Managers, Declarant will not reduce or eliminate the services to be provided to the Condominium as set forth in the offering plan filed with the New York State Department of Law.

12.1.4 Any amendment to the Declaration or By-Laws that would materially and adversely impact the rights and obligations of a Non-Residential Unit Owner, the calculation of Common Charges to be paid by a Non-Residential Unit Owner, or the permitted use of a Non-Residential Unit shall require the consent of the Non-Residential Unit Owner.

12.1.5 Any provision of the Declaration or By-Laws benefiting, protecting or otherwise affecting only the Non-Residential Units or Non-Residential Unit Owners, except for those provisions relating to actions that require Board of Managers consent, may be amended by such Unit Owner, including the subdivision or combining of such Unit, without the consent of the Board or the other Unit Owners. However, such Unit Owner shall provide the Board of Managers and all other Unit Owners with written notice of any such modification at least fifteen (15) days prior to making any such change. The Board of Managers shall cooperate with such Unit Owner's efforts to amend such provision, including executing, acknowledging and delivering any document required to effectuate such amendment.

12.1.6 Any provision of the Declaration or By-Laws benefiting, protecting or otherwise affecting only the Residential Units (including but not limited to the subdivision or combining of Residential Units), the Declarant and/or the Residential Unit Owners may be amended, modified or deleted by the Declarant or the Residential Unit Owners as applicable without the consent of the Board or the other Unit Owners. However, the Declarant or the Residential Unit Owners shall

provide the Board of Managers and all other Unit Owners with written notice of any such modification at least fifteen (15) days prior to making any such change. The Board of Managers shall cooperate with the Declarant's or the Residential Unit Owners' efforts to amend such provision, including executing, acknowledging and delivering any document required to effectuate such amendment.

12.2. Consent of Registered Mortgagees. Registered Mortgagees holding mortgages on Units that constitute a majority of the common interests (except where noted otherwise) of the Units that are subject to Registered Mortgages must consent to: (i) any restoration or repair of the Building after a partial condemnation or damage due to an insurable hazard which is not done in accordance with the Documents (ii) any election to terminate the condominium after substantial destruction or substantial taking in a condemnation; and (iii) any reallocation of Common Interests resulting from a partial condemnation or destruction provided however that the consent of any Registered Mortgagee of a Residential Unit shall not be required for any restoration and or repair under (i) or reallocation under (iii) above with respect to a Non-Residential Unit. Wherever in this section the consent of a Registered Mortgagee or a majority of Mortgagee representatives is required, the written consent of the Sponsor Mortgagee must be given, provided that such Sponsor's Registered Mortgage has not yet been satisfied.

12.2.1. A written notice will be sent certified or registered mail with a "return receipt" requested to Registered Mortgagees and Registered Guarantors notifying them of any material change to the Documents listed in this Article. Approval or consent to any change to the Documents by a Registered Mortgagee will be implied if the Registered Mortgagee fails to submit a response to any written proposal for an amendment within sixty (60) days after it receives proper notice of the proposal, provided the notice was delivered by certified or registered mail, with a "return receipt" requested. Notwithstanding the foregoing, wherever in this section the consent of a Registered Mortgagee or a majority of Mortgagee representatives is required, the written consent of the Sponsor Mortgagee must be given, provided that such Sponsor's Registered Mortgage has not yet been satisfied.

12.3. Withdrawal from Condominium Ownership. The Property shall not be withdrawn from Condominium ownership without the consent of at least eighty percent (80%) of the Unit Owners in number and Common Interest, the Non-Residential Unit Owner, and a least fifty-one percent (51%) of the Registered Mortgagees. Such withdrawal of the property from Condominium ownership shall not take effect until it is duly recorded in the City Register's Office. Notwithstanding the foregoing, wherever in this section the consent of a Registered Mortgagee or a majority of Mortgagee representatives is required, the written consent of the Sponsor Mortgagee must be given, provided that such Sponsor's Registered Mortgage has not yet been satisfied. The Condominium shall terminate following a taking of all or substantially all of the Property by condemnation or eminent domain; or damage or destruction to 75% or more of the Building if 75% or more of all Unit Owners do not duly and promptly elect to proceed with the repair or restoration.

ARTICLE 13 SUBJECT TO DECLARATION, BY-LAWS, etc.

All present or future Unit Owners, tenants, future tenants, or any other person that might use the facilities of the Condominium in any manner, are subject to the provisions of this

Declaration and the By-Laws, and the mere acquisition or rental of any of the Units shall signify that the provisions of the Declaration and the By-Laws of the Condominium are accepted and ratified and all of such provisions shall be deemed and taken to be covenants running with the land and shall bind any person having at any time any interest or estate in such Unit, as though such provisions were recited and stipulated at length in each and every deed, conveyance or lease thereof.

ARTICLE 14 COMMON CHARGES

14.1. Assessment of Common Charges. The Board of Managers shall have the authority, pursuant to the By-Laws, to fix and determine Common Expenses, and allocate and assess Common Expenses amongst the Unit Owners. Common Expenses may be allocated in a manner different from the allocation by Common Interest, as permitted by 339-m of the Condominium Act, the Declaration and the By-Laws, provided that such allocation is based on the proportion of expenses and charges fairly attributable to such Units, based on actual usage of particular services and based upon special or exclusive use or availability or exclusive control of particular Common Elements by particular Unit Owners. The allocations of Common Expenses between Residential Units and Non-Residential Units in the Proposed Budget for the First Year of Condominium Operation, annexed hereto as Schedule D, are presumptive evidence of reasonableness. The Board of Managers may not modify the allocations set forth in Schedule D without the unanimous consent of Non-Residential Unit Owner. The allocations set forth in Schedule D are based solely on projections; future allocations must be based on the proportion of expenses and charges fairly attributable to such Units, based on actual usage of particular services and based upon special or exclusive use or availability or exclusive control of particular Common Elements by particular Unit Owners.

14.2. Lien Against Units. All sums assessed as Common Charges by the Board of Managers of the Condominium but unpaid, together with interest at the maximum legal rate thereon, chargeable to any Unit Owner shall constitute a lien on their Unit prior to all other liens except: (a) tax or assessment liens on the Unit by any governmental taxing authority, including but not limited to, State, County, and City taxing agencies, if any; and (b) all sums unpaid on any mortgage of record encumbering any Unit. Such lien may be foreclosed when past due in accordance with the laws of the State of New York by the Condominium in like manner as a mortgage on real property, and costs incurred including reasonable attorney's fees (but such right shall not be a lien against the Unit). In the event the proceeds of the foreclosure sale are not sufficient to pay such unpaid Common Charges, the unpaid balance shall be charged to all Unit Owners as a Common Expense. However, the holder of an institutional mortgage of record or other purchaser of a Unit at a foreclosure sale, their successors or assigns, shall not be liable and the Unit shall not be subject to a lien for the payment of Common Charges chargeable to such Unit which were assessed and became due prior to the acquisition of title to such Unit by such acquirer. In such event, the unpaid balance of Common Charges shall be charges to all Unit Owners as a Common Expense. The term "institutional mortgage" used herein shall mean a mortgage granted by a federal or state savings and loan association, savings or commercial bank, life insurance company, pension fund, trust company, real estate investment trust, real estate mortgage investment conduit, agency of the United States Government or of the City or State of New York, or other similar institutional lender or a purchase money mortgage granted by the Seller or any entity not included within any of the foregoing that is regularly engaged in the business of making, owning or servicing mortgage loans.

14.3. Unit Owners' Obligation to Pay Common Charges. Every Unit Owner shall pay the Common Charges assessed against their Unit when due and no Unit Owner may exempt themselves from liability for the payment of their Common Charges by waiver of the use or enjoyment of any of the Common Elements or by the abandonment of their Unit. However, no Unit Owner shall be liable for the payment of any Common Charges accruing subsequent to a sale, transfer or other conveyance by themselves of such Unit made in accordance with Section 339-x of the Real Property Law or in accordance with the provisions of this Declaration and the By-Laws.

ARTICLE 15 UNITS ACQUIRED BY THE BOARD

In the event any Unit Owner shall convey their Unit to the Board of Managers in accordance with Section 339-x of the Real Property Law or in the event the Board of Managers shall purchase any Unit at a foreclosure sale in accordance with the By-Laws, title to such Unit or the rights to the lease of such Unit shall be held by the Board of Managers or its designee on behalf of all of the other Unit Owners.

In order to carry out the provisions of this paragraph, each Unit Owner shall, upon taking title to their Unit, grant an irrevocable power of attorney coupled with an interest, to the Board of Managers and their successors to acquire title or lease any such Unit under whatever terms the Board of Managers may, in its sole discretion, deem proper and to sell, lease, sublease, mortgage, vote or otherwise deal with such Unit under such terms as the Board of Managers, in its sole discretion, shall deem proper.

ARTICLE 16 ENCROACHMENTS

The Unit Owners agree that if any portion of a Unit or the Common Elements (whether restricted in use to an individual Unit Owner or not) encroaches upon another or shall hereafter encroach upon another as a result of original construction or settling of the Building, a valid easement for the encroachment and the maintenance of the same, so long as it stands, shall and does exist. In the event the Building is partially or totally destroyed as a result of fire or other casualty or as a result of condemnation or eminent domain proceedings and is rebuilt, the Unit Owners agree that encroachments of any portion of the Unit or the Common Elements as aforedescribed due to construction shall be permitted and that a valid easement for said encroachment and the maintenance thereof shall exist as long as the Building or reconstructed building shall stand.

ARTICLE 17 UNIT OWNERSHIP

17.1. Upon the closing of title to a Unit, a purchaser shall automatically become a Unit Owner in the Condominium and shall remain a Unit Owner until such time as the purchaser ceases to own the Unit for any reason.

ARTICLE 18 CONVEYANCE OF A UNIT

Upon any conveyance of a Unit, either by voluntary instrument, operation of law or judicial proceedings in accordance with this Declaration or the By-Laws, the grantee of the Unit shall be jointly and severally liable with the grantor for any unpaid Common Charges against the latter assessed and due up to the time of the grant or conveyance without prejudice to the grantee's right to recover from the grantor the amounts paid by the grantee therefor. Any such grantee shall be entitled to a statement from the Board of Managers setting forth the amount of the unpaid Common Charge against the grantor and such grantee shall not be liable for, nor shall the Unit conveyed be subject to a lien, for any unpaid Common Charge against the grantor in excess of the amount set forth in such statement. Grantee as used herein shall not include either the holder of an institutional mortgage of record or other purchaser of a Unit at a foreclosure sale of an institutional mortgage.

ARTICLE 19 COVENANTS AND RESTRICTIONS

The use of a Unit by the Unit Owner or other occupant shall be subject to the rules, regulations, and provisions of this Declaration and the By-Laws and the following covenants and restrictions:

(a) The Unit and Common Elements exclusively servicing or benefitting such Unit shall be maintained in good repair, and Non-Residential Units shall be kept neat and presentable.

(b) No Alterations to the inside of a Unit that would impair the structural soundness of the Building may be made without the prior written consent of the Board of Managers.

(c) Any Unit Owner who mortgages or sells their Unit shall notify the Board of Managers and provide the name and address of their mortgagee or purchaser.

(d) The Board of Managers shall, at the request of a Registered Mortgagee, report any unpaid Common Charges due from the Unit Owner of such Unit.

(e) No nuisances shall be allowed upon the Property and no use or practice shall be allowed which interfere with the peaceful possession and proper use of the Property by its residents.

(f) No immoral, improper, offensive or unlawful use shall be made of the Property or any part thereof and all valid laws, zoning ordinances and regulations of all governmental bodies having jurisdiction thereof shall be observed.

(g) The Common Charges shall be paid when due.

ARTICLE 20 UTILITIES

Each Unit Owner shall be responsible for paying for the costs of separately sub-metered utilities for their Unit. Commonly metered utilities will be paid by the Board of Managers as a Common Expense, and the costs allocated among the Unit Owners as Common Charges according to the provisions of Article 14.

ARTICLE 21 INVALIDITY

Invalidation of any of the covenants, limitations or provisions of the Declaration by judgment or court order shall in no way affect any remaining part or parts hereof, and the same shall continue in full force and effect.

ARTICLE 22 WAIVER

No provision contained in this Declaration shall be deemed to have been abrogated or waived by reason of any failure to enforce the same, irrespective of the number of violations or breaches which may occur.

ARTICLE 23 CAPTIONS

The captions herein are inserted only as a matter of convenience and for reference, and in no way define, limit or describe the scope of this Declaration or the intent of any provision hereof.

ARTICLE 24 CERTAIN REFERENCES

24.1. A reference in this Declaration to any one gender, masculine, feminine or neuter, includes the other two, and the singular includes the plural and vice versa, unless the context otherwise requires.

24.2. The terms "herein", "hereof", or "hereunder" or similar terms in this Declaration refer to this entire Declaration and not to the particular provision in which the terms are used, unless the context otherwise requires.

24.3. Unless otherwise stated, all references herein to Articles, Sections or other provisions are references to Articles, Sections or other provisions of this Declaration.

ARTICLE 25 SEVERABILITY

If any provision of this Declaration or the application thereof to any person, entity or circumstance, is determined to be invalid or unenforceable to any extent, the remainder of this Declaration, and the application of such provision to persons, entities or circumstances other than those as to which it is specifically determined to be invalid or unenforceable, shall not be affected thereby, and each provision of this Declaration shall be valid and enforced to the fullest extent permitted by law, provided that under all circumstances, the provisions hereof are required to be interpreted and applied so that there will be no adverse effect on Declarant or any other person governed by or otherwise affected by this Declaration in any material respect as a result of any invalidity or unenforceability referred to above in this Article.

ARTICLE 26 COVENANT OF FURTHER ASSURANCES

26.1. General. Any party which is subject to the terms of this Declaration, whether such party is a Unit Owner, a lessee or sublessee of a Unit Owner, an occupant of a Unit, a member or officer of

the Board or otherwise, shall upon prior reasonable written request at the expense of any such other party requesting the same, execute, acknowledge and deliver to such other party such instruments, in addition to those specifically provided for herein, and take such other action as such other party may reasonably request to effectuate the provisions of this Declaration or of any transaction contemplated herein or to confirm or perfect any right to be created or transferred hereunder or pursuant to any such transaction.

26.1.1. If any Unit Owner or any other party which is subject to the terms of this Declaration fails, within sixty (60) days after request therefor, to execute, acknowledge or deliver any instrument, or to take any action which Unit Owner or party is required to execute, acknowledge and deliver or to take pursuant to this Declaration, then the Board of Managers is hereby authorized as attorney in fact for such Unit Owner or other party, coupled with an interest, to execute, acknowledge and deliver such instrument, or to take such action in the name of such Unit Owner or other party and such document or action shall be binding on such Unit Owner or other party.

26.1.2. If any Unit Owner, the Board or any other party which is subject to the terms of this Declaration fails, within sixty (60) days after request therefor, to execute, acknowledge or deliver any instrument, or to take any action which such Unit Owner, the Board or party is required to perform, execute, acknowledge and deliver pursuant to this Declaration at the request of Declarant or its designee, then Declarant or its designee is hereby authorized, as attorney in fact for such Unit Owner, the Board or other party, coupled with an interest, to execute, acknowledge and deliver such instrument or take such instrument or to take such action in the name of such Unit Owner, the Board or other party and such document or action shall be binding on such Unit Owner, the Board or other party, as the case may be.

26.2. Estoppel and Agreement. Upon the request of a Unit Owner, the Board of Managers will enter into an estoppel and agreement with such Unit Owner or an existing or proposed lender in form reasonably acceptable to such Unit Owner or existing or proposed lender, and which by its terms may be relied on by the Unit Owner's existing or proposed lender. The estoppel and agreement shall contain all or any of the following representations and statements to the extent requested by the Unit Owner:

(a) confirmation that the Declaration and By-Laws, as amended to date, are complete, correct and in full force and effect;

(b) a statement as to the amount of Common Charges and assessments and all other amounts due to the Condominium by the Unit Owner at the time specified by the Unit Owner, and confirmation of all payments made to that date and a statement as to the monthly Common Charges and special assessments payable following a closing;

(c) confirmation of the then current budget of the Condominium and the amounts payable by the applicable Unit Owner, and an agreement that the calculation of payments due from the Unit Owner or services provided to the Unit Owner will not be changed without its consent;

(d) an agreement to deliver all notices that are sent to the Unit Owner to its lender or lender's designee at the address provided;

(e) confirmation that any lender to a Unit Owner shall be deemed a "Permitted Mortgagee", or "Registered Mortgagee" if they perform the actions set forth in Article 2 hereof, by the Condominium;

(f) confirmation that the current use of the Unit does not violate the terms of the Declaration and By-Laws;

(g) agreement that the tenant of a Unit Owner is a third-party beneficiary of the obligations of the Condominium to the Unit Owner;

(h) confirmation to the lender of the provisions of the Declaration allowing the applicable Unit Owner to make alterations to the Unit with or without any consent, as the case may be, and an agreement to permit the tenant of the Unit Owner to undertake such alterations if designated by the Unit Owner to do so;

(i) agreement that the Condominium shall have the same rights to consent to the actions of the tenant of a Unit Owner as it does to an action of the Unit Owner;

(j) agreement to provide the lender of a Unit Owner ten (10) days' prior notice of any action or sanction that the Board of Managers has determined to take against the Unit Owner; and

(k) a confirmation to the lender of a Unit Owner that it knows of no posted violations against the Unit or pending bankruptcy with respect to the Unit Owner other than those set forth in the estoppel and agreement.

26.3. Further Assurances Requested by Declarant. Without intending to limit the generality of the foregoing, the Board of Managers and each Unit Owner shall be required, upon the request of Declarant, to execute and delivery any or applications reasonably required in connection with any merger, any declaration of zoning lot restrictions or any zoning lot development agreement.

ARTICLE 27 SUCCESSORS AND ASSIGNS

Except as set forth herein or in the Declaration to the contrary, the rights and/or obligations of each Unit Owner set forth herein shall inure to the benefit of and be binding upon any successor or assign of each Unit Owner. However, the rights of Declarant set forth herein shall not inure to the benefit of a Unit Owner acquiring a Unit from Declarant pursuant to an offering plan filed with the New York State Department of Law. Except as set forth herein or in the By-Laws to the contrary, the rights and/or obligations of Declarant or its designee as set forth herein shall inure to the benefit of and be binding upon any successor or assign of Declarant or its designee, or with the consent of Declarant or its designee, any transferee of some or all of the Unsold Units then owned by Declarant or its designee, as the case may be. Subject to the foregoing, Declarant and its designee shall have the right, at any time, in their sole discretion, to assign or otherwise transfer

their respective interests herein, whether by sale, merger, consolidation, lease, assignment or otherwise.

ARTICLE 28 NOTICE AND CONSENTS

Whenever a Unit Owner is permitted, pursuant to the terms of this Declaration, to make Alterations or other changes to its Unit, the Declaration or the By-Laws, or to apply to a government agency with respect to the use or Alteration of its Unit without the prior written consent of the other Unit Owners or the Board of Managers, such Unit Owner shall provide the Board of Managers and the other Unit Owners written notice at least fifteen (15) days prior to commencing any such alteration or submitting such application.

Whenever the consent, approval, satisfaction or permission of Declarant or its designee is required under this Declaration or the By-Laws, such consent, approval, satisfaction or permission will not be required when Declarant or such designee no longer owns any Units.

ARTICLE 29 INCORPORATION BY REFERENCE

The terms, covenants, conditions, descriptions and other information contained in (i) the property description annexed hereto as Schedule A; (ii) the description of the Units annexed hereto as Schedule B; (iii) the By-Laws annexed hereto as Schedule C; (iv) the schedule providing allocation of Common Expenses among the Units annexed hereto as Schedule D; and (v) the Tax Lot Drawings, are each incorporated herein by this reference and made a part of this Declaration as if set forth at length in the text hereof.

ARTICLE 30 AUTHORIZATION TO BORROW

The Board of Managers is authorized, subject to the restrictions set forth in the By-Laws, to incur debt on behalf of Unit Owners to provide for major and minor maintenance, repairs, additions, improvements, replacements, working capital, bad debts and unpaid Common Expenses, insurance, depreciation, obsolescence and similar purposes. The repayment of any and all such debt may be secured and paid as provided in Section 339-jj of the New York Real Property Law.

ARTICLE 31 POWER OF ATTORNEY

31.1 Each Unit Owner shall grant to the Board of Managers an irrevocable limited power of attorney, coupled with an interest (in such form and content as the Board of Managers shall determine) following due authorization (if required) from the Unit Owners (a) to acquire or lease any Unit, together with its Appurtenant Interest (as defined hereinafter) whose owner desires to sell, convey, transfer, assign, lease or surrender the same, or which becomes the subject of a foreclosure or other similar sale, on such terms and at such price or rental, as the case may be, as the attorneys-in-fact deem proper, in the name of the Board of Managers or its designee, corporate or otherwise, on behalf of all Residential Unit Owners, and after any such acquisition or leasing, to convey, sell lease, sublease, mortgage or otherwise deal with (but not vote the interest appurtenant thereto) any such Unit so acquired, or to sublease any Unit so leased, without the

necessity of further authorization by the Unit Owners, on such terms as the attorneys-in-fact may determine; and (b) to commence, pursue, appeal, settle and/or terminate administrative and certiorari proceedings to obtain reduced real estate tax assessments with respect to the Units, including retaining counsel and taking any other action which the Board of Managers deems necessary or appropriate to comply with any law, ordinance, regulation, zoning resolution or requirement of the Department of Buildings, the City Planning Commission, the Board of Standards and Appeals, or any other public authority, applicable to the Maintenance of the Building or the Property, respectively or any consent, covenant, restriction, easement or declaration, or any amendment thereto, affecting the Property which the Board of Managers deems necessary or appropriate.

31.2 Each Unit Owner shall also grant to Declarant a power of attorney to amend the Condominium Declaration and to effectuate the rights granted to Declarant and Unit Owners under the Declaration as set forth herein.

IN WITNESS WHEREOF, Declarant has caused this Declaration to be executed as of the _____ day of_____ 20___.

DECLARANT:
3714 LIC DEVELOPMENT LLC

By: _____
Name:
Title:

STATE OF NEW YORK):
SS.:
COUNTY OF):

On the _____ day of _____, 20___, before me, the undersigned, personally appeared, _____ personally known to me or proved to me on the basis of satisfactory evidence to be the individual(s) whose name(s) is (are) subscribed to the within instrument, and acknowledged that they executed the same in their capacity(ies), and that by their signature(s) on the instrument, the individual acted, executed the instrument.

_____
NOTARY PUBLIC

SCHEDULE A TO THE DECLARATION OF THE CONDOMINIUM

The 37-14 34th Street Condominium
37-14 34th Street
Long Island City, NY 11101
Queens County

TAX BLOCK 375

DESCRIPTION OF THE LAND

ALL that certain plot, piece or parcel of land, situate, lying and being in the Borough and County of Queens, City and State of New York, being more particularly described as follows:

BEGINNING at a point on the easterly side of 33rd Street, formerly Rapelje Street, distant 111.27 feet southerly from the corner formed by the intersection of the easterly side of 33rd Street with the southerly side of 37th Avenue, formerly Webster Avenue;

RUNNING THENCE easterly at right angles to the easterly side of 33rd Street, 195.21 feet to the westerly side of 34th Street, formerly Briell Street;

THENCE southerly along the westerly side of 34th Street, 100 feet;

THENCE westerly again at right angles to the easterly side of 33rd Street, 195.21 feet to the easterly side of 33rd Street;

THENCE northerly along the easterly side of 33rd Street, 100 feet to the point or place of BEGINNING.

SCHEDULE B TO THE DECLARATION OF THE CONDOMINIUM

The 37-14 34th Street Condominium
37-14 34th Street
Long Island City, NY 11101
Queens County

TAX BLOCK 375

UNIT SCHEDULE

UNIT	TAX LOT	COMMON INTEREST PERCENTAGE	BDRMS	BATHS	LOCATION	APPROX. SQUARE FOOTAGE	LIMITED COMMON ELEMENT ("LCE")	APPROX. SQUARE FOOTAGE OF LCE
N2A		0.7017%	0	1	2nd Floor	435.50		0.00
N2B		0.7017%	0	1	2nd Floor	437.20		0.00
N2C		0.9167%	1	1	2nd Floor	678.60		0.00
N2D		1.4983%	2	2	2nd Floor	961.03	Terrace	537.80
N3A		0.9483%	1	1	3rd Floor	631.80	Balcony	60.00
N3B		0.7144%	0	1	3rd Floor	452.50		0.00
N3C		0.7144%	0	1	3rd Floor	433.20		0.00
N3D		0.9230%	1	1	3rd Floor	654.30		0.00
N3E		0.9230%	1	1	3rd Floor	658.30		0.00
N3F		0.9230%	1	1	3rd Floor	674.50		0.00
N3G		0.9483%	1	1	3rd Floor	667.50	Balcony	60.00
N3H		0.7207%	0	1	3rd Floor	421.80		0.00
N3I		0.9799%	1	1	3rd Floor	657.20	Balcony	60.00
N4A		0.9672%	1	1	4th Floor	631.86	Balcony	60.00
N4B		0.7333%	0	1	4th Floor	452.50		0.00
N4C		0.7333%	0	1	4th Floor	433.20		0.00
N4D		0.9420%	1	1	4th Floor	654.30		0.00
N4E		0.9420%	1	1	4th Floor	658.30		0.00
N4F		0.9420%	1	1	4th Floor	674.50		0.00
N4G		0.9672%	1	1	4th Floor	667.50	Balcony	60.00
N4H		0.7460%	0	1	4th Floor	421.80		0.00
N4I		0.9988%	1	1	4th Floor	657.20	Balcony	60.00
N5A		0.9862%	1	1	5th Floor	631.80	Balcony	60.00
N5B		1.4856%	2	2	5th Floor	917.80		0.00
N5C		0.9483%	1	1	5th Floor	646.30		0.00
N5D		0.9483%	1	1	5th Floor	646.30		0.00
N5E		0.9483%	1	1	5th Floor	662.50		0.00
N5F		1.3592%	2	1	5th Floor	837.30	Balcony	60.00
N5G		1.5172%	2	2	5th Floor	909.20	Balcony	60.00
N6A		1.7069%	2	2	6th Floor	1,042.00	Terrace	404.45
N6B		1.2960%	2	1	6th Floor	794.10	Terrace	128.50
N6C		0.9799%	1	1	6th Floor	646.35		0.00
N6D		0.9799%	1	1	6th Floor	662.50		0.00

N6E		1.3908%	2	1	6th Floor	837.30	Balcony	60.00
N6F		1.5805%	2	2	6th Floor	909.20	Balcony	60.00
N7A		1.7069%	2	2	7th Floor	1,042.00	Terrace	212.70
N7B		2.5287%	3	2	7th Floor	1,435.60	Terrace	547.00
N7C		1.4224%	2	1	7th Floor	837.30	Balcony	60.00
N7D		1.6121%	2	2	7th Floor	909.20	Balcony	60.00
S2A		0.7017%	0	1	2nd Floor	435.50		0.00
S2B		0.7017%	0	1	2nd Floor	437.20		0.00
S2C		0.9167%	1	1	2nd Floor	679.50		0.00
S2D		1.5805%	2	2	2nd Floor	967.80	Terrace	537.80
S3A		0.9483%	1	1	3rd Floor	631.80	Balcony	60.00
S3B		0.7144%	0	1	3rd Floor	452.60		0.00
S3C		0.7144%	0	1	3rd Floor	433.20		0.00
S3D		0.9230%	1	1	3rd Floor	654.30		0.00
S3E		0.9230%	1	1	3rd Floor	658.30		0.00
S3F		0.9230%	1	1	3rd Floor	675.18		0.00
S3G		1.2960%	2	1	3rd Floor	844.10	Balcony	60.00
S3H		1.4856%	2	2	3rd Floor	909.20	Balcony	60.00
S4A		0.9672%	1	1	4th Floor	631.80	Balcony	60.00
S4B		0.7333%	0	1	4th Floor	452.60		0.00
S4C		0.7333%	0	1	4th Floor	433.20		0.00
S4D		0.9420%	1	1	4th Floor	654.30		0.00
S4E		0.9420%	1	1	4th Floor	658.30		0.00
S4F		0.9420%	1	1	4th Floor	675.10		0.00
S4G		1.3276%	2	1	4th Floor	844.10	Balcony	60.00
S4H		1.3908%	2	2	4th Floor	909.20	Balcony	60.00
S5A		0.9862%	1	1	5th Floor	631.80	Balcony	60.00
S5B		0.7460%	0	1	5th Floor	453.00		0.00
S5C		0.7460%	0	1	5th Floor	435.00		0.00
S5D		0.9609%	1	1	5th Floor	652.00		0.00
S5E		0.9609%	1	1	5th Floor	658.30		0.00
S5F		0.9609%	1	1	5th Floor	675.10		0.00
S5G		1.3592%	2	1	5th Floor	844.10	Balcony	60.00
S5H		1.4224%	2	2	5th Floor	909.20	Balcony	60.00
S6A		1.6437%	2	2	6th Floor	1,042.00	Terrace	404.80
S6B		1.2960%	2	1	6th Floor	794.10	Terrace	128.50
S6C		0.9925%	1	1	6th Floor	646.35		0.00
S6D		0.9925%	1	1	6th Floor	663.17		0.00
S6E		1.3908%	2	1	6th Floor	844.10	Balcony	60.00
S6F		1.5172%	2	2	6th Floor	909.00	Balcony	60.00
S7A		1.7069%	2	2	7th Floor	1,042.04	Terrace	212.70
S7B		2.5287%	3	2	7th Floor	1,443.23	Terrace	547.00
S7C		1.4224%	2	1	7th Floor	844.10	Balcony	60.00
S7D		1.6121%	2	2	7th Floor	909.20	Balcony	60.00
P1		0.1011%			Cellar	153.00		
P2		0.1011%			Cellar	153.00		
P3		0.1011%			Cellar	153.00		
P4 (ADA)		0.1011%			Cellar	153.00		
P5		0.1011%			Cellar	153.00		
P6		0.1011%			Cellar	153.00		

P7		0.1011%			Cellar	153.00		
P8 (A)		0.1011%			Cellar	139.00		
P9 (A)		0.1011%			Cellar	139.00		
P10 (A)		0.1011%			Cellar	139.00		
P11 (A)		0.1011%			Cellar	139.00		
P12 (A)		0.1011%			Cellar	139.00		
P13 (A)		0.1011%			Cellar	139.00		
P14 (A)		0.1011%			Cellar	139.00		
P15 (A)		0.1011%			Cellar	139.00		
P16 (A)		0.1011%			Cellar	139.00		
P17 (A)		0.1011%			Cellar	139.00		
P18 (A)		0.1011%			Cellar	139.00		
P19 (A)		0.1011%			Cellar	139.00		
P20 (A)		0.1011%			Cellar	139.00		
P21 (A)		0.1011%			Cellar	139.00		
P22 (A)		0.1011%			Cellar	139.00		
P23 (A)		0.1011%			Cellar	139.00		
P24 (A)		0.1011%			Cellar	139.00		
P25 (A)		0.1011%			Cellar	139.00		
P26 (A)		0.1011%			Cellar	139.00		
P27 (A)		0.1011%			Cellar	139.00		
P28 (A)		0.1011%			Cellar	139.00		
P29 (A)		0.1011%			Cellar	139.00		
P30 (A)		0.1011%			Cellar	139.00		
P31 (A)		0.1011%			Cellar	139.00		
P32 (A)		0.1011%			Cellar	139.00		
P33 (A)		0.1011%			Cellar	139.00		
P34 (A)		0.1011%			Cellar	139.00		
P35 (A)		0.1011%			Cellar	139.00		
P36 (A)		0.1011%			Cellar	139.00		
P37 (A)		0.1011%			Cellar	139.00		
P38 (A)		0.1011%			Cellar	139.00		
P39 (A)		0.1011%			Cellar	139.00		
P40 (A)		0.1011%			Cellar	139.00		
P41 (A)		0.1011%			Cellar	139.00		
P42		0.1011%			Cellar	243.00		
P43 (ADA)		0.1011%			Cellar	243.00		
NC1		0.1517%			Cellar	315.00		
NC2		0.1644%			Cellar	382.00		
NC3		0.1517%			Cellar	277.00		
SC1		0.1517%			Cellar	315.00		
SC2		0.1644%			Cellar	382.00		
SC3		0.1517%			Cellar	277.00		
S1		0.0316%			Cellar	18.00		
S2		0.0316%			Cellar	20.00		
S3		0.0253%			Cellar	14.00		
S4		0.0253%			Cellar	14.00		
S5		0.0253%			Cellar	14.00		
S6		0.0253%			Cellar	14.00		
S7		0.0253%			Cellar	14.00		

S8		0.0253%			Cellar	14.00		
S9		0.0253%			Cellar	14.00		
S10		0.0253%			Cellar	14.00		
S11		0.0253%			Cellar	14.00		
S12		0.0253%			Cellar	14.00		
S13		0.0253%			Cellar	14.00		
S14		0.0253%			Cellar	13.30		
S15		0.0253%			Cellar	14.70		
S16		0.0253%			Cellar	14.00		
S17		0.0253%			Cellar	14.00		
S18		0.0253%			Cellar	14.00		
S19		0.0253%			Cellar	14.00		
S20		0.0316%			Cellar	20.00		
S21		0.0278%			Cellar	16.70		
S22		0.0253%			Cellar	14.00		
S23		0.0253%			Cellar	14.00		
S24		0.0253%			Cellar	14.00		
S25		0.0253%			Cellar	14.00		
S26		0.0253%			Cellar	14.00		
S27		0.0253%			Cellar	13.80		
S28		0.0278%			Cellar	17.00		
S29		0.0253%			Cellar	14.00		
S30		0.0253%			Cellar	14.00		
S31		0.0253%			Cellar	14.00		
S32		0.0253%			Cellar	14.00		
S33		0.0253%			Cellar	14.00		
S34		0.0253%			Cellar	15.00		
S35		0.0253%			Cellar	14.00		
S36		0.0253%			Cellar	14.00		
S37		0.0253%			Cellar	14.00		
S38		0.0253%			Cellar	14.00		
S39		0.0253%			Cellar	14.00		
S40		0.0253%			Cellar	14.00		
S41		0.0316%			Cellar	20.00		
S42		0.0278%			Cellar	16.70		
Commercial Unit		7.5862%	0	2	1st Floor	12,605.54		

SCHEDULE C TO THE DECLARATION OF THE CONDOMINIUM

The 37-14 34th Street Condominium
37-14 34th Street
Long Island City, NY 11101
Queens County

BY-LAWS

ARTICLE I GENERAL

1.1 Purpose. The purpose of these By-Laws is to set forth the rules and procedures concerning the conduct of the affairs of The 37-14 34th Street Condominium (the "Condominium"). The Condominium covers the fee interests in the property (the "Property") consisting of approximately 19,500 square feet of land (the "Land") formerly designated as Block 375, 24 on the Tax Map of the Borough of Queens, County of Queens, City and State of New York, the Building and other improvements now or hereafter to be constructed thereon or therein, as the case may be (hereinafter collectively called the "Building"), including, without limitation, the Units and the Common Elements, all easements, rights and appurtenances belonging thereto, and all other property, real, personal or mixed, intended for use in connection therewith, all of which have been submitted to the provisions of Article 9-B of the Real Property Law of the State of New York by the recording of the Declaration (which, as the same may be amended from time to time, is herein called the "Declaration") by 3714 LIC DEVELOPMENT LLC ("Sponsor" or "Declarant") in the City Register's Office, together with these By-Laws.

1.2. By-Laws Applicability. The provisions of these By-Laws are applicable to the Condominium and the Common Elements, and the use and occupancy thereof.

1.3. Personal Application. All present and future Unit Owners, mortgagees, lessees, or their employees, guests, invitees or any other person that might use the facilities of the Condominium in any manner are subject to these By-Laws, the Declaration and the Rules and Regulations established by the Board of Managers. The mere acquisition or rental of any of the Units or the mere act of occupancy of any of said Units will signify that these By-Laws, the Declaration and the Rules and Regulations are accepted, ratified, and will be complied with. Failure to comply with any of the same shall be grounds for an action to recover sums due, for damages or injunctive relief, or both, by the Board of Managers or in a proper case, an aggrieved Unit Owner. In the case of flagrant or repeated violation the Board of Managers may ask the offending Unit Owner for sufficient surety for future compliance.

1.4. Definitions. Any capitalized words herein that are undefined in these By-Laws shall have the same definitions as listed in the Declaration.

1.5. Principal Office of the Condominium. The principal office of the Condominium shall be located within the Property or at such other place within the City of New York reasonably

convenient thereto, as may be designated from time to time by the Board of Managers.

ARTICLE II BOARD OF MANAGERS

2.1. General Description of Board of Managers. The affairs of the Condominium shall be managed by a five (5) member Board of Managers comprised of two (2) members to be designated by the Commercial Unit Owners (the "Non-Residential Board Member") and three (3) members to be designated or elected by the Residential Unit Owner(s) (the "Residential Board Members"). During the Control Period, the affairs of the Condominium shall be managed by a one (1) member Board of Managers designated by the Declarant.

2.2. Control by Declarant. Declarant reserves the right to control the Board of Managers for a period of time until the earlier to occur of (a) thirty (30) days after the date by which one hundred percent (100%) of the Units have been conveyed to Unit Purchasers; or (b) five (5) years after the date the first Residential Unit has been conveyed to a Unit Purchaser pursuant to an offering plan filed with the New York State Department of Law (the "Control Period"). However, as long as Sponsor or Successor Sponsor owns a Unit, it will be entitled to appoint one (1) Residential member of the Board of Managers and Declarant shall be entitled to cast one vote for each .0001% of Common Interest attributable to their Unit(s). In the event that there is a Successor Sponsor and Declarant still owns a Unit, only Declarant may appoint one (1) Residential member of the Board of Managers. Declarant reserves the right to relinquish control of the Board of Managers prior to the expiration of the Control Period.

2.3. Eligibility Requirements for Board Members. With the exception of those members elected or designated by the Declarant or Non-Residential Unit Owners, only a Unit Owner, the principal or officer of a Unit Owner, or the spouse of a Unit Owner not in arrears, with regards to Common Charges, are eligible for election to the Board of Managers. If the Board of Managers perfects a lien against a Unit where the Unit Owner, the principal or officer of a Unit Owner, or the spouse of a Unit Owner is a Board Member, the Board Member shall be removed and replaced as set forth in these By-laws.

2.4. Election of Residential Board Members; Designation of Non-Residential Board Members; Change in Number of Board Members.

2.4.1. All elections of Residential Board Members shall be determined by plurality vote. When voting for Residential Members of the Board of Managers, the voting shall be by ballot and each ballot shall state the name of the Residential Unit Owner voting and the percentage of Residential Common Interests owned by such Unit Owner, and in addition, the name of the proxy if such ballot is cast by a proxy. Each Residential Unit Owner shall be entitled to cast the number of votes determined in accordance with Article III, Section 3.3 for each member to be elected by the Unit Owners. Nothing contained in these By-Laws shall be deemed to permit cumulative voting.

2.4.2. Notwithstanding any other provisions of this Article or any other provisions of these By-Laws to the contrary, commencing with the first annual meeting of the Unit Owners, the Declarant shall have the right to vote all of the Common Interests attributable to Units owned by

Declarant. Declarant shall have the right to designate all of the Residential Board Members during the Control Period. Notwithstanding the foregoing, Declarant may, at its discretion, relinquish voting control of the Board of Managers prior to the end of the Control Period. So long as Declarant owns at least one (1) Unit, Declarant shall have the right to designate one (1) Residential Board Member.

2.4.3 The Non-Residential Board Members shall be designated by the Non-Residential Unit Owners.

2.4.4 The number of members of the Board of Managers may not be changed without the consent of Residential Unit Owners representing fifty-one percent (51%) of the Residential Common Interests, the Non-Residential Unit Owner, and the Declarant for so long as Declarant owns at least one (1) Unit.

2.5. Duties of the Board of Managers. The Board of Managers shall have the duties necessary for or incidental to the administration of the affairs of the Condominium, and shall make all decisions and take all actions affecting the Condominium and the Common Elements not otherwise delegated to the one or both of the Non-Residential Board Members or the Residential Board Members herein.

2.5.1 Notwithstanding anything to the contrary in these By-Laws, all determinations of the Board of Managers which affect only the:

(a) Residential Units, do not materially and adversely affect the use and operation of the Non-Residential Units, and do not increase the obligations of the Non-Residential Unit Owners shall be made by the Residential Board Members, and the Residential Board Members may designate a committee comprised of Residential Unit Owners to make such determinations;

(b) Non-Residential Unit, do not materially and adversely affect the use and operation of Residential Units, and do not increase the obligations of the Residential Unit Owners shall be made by the Non-Residential Board Members.

Any dispute as to whether or not a determination materially and adversely affects any Units or Unit Owners shall be settled by arbitration in accordance with the provisions of these By-Laws. No dispute with respect to whether a determination materially and adversely affects a Unit shall be deemed to exist unless the objecting party specifies the grounds for its objection in writing to the Board of Managers within ten (10) business days of receipt by it of notice of such determination.

2.6. Powers of the Board of Managers. Subject to the terms of the Declaration and these By-Laws, the Board of Managers shall have the powers necessary for or incidental to the administration of the affairs of the Condominium (except such powers and duties which by law, the Declaration or these By-Laws may not be delegated to the Board of Managers by the Unit Owners). These powers shall specifically include, but are not limited to, the following:

(a) To determine and levy monthly assessments ("Common Charges") to cover the cost of

common expenses, payable in advance, and to allocate such Common Charges which may not necessarily be in accordance with each Unit's Common Interest, so long as it is in a way fairly attributable to all or a portion of the Units, based upon estimated usage of particular services, or based upon special or exclusive use or availability or exclusive control of particular Common Elements by particular Unit Owners;

(b) To collect, use and expend the Common Charges and assessments collected, to maintain, care for and preserve the Common Elements, and the Residential Common Elements. In no event shall Common Charges, Special Assessments or other funds received by the Board of Managers in connection with repairs of the Common Elements or Residential Common Elements be utilized to defray any expenses other than those related to the maintenance, repair and preservation of the Common Elements or Residential Common Elements respectively;

(c) To make repairs, restore or alter any Units or the Common Elements after damage or destruction by fire or other casualty or as a result of condemnation or eminent domain proceedings;

(d) To exercise the easements and access rights granted to the Board of Managers in the Declaration when necessary and with as little inconvenience to the Unit Owner as possible in connection with the maintenance, care and preservation of the property, including emergency repairs at all times whether or not the Unit Owner is present, provided that such utility or other easements shall not, to the extent commercially reasonable, interfere with the permitted use of Units;

(e) To open and maintain bank accounts on behalf of the Condominium and to designate the signatories to such bank accounts;

(f) To insure and keep insured the Common Elements and Units in accordance with these By-Laws;

(g) To collect delinquent Common Charges and/or assessments by suit or otherwise, to abate nuisances and to enjoin or seek damages from the Unit Owners of the property for violations of the Rules and Regulations herein referred to;

(h) To purchase any Unit at a foreclosure sale on behalf of all Unit Owners;

(i) To employ and terminate the employment of employees and independent contractors and to purchase supplies and equipment, to enter into contracts, and generally to have the powers of manager in connection with the matters hereinabove set forth;

(j) To bring and defend actions by or against more than one Unit Owner and pertinent to the operation of the Condominium. The Board of Managers may, in its discretion, fund the cost of any such litigation out of the Common Charge and/or assessments. The Board of Managers shall also have the right to engage in any litigation it deems necessary to carry out the provisions of the Declaration of Condominium and these By-Laws, and may fund

the cost of any such litigation out of the Common Charge and/or assessments. Non-Residential Unit Owners shall not be responsible to fund, through the payment of Common Charges or otherwise, disputes among the Residential Unit Owners, or the Board of Managers and one or more Residential Unit Owners. Without limiting the foregoing, the Board of Managers may engage in litigation pertaining to the enforcement of the Sponsor's obligations, as such obligations are set forth in the Declaration of Condominium and these By-Laws, and to the maintenance and operation of the Common Elements;

(k) To acquire Units in foreclosure or as a result of abandonment and to take any and all steps necessary to repair or renovate any Unit so acquired and to vote as Unit Owner, offer such Unit for sale or lease or take any other steps regarding such Unit as shall be deemed proper by the Board of Managers;

(l) To grant utility or other easements as may, at any time, be required for the benefit of the Condominium and Unit Owners without the necessity of the consent thereto, or joinder therein, by the Unit Owners;

(m) To borrow money on behalf of the Condominium when required in connection with the operation, care, upkeep and maintenance of the Common Elements, provided, however, that (i) the consent of at least one-hundred (100%) percent in number of all Unit Owners, obtained at a meeting duly called and held for such purpose in accordance with the provisions of these By-Laws, shall be required for the borrowing of any sum in excess of Five Thousand ($5,000.00) Dollars; (ii) no lien to secure repayment of any sum borrowed may be created on any Unit or its appurtenant interest in the Common Elements without the written consent of the Owner of said Unit; and (iii) such borrowing shall not modify the Budget Allocation or increase the obligations of a Non-Residential Unit Owner;

(n) To act as an agent of each Unit Owner who has given their written authorization to complain or apply to the local and county Real Estate Tax Assessment Agency Board of Review by filing a single complaint on behalf of all such Unit Owners pursuant to the applicable sections of the Real Property Tax Law. The Board of Managers may retain legal counsel on behalf of all Unit Owners for which it is acting as agent and charge all such Unit Owners a pro rata share of expenses, disbursements and legal fees for which charges the Board of Managers shall have a lien pursuant to these By-Laws;

(o) To sign any application or other document required to be filed with any governmental authority having or asserting jurisdiction in connection with any such structural addition, alteration or improvement made by Sponsor or Successor Sponsor to any Unit, provided, however, that neither the Board of Managers nor the Unit Owners shall be subjected to any expense or liability by virtue of the signing of the application or such other document. A copy of any such application or other document will be furnished to the Board of Managers;

(p) To collect funds from Unit Owners and accumulate reserves for capital replacements to the Units (the "Reserve Fund"). The Reserve Fund, if any, shall be used for the periodic maintenance, repair and replacement of the Common Elements. Non-Residential Unit Owners shall be obligated to contribute to the Reserve Fund, however, such contributions

must go towards Common Elements that serve the entire Building and not Residential Common Elements;

(q) To collect monthly escrows from Unit Owners with their Common Charges for the payment of real estate taxes attributable to individual Units based upon the estimated tax bill for the entire Property and the then current tax rate until all of the Units are separately assessed, and deposit the same in a tax escrow account established by Declarant pursuant to an offering plan filed with the New York State Department of Law; and

(r) To establish, enforce, amend and otherwise modify Rules and Regulations relating to the operation of the Condominium from time to time, and such Rules and Regulations, and any amendments thereto, shall be binding upon the Unit Owners thirty (30) days after the date the Board of Managers has approved them in writing and delivered a copy of the same to each Unit Owner. Such Rules and Regulations, and any amendments thereto, shall be applied uniformly to all Unit Owners, shall not be discriminatory, and shall not reduce the rights granted to Non-Residential Unit Owners in the Declaration or these By-Laws.

2.7. Resignation and Removal of Board Members.

2.7.1 Any Board Member may resign at any time by written notice delivered or sent by certified mail, return receipt requested to the Board of Managers. Such resignation shall take effect at the time specified therein and, unless specifically requested, acceptance of such resignation shall not be necessary to make it effective.

2.7.2 At any regular or special meeting of Unit Owners at which a quorum is established, (i) any Board Member appointed or elected by the Residential Unit Owners or Declarant may be removed for "Cause" (as hereinafter defined) by the Non-Residential Unit Owner and (ii) any Board Member appointed by the Non-Residential Unit Owner may be removed for Cause by the Residential Unit Owners. Any Board Member whose removal for Cause has been proposed shall be given an opportunity to be heard at the meeting. As used herein, "Cause" shall mean (i) conviction of a felony, (ii) conviction of any lesser crime or offense involving the property of the Condominium, or (iii) willful misconduct or gross negligence in the performance of his or her duties as a member of the Board of Managers. In the event of such removal, only the Non-Residential Unit Owner shall have the right to appoint a Non-Residential Board Member so removed, only the Residential Unit Owners may replace an elected Residential Board Member so removed, and only Declarant may replace a Declarant appointed Residential Board Member so removed.

2.7.3 The Commercial Unit Owner and Declarant shall have the right to remove their appointed Board Member at any time with or without Cause. An elected Residential Board Member may be removed and replaced by a vote of the Residential Unit Owners, pursuant to the terms of these By-Laws, at any regular or special meeting.

2.7.4 Vacancies. Any vacancy on the Board of Managers for whatever reason shall be filled by the Unit Owner(s) entitled to elect or designate such Board Member, within twenty (20)

days after the occurrence of any such vacancy. Any person so appointed or elected shall be a member of the Board of Managers for the remainder of the prior Board Member's term or until their successor shall be elected or appointed.

2.8. Board Meetings. Regular meetings of the Board of Managers shall be held at least four (4) times annually. Board of Managers members may appear at meetings by telephone or other electronic transmission provided all members may hear and be heard by all other members in attendance.

2.9. Quorum. A quorum of the Board of Managers shall consist of at least one (1) Non-Residential Board Member and at least two (2) Residential Board Members. In the event a quorum is not reached at a Board meeting, the Board Members present shall adjourn the meeting in accordance with their rules and send a notice for an adjourned meeting to be held within fifteen (15) business days of the adjourned meeting. If at the adjourned meeting there is no quorum, the Board Members present at the meeting shall adjourn the meeting in accordance with their rules and again send a notice for a second adjourned meeting to be held within fifteen (15) business days of the adjourned meeting. Notwithstanding the foregoing, a quorum of three (3) Residential Board members shall be sufficient for a Board of Managers meeting provided (a) the topics to be addressed at such meeting relates solely to the Residential Units; and (b) the Non-Residential Board Members have been notified of the date, time, location and topics to be addressed at such meeting; a quorum of two (2) Non-Residential Board Members shall be sufficient for a Board of Managers meeting provided (a) the topics to be addressed at such meeting relates solely to the Non-Residential Units; and (b) the Residential Board Members have been notified of the date, time, location and topics to be addressed at such meeting.

2.10. Vote Required to Transact Business. When a quorum is present at any meeting, all decisions affecting the Common Elements, both Residential Units and Non-Residential Units, or the entire Property shall require the vote of a majority of Board Members present; provided however, the Board of Managers shall not make any decisions or conduct any transactions that are discriminatory and adversely affect the Non-Residential Unit or Non-Residential Unit Owner. If a majority cannot be reached by the Board Members present, the vote shall be adjourned for the next meeting at which a quorum is present; if a majority cannot be reached at that meeting, the issue shall be presented to Unit Owners to vote at a special meeting or annual meeting. When a quorum is present at any meeting, all decisions and actions affecting only: (i) the Residential Units, the Residential Unit Owners, and/or the Residential Common Elements shall require the vote of a majority of the Residential Board Members; or (ii) the Non-Residential Unit, the Non-Residential Unit Owner, and/or the Non-Residential Common Elements shall require the vote of the Non-Residential Board Member.

2.11. Compensation. Managers and officers shall receive no compensation from the Condominium for their services.

2.12. Fidelity Bonds. The Board of Managers shall obtain and maintain to the extent obtainable Fidelity Insurance covering all employees of the Condominium who handle Condominium funds in an amount not less than $5,000.00 for each loss. The premiums on such bonds shall be a Common Expense.

2.13. Annual Statement. The Board of Managers shall furnish to all Unit Owners and the Department of Law (if and when required by law), and shall present annually (at the annual meeting) and when called for by a vote of the Unit Owners at any special meeting of the Unit Owners, a full and clear statement of the business conditions and affairs of the Condominium, including a balance sheet and profit and loss statement verified by an independent public accountant and a statement regarding any taxable income attributable to the Unit Owners and a notice of the holding of the annual Unit Owners' meeting.

2.14. Liability of Board Members. Any contract, agreement or commitment made by the Board of Managers shall state that it is made by such Board Member as agent for the Board of Managers, and that no member of the Board of Managers, or individual Unit Owners shall be liable under such contract, agreement or commitment. The Board of Managers shall have no liability to the Unit Owners in the management of the Condominium except for gross negligence or willful misconduct or acts made in bad faith, and the Unit Owner shall jointly and severally indemnify all members of the Board of Managers against any liabilities or claims arising from acts taken by a Board of Managers member in accordance with their duties as such member, except as set forth herein.

2.15. Managing Agent. At its discretion, the Board of Managers may employ for the Condominium a managing agent under a term contract or otherwise at compensation established by the Board of Managers, to perform such duties and services as the Board of Managers shall authorize, including, but not limited to, all of the delegable duties of the Board of Managers listed in this Article.

ARTICLE III UNIT OWNERS

3.1. Annual Meetings. The first annual meeting of the Unit Owners shall be held within three hundred-sixty (360) days from the closing of title to the first Unit, or as soon thereafter as is practicable. At such meeting, the Non-Residential Unit Owner(s) shall designate the Non-Residential Board Member(s), and the Declarant shall designate the Residential Board Members. Thereafter, annual meetings of the Unit Owners shall be held on the anniversary of such date each succeeding year, and the Non-Residential Board Members, and after the Control Period the Residential Board Members, shall be appointed and/or elected at such annual meetings pursuant to these By-Laws.

3.2. Special Meetings. The President shall call a special meeting of the Unit Owners as directed by a majority of the Board of Managers.

3.3. Voting. Except as otherwise set forth herein or in the Declaration, at all meetings of Unit Owners, each Unit Owner (or such Unit Owner's proxy) entitled to vote thereat (including Sponsor with respect to Units owned by Sponsor or Successor Sponsor) shall be entitled to cast one vote for each .0001% of Common Interest attributable to their Unit(s). If only the vote of the Residential Unit Owners is required, the required percentage of votes shall mean a required percentage in terms of total Residential Common Interests, and not the Common Interest.

3.4. Quorum. Except when the vote of more than a majority of Unit Owners is required, a quorum of all the Unit Owners shall consist of at least the Non-Residential Unit Owner, and Residential Unit Owners representing fifty-one percent (51%) of the total Residential Common Interest, in person or by proxy. When a vote of more than fifty-one percent (51%) of Unit Owners is required, a quorum shall consist of the Non-Residential Unit Owner, and sufficient Residential Unit Owners representing the minimum percentage of votes required pursuant to the Declaration and By-Laws. In the event a quorum is not reached at the annual meeting or a special meeting, the Unit Owner present shall adjourn the meeting in and send a notice for an adjourned meeting to be held within fifteen (15) business days of the original meeting. If at the adjourned meeting there is no quorum, the Unit Owner present at the meeting shall adjourn the meeting and again send a notice for an adjourned meeting to be held within fifteen (15) business days of the adjourned meeting.

3.4.1 With respect to any meeting of solely the Residential Unit Owners, a quorum shall consist of Residential Unit Owners representing fifty-one percent (51%) of the Residential Common Interests.

3.4.2 With respect to any meeting of solely the Non-Residential Unit Owners, a quorum shall consist of just the Non-Residential Unit Owners.

3.5. Vote Required to Transact Business. When a quorum is present at any meeting, all decisions affecting the Common Elements, both Residential Units and Non-Residential Units, or the entire Property shall require the vote of a majority of Unit Owners present; provided however, the Unit Owners shall not make any decisions or conduct any transactions that are discriminatory and adversely affect the Non-Residential Unit or Non-Residential Unit Owner. When a quorum is present at any meeting, all decisions and actions affecting only: (i) the Residential Units, the Residential Unit Owners, and/or the Residential Common Elements shall require the vote of a Residential Unit Owners representing fifty-one percent (51%) of the total Residential Common Interest present; or (ii) the Non-Residential Unit, the Non-Residential Unit Owner, and/or the Non-Residential Common Elements shall require the vote of the Non-Residential Unit Owner.

3.6. Proxies. All proxies shall be in writing, and shall be filed with the Secretary prior to the meeting at which the same are to be used. A notation of such proxies shall be made in the minutes of the meeting.

3.7. Right to Vote. At any meeting of the Unit Owners, every Unit Owner having the right to vote shall be entitled to vote in person or by proxy. Except as otherwise stated in the Declaration or these By-Laws, no Unit Owner may vote at any meeting if the Unit Owner is not current in payment of their Common Charges.

3.8. Waiver and Consent. Whenever the vote of Unit Owners at a meeting is required or permitted by any provision of the Declaration, the By-Laws or Article 9-B of the Real Property Law, such vote and meeting may be dispensed with if all Unit Owners who would have been entitled to vote at such meeting shall consent in writing to any action being taken.

3.9. Notice of Meetings. The Secretary shall deliver written notice of each annual or special

meeting to each Unit Owner of record at least ten (10) but no more than twenty (20) days prior to such meeting stating the purpose thereof as well as the time and place where it is to be held. The delivery of a notice in the manner provided in these By-Laws shall be considered notice served.

3.10. Order of Business. The order of business shall be as follows:

(a) Roll call;
(b) Proof of notice of meeting or waiver of notice;
(c) Reading of minutes of preceding meeting;
(d) Report of officers;
(e) Election of Managers (in the event there is an election);
(f) Unfinished business; and
(g) New business.

ARTICLE IV OFFICERS

4.1. Elective Officers. The officers of the Condominium shall be elected by the Board of Managers and shall be a President, Vice President, Secretary, and Treasurer. Two or more offices may be held by the same person so long as there are at least three (3) officers; the President and Vice President cannot be held by the same person.

4.2. Election. The Board of Managers at its first meeting after each annual Unit Owners' meeting shall elect a President, Vice President, Secretary, and Treasurer. Only the President must be a member of the Board of Managers.

4.3. Appointive Officers. The Board of Managers may appoint such other officers and agents as it shall deem necessary that shall hold their offices for such terms and shall exercise such powers and perform such duties as shall be determined from time to time by the Board of Managers.

4.4. Term. The officers shall hold office until their successors are elected and qualify in their stead. Any officer elected or appointed by the Board of Managers may be removed with or without cause, at any time, by the affirmative vote of a majority of the whole Board of Managers. If the office of any officer becomes vacant for any reason, the vacancy shall be filled by the Board of Managers.

4.5. The President. The President shall be the chief executive officer of the Condominium; shall preside at all meetings of the Unit Owners and Managers, shall be an ex-officio member of all standing committees, shall have general and active management of the business of the Condominium, shall see that all orders and resolutions of the Board of Managers are carried into effect and shall have such other powers and duties as are usually vested in the office of President of a stock corporation organized under the Business Corporation Law of the State of New York.

4.6. The Vice President. The Vice President shall take the place of the President and perform their duties whenever the President shall be absent or unable to act and shall have such other powers and duties as are usually vested in the office of Vice President of a stock corporation organized under the Business Corporation Law of the State of New York.

4.7. The Secretary. The Secretary shall attend all sessions of the Board of Managers and all Unit Owners' meetings and record all votes and the minutes of all proceedings in a book to be kept for that purpose and shall perform like duties for the standing committees when required. The Secretary shall give, or cause to be given, notices of all Unit Owners' meetings and special meetings of the Board of Managers, and shall perform such other duties as may be prescribed by the Board of Managers or by the President under whose supervision he shall be.

4.8. The Treasurer. The Treasurer shall have the custody of the Condominium funds and securities and shall keep full and accurate chronological accounts of receipts and disbursements in books belonging to the Condominium including the vouchers for such disbursements, and shall deposit all moneys and other valuable effects in the name and to the credit of the Condominium in such depositories as may be designated by the Board of Managers. The Treasurer shall disburse the funds of the Condominium as he may be ordered by the Board of Managers, making proper vouchers for such disbursements and shall render to the President and the Board of Managers, at the regular meeting of the Board or whenever they may require it, an account of all their transactions as Treasurer and of the financial condition of the Condominium. The Treasurer shall keep detailed financial records and books of account of the Condominium, including a separate account for each Unit which, among other things, shall contain the amount of each assessment of Common Charges against such Unit, the date when due, the amounts paid thereon and the balance remaining unpaid.

4.9. Agreements. All agreements, contracts, deeds, leases, checks and other instruments of the Condominium shall be executed on behalf of the Condominium by the President or such other person as may be designated by the Board of Managers. However, the Board of Managers may, by resolution, determine that any instruments in excess of a specified amount be countersigned by the President and a second officer.

ARTICLE V INDEMNIFICATION

The Condominium shall indemnify any person made, or threatened to be made, a party to an action by or in the right of the Condominium to procure a judgment in its favor by reason of the fact that they, their testator or intestate, is or was a member of the Board or officer of the Condominium, or is or was serving at the request of the Condominium as a member of the Board or officer against amounts paid in settlement and reasonable expenses, including attorneys' fees, actually and necessarily incurred by him in connection with the defense or settlement of such action, or in connection with an appeal therein, if such member of the Board or officer acted, in good faith, for a purpose which he reasonably believed to be in the best interest of the Condominium, except that no indemnification shall be made to or on behalf of any member of the Board or officer if a judgment or other final adjudication adverse to the member of the Board or officer establishes that their acts were committed in bad faith or were the result of active and deliberate dishonesty and were material to the cause of action so adjudicated, or that he personally gained in fact a financial profit or other advantage to which he was not legally entitled.

ARTICLE VI REPAIRS AND MAINTENANCE

6.1. Common Elements.

6.1.1 The Board of Managers shall be responsible for all maintenance, repairs and replacement of the Common Elements, except as otherwise set forth in these By-Laws or the Declaration. The Board of Managers and its agents, employees and contractors shall have a right of access to any Unit and to all portions of the Common Elements for the purpose of carrying out any of its obligations under these By-Laws or the Declaration.

6.1.2 The Board of Managers shall repair and replace any pipes, wires, conduits and public utility lines part of the Common Elements, and shall make all necessary structural repairs to any such Common Element, and the cost thereof shall be a Common Expense allocated among Unit Owners as set forth in the Budget Allocation, except where such repair or replacement is necessitated by the negligence, misuse or neglect of a Unit Owner, in which event such cost and expense shall be assessed to and paid for by such Unit Owner, together with an administrative expense equal to 20% of all costs in connection therewith.

6.2. Residential Common Elements. The Board of Managers shall be responsible for the repair and maintenance of the Residential Common Elements. However, the costs of operating, repairing and maintaining the Residential Common Elements, and the Limited Common Elements to the extent that it is the Board of Managers' obligation to effect such repairs, shall be a Residential Common Expense to be apportioned among the Residential Unit Owners according to their Residential Common Interests.

6.3. Repairs and Maintenance of Units.

6.3.1 Except as otherwise specifically provided in the Declaration or in these By-Laws, all maintenance, repairs, and replacement in the Units, including plumbing stoppages, window cleaning, painting, decorating, fixtures, pipes, wires, circuit breakers, and conduits located in and exclusively servicing the Unit, and a Limited Common Element appurtenant to its Unit shall be made by the respective Unit Owners at their own cost and expense. The Unit Owners shall also be responsible for all maintenance, repairs and replacement of any and all HVAC equipment exclusively servicing their Unit.

6.3.2 In the event that a Unit Owner fails to make any maintenance or repair necessary to protect any of the Common Elements, Residential Common Elements, Non-Residential Common Elements, or Limited Common Element appurtenant to its Unit or its own Unit, or, in the event of service of a Building Department violation notice covering the Unit upon the Board of Managers, the Board of Managers shall have the right to make such maintenance or repair (after the failure of the Unit Owner to do so after ten (10) days' written notice or written or oral notice of a shorter duration in the event of an emergency situation) and to charge the Unit Owner for the cost of all such repairs and/or maintenance, together with an administrative expense equal to 20% of all costs in connection therewith. In the event that the Board of Managers charges a Unit Owner for repairs or maintenance to their Unit or for repairs to any Common Elements, and the Unit Owner fails to make prompt payment, such charges shall be considered as additional Common Charges due from said Unit Owner, and the Board of Managers shall be entitled to bring suit thereon. In the event the Board of Managers brings such a suit, the Unit Owner shall be liable for

the reasonable attorneys' fees and cost of such suit or proceeding together with the interest on all sums due.

6.3.3 Windows to a Unit, including window glass and window frames, and entrance doors to a Unit or Limited Common Element shall be repaired and replaced by the Unit Owner at the Unit Owner's cost and expense unless otherwise decided by the Board of Managers or by vote of Unit Owners to clean, repair, or replace the windows and/or doors of multiple Units, in which case such cost and expense shall be a Common Expense.

6.4. Repairs to Limited Common Elements. Each Unit Owner of a Unit to which a Limited Common Element is appurtenant shall be responsible for the cost and performance of all painting, decorating and non-structural ordinary maintenance, repairs, cleaning and replacements to such Limited Common Element, including pipes, wires, and conduits exclusively servicing the Unit. However, any structural or non-ordinary repairs or replacements to a Limited Common Element shall be made by the Board of Managers, and the cost and expense thereof shall be charged to all Unit Owners as a Common Expense unless the need for such repair or replacement was caused by the wrongful or negligent act or omission of a Unit Owner or their tenants, guests, or invitees whereby the cost shall be charged to such Unit Owner. The Board of Managers shall have the right of access to, in, and through these areas for the purpose of doing building maintenance inspections. No structures of any kind may be erected on Limited Common Elements without the express written permission of the Board of Managers, except for temporary structures. Notwithstanding anything herein to the contrary, a Unit Owner who wishes to paint, decorate or make any other changes to a Limited Common Element appurtenant to their Unit, and which change deviates from the Limited Common Element as it was originally delivered by Declarant, must first obtain express written permission from the Board of Managers; for as long as Declarant owns at least one Unit, a Unit Owner must also obtain express written permission from the Declarant.

6.5 Standard of Repairs. All repairs, painting or maintenance, whether made by the Unit Owner or by the Board of Managers to the doors, windows or the exterior surface of the Building or to any visible portion of the Common Elements, shall be carried out in such a manner so as to conform to the materials, style, color, dignity and character of the Building, as determined by the Board of Managers in its sole discretion.

ARTICLE VII CHANGES AND ALTERATIONS

7.1. The public areas of the Condominium and those residential areas exposed to public view or other Unit Owners shall be kept in good appearance, in conformity with the dignity and character of the Building, as determined by the Board of Managers in its sole discretion, by (i) the Board of Managers, with respect to such parts of the Building required to be maintained by the Board of Managers, and (ii) each Unit Owner with respect to interior surfaces of windows and shades, venetian or other blinds, drapes, curtains, or other window decorations in or appurtenant to such Unit Owner's Unit. To promote a consistent appearance of the Building from the outside, no Residential Unit Owner shall be permitted to enclose, erect a greenhouse, and/or alter a terrace or balcony appurtenant to a Unit in such a way that will alter the conformity of the Building, without the prior written approval of the Board of Managers. The Board of Managers may issue regulations

concerning the size, type, and color of window treatments to be installed on the windows of Units in other to provide a visually harmonious appearance. The Board of Managers may limit the types of personal items, furnishings, and plantings that may be placed on terraces or balconies appurtenant to a Unit.

7.2. Changes and Alterations to Units.

7.2.1 The Declarant may make Alterations to Units owned by Declarant without the prior approval and consent of the Board of Managers in any manner that does not materially and adversely affect any structural elements of the Building or any Building systems that serve other Units or the Common Elements.

7.2.2 Except as otherwise provided in the Declaration, alterations to the Units other than by Declarant are subject to the approval of the Board of Managers; such consent will not be unreasonably withheld, provided that the addition, alteration, repair or improvement may be made while retaining the structural integrity of the Building. Furthermore, Unit Owners (other than Declarant) may not apply for any permits for construction work in a Unit until after the final Certificate of Occupancy has been issued for the Building by the Department of Buildings. The Unit Owner or tenant seeking to make such alterations shall provide the Board of Managers, and the Declarant if applicable, with copies of all plans and drawings related to the proposed alteration, and any information reasonably requested by the Board of Managers and the Declarant. Upon receipt of all requested information, the Board of Managers, and the Declarant if applicable, shall have ten (10) business days to issue a determination of whether such plans would have any material or adverse effect. The Board of Managers' failure to respond within such time shall be deemed a determination that the proposed alteration will not have any material or adverse effect. No application shall be filed with the New York City Buildings Department or with any other governmental authority for a permit covering an addition, alteration or improvement to be made in a Unit unless approved in writing executed by the Board of Managers. Such execution shall not subject the Board of Managers or any of its members to any liability to any contractor, subcontractor, material man, architect or engineer, by reason of such addition, alteration or improvement or to any person having any claim for injury to person or damage to Property arising therefrom. If requested by the Board of Managers, a Unit Owner shall indemnify the Board of Managers for loss, damage or liability resulting in any way from execution of any such documents executed by the Board of Managers or any of its Members.

7.3. Changes to the Common Elements. Alterations to the Common Elements, and/or Residential Common Elements must be approved by the Board of Managers.

7.4. Scaffolding and Other Temporary Structures. In the event the Board of Managers, or the Declarant erects scaffolding, "bridges" or other temporary structures to perform renovations, improvements or other work to or at the Building or any part thereof, the Board of Managers will use, or cause the Unit Owner performing the work to use commercially reasonable efforts to minimize interference with the use of the Non-Residential Units, including, but not limited to access and signage, and to minimize the period of time the same is erected. In the event exterior signage is obscured thereby, the party installing the temporary structures, subject to the requirements of the Declaration, the By-Laws and all applicable law, shall install or pay for the

installation of temporary signage in place of the obscured signage on behalf of the Non-Residential Unit Owners or its tenant upon such temporary structures located directly in front of the applicable Non-Residential Unit in the maximum size that such structure can reasonably accommodate. No signage other than the Non-Residential Unit Owners' or its tenants' signage shall be erected or placed upon such temporary structures in the space which is located directly in front of such Unit.

7.5. Veto Rights. Unit Owners, and/or the Declarant, if the Declarant still owns any Units in the Condominium, shall have the right to veto any proposed alteration that would have a material and adverse impact on such Unit Owner's Unit.

7.6. Minimum Requirements. All changes and alterations to the Building, the Common Elements and the Units must be performed in accordance with applicable law by licensed and insured contractors.

7.7. Changes to Units or Common Element. With respect to any repairs, maintenance, alterations, or other work performed by a Unit Owner that affects a Common Element or Unit not owned by said Unit Owner, said Unit Owner shall be responsible to restore the affected Common Element or Unit to as near as commercially reasonable and practicable to the condition and finish existing immediately prior to said work.

ARTICLE VIII NOTICES

8.1. Definition. All notices required or desired to be given hereunder to the Board of Managers, shall be personally delivered or sent by registered or certified mail or overnight mail to the office of the Board or to such other address as the Board of Managers may designate from time to time, by notice in writing to all Unit Owners and to all Registered Mortgagees, if required, as the case may be, and if there is a managing agent of the Board of Managers, a duplicate shall be sent in like manner to such managing agent. All notices to any Unit Owner shall, except as otherwise provided herein, be personally delivered or sent by registered or certified mail or overnight mail to the Property address of such Unit or to such other address as may have been designated by such Unit Owner from time to time, in writing, to the Board of Managers. All notices by Registered Mortgagees shall be personally delivered or sent by mail to their respective addresses, as designated by them from time to time, in writing to the Board of Managers. All notices shall be deemed to have been given when personally delivered, sent by overnight mail or mailed in a postage-prepaid sealed wrapper, except notices of change of address which shall be deemed to have been given when received.

8.2. Waiver of Service of Notice. Whenever any notice is required to be given under the provisions of the Declaration, or of these By-Laws, a waiver thereof, in writing, signed by the person or persons entitled to such notice, whether before or after the time stated therein, shall be deemed the equivalent thereof.

8.3. Notice to Registered Mortgagee or Registered Guarantor

The Board of Managers shall provide timely written notice to a Registered Mortgagee or Registered Guarantor for the following:

A. Notice of unpaid Common Charges and default notice of any default or violation by the Unit Owner in the payment of Common Charges or the observance or performance of any of the provisions of the Condominium Documents as to which the Board of Managers has actual knowledge then exists which remains uncured for a period of sixty (60) days; and when giving notice of any default or violation to such mortgagor Unit Owner, the Board of Managers shall also send a copy of such notice to such Owner's Registered Mortgagee and/or Registered Guarantor.

B. Notice of any condemnation or casualty loss which affects a material portion of the Property or a Unit on which there is a Registered Mortgage held, insured or guaranteed by such Registered Mortgagee or Registered Guarantor, as applicable.

C. Notice of any lapse, cancellation or material modification of any insurance policy or fidelity bond maintained by the Board of Managers.

D. Notice of any proposed action under the Declaration or these By-Laws which would: (i) change the boundaries of any Unit; (ii) change the interests in the common elements pertaining to a Unit; (iii) change the number of votes pertaining to a Unit; (iv) change the use restrictions of any Unit; (iv) any proposed termination of the condominium.

E. In no event, however, shall the Board (including its members, officers, agents, attorneys and employees) and Unit Owners be liable for any Claims or Liabilities and Expenses for any failure, through oversight or negligence, in giving a Registered Mortgagee or Registered Guarantor of any notice required under subsections (A) through (D) above. Nonetheless: (a) the Board of Managers shall give such missed notice with reasonable promptness after discovering such failure; and (b) if the Board of Managers shall foreclose its lien on such mortgagor's Unit hereof by reason of the mortgagor-Unit Owner's default or violation, the Board of Managers shall pay to such Registered Mortgagee the extent of any undistributed net proceeds of said foreclosure sale of such Unit then held by the Board (subject to an in accordance with the lien priority), but not more than the sum as shall be due and owing to such Registered Mortgagee.

ARTICLE IX FINANCES

9.1. Checks. All checks or demands for money and notes of the Condominium shall be signed by the President and such other person or persons as the Board of Managers, may from time to time, designate.

9.2. Common Charges & Assessments.

9.2.1 From time to time, but not less frequently than once a year, the Board of Managers shall: (i) prepare and adopt a budget for the Condominium, subject, in all respects, to the strictures set forth in these By-Laws, except that the Board of Managers shall provide a copy of any proposed budget to Unit Owners sixty (60) days prior to adoption of the same; (ii) determine the aggregate amount of Common Charges necessary to be charged to the Unit Owners in order to meet the

Common Expenses; and (iii) allocate and assess such Common Charges amongst the Unit Owners in accordance with the Budget Allocation, which allocations are based on the proportion of expenses and charges fairly attributable to Units, based upon estimated usage of particular services, or based upon special or exclusive use or availability or exclusive control of particular Common Elements by particular Unit Owners as authorized by 339-m of the Condominium Act. The Board of Managers shall advise all Unit Owners promptly thereafter in writing of the amount of Common Charges payable by each of them, not later than ten (10) days prior to the date upon which the first installment of newly determined Common Charges is due, shall furnish copies of the budget (in a reasonably itemized form) upon which such Common Charges are based to all Unit Owners and to their respective Permitted Mortgagees whenever requested in writing by such Permitted Mortgagees. The Board of Managers may, at its sole discretion, from time to time increase or decrease the amount of Common Charges allocated to the Units and payable by the Unit Owners and may modify its prior determination of the Common Expenses for any fiscal year so as to increase or decrease the amount of Common Charges payable for such fiscal year or portion thereof; however, no such revised determination of Common Expenses shall have a retroactive effect on the amount of Common Charges payable by Unit Owners for any period prior to the date of such new determination.

9.2.2 In addition to the foregoing duty to determine the amount of and assess Common Charges, the Board of Managers shall have the right, subject to the strictures set forth in these By-Laws, to levy special assessments ("Special Assessments") to meet the Common Expenses. The Board of Managers shall give each Unit Owner not less than ten (10) days' written notice prior to the date upon which the Board of Managers shall meet to discuss levying Special Assessments, with reasonable detail of the nature and purpose of the Special Assessment. As applicable, Special Assessments shall be allocated and assessed amongst the Unit Owners in accordance with the allocations set forth in Schedule D to the Declaration. In the event the cost or expense resulting in the Special Assessment does not fall within one of the categories set forth in Schedule D, then the Special Assessment shall be based on the proportion of expenses and charges fairly attributable to Units, based upon estimated usage of particular services, or based upon special or exclusive use or availability or exclusive control of particular Common Elements by particular Unit Owners. Special Assessments levied against the Residential Unit Owners relative to (i) the Common Elements, after the aforementioned allocation between the Residential Units and Non-Residential Units is affected, and (ii) the Residential Common Elements and/or the Limited Residential Common Elements shall be levied against all Residential Unit Owners in proportion to their respective Residential Common Interests. Special Assessments may be payable either in one lump sum or in installments, as the Board of Managers shall determine, provided, however, that the Board of Managers shall give each Unit Owner not less than fifteen (15) days' written notice prior to the date upon which such Special Assessment, or the first installment thereof, shall be due and payable, which notice shall set forth, in reasonable detail, the nature and purpose thereof. The Board of Managers shall have all rights and remedies for the collection of Special Assessments as are provided herein for the collection of Common Charges.

9.3. Failure to Pay Assessments.

9.3.1 Unit Owners shall pay promptly when Common Charges and Special Assessments are assessed against their Unit. Any Unit Owner who fails to pay Common Charges shall be liable

for any expenses incurred by the Board of Managers in collecting said monthly Common Charge assessment, including interest at the highest legal rate and reasonable attorneys' fees.

9.3.2 In the event of a default in the payment of any monthly Common Charge assessment by any Unit Owner, the Board of Managers, at its sole option, may declare the Common Charge assessment on said Unit Owner's Unit for the balance of the fiscal year immediately due and payable. Prior to making any such declaration following a default, the Board of Managers shall send notice to the delinquent Unit Owner and the Registered Mortgagee, if any, giving the Unit Owner a five (5) day grace period in which to make their payment. The Board of Managers may charge the delinquent Unit Owner a fee of the greater of (a) One Hundred Fifty ($150.00) Dollars or one (1%) percent of such amounts which remain unpaid for more than ten (10) days from their due date (although nothing herein shall be deemed to extend the period within which such amounts are to be paid), and (b) interest at the rate of two percent (2%) per month (but in no event in excess of the maximum rate permitted by applicable Law) on such unpaid amounts computed from the due date thereof to cover the additional burden to the Board occasioned by the lack of timely payment, in addition to interest at the highest legal rate on the Common Charge assessment from its due date to the date payment is actually received from the Unit Owner. Special assessments, should such be required, shall be levied and paid in the same manner as hereinabove provided for regular assessments.

9.3.3 The Board of Managers shall take action to collect any Common Charges due from any Unit Owner which remain unpaid ninety (90) days from its due date by way of foreclosure of the lien on such Unit in accordance with Section 339 of the Real Property Law, or otherwise. Under Section 339-aa of the Condominium Act, a lien for non-payment of Common Charges will be subordinate only to liens for real estate taxes and to sums unpaid on a first mortgage of record on the Unit. Any lien for unpaid Common Charges against a Unit shall be effective from and after the filing of a notice thereof in the office of the County Clerk in Kings County, and until all sums secured thereby, with the interest accrued thereon at the highest legal rate, shall have been fully paid or until six (6) years from the date of filing (unless foreclosure of such lien is started within such six-year period), whichever is earlier. The lien may be foreclosed by a suit brought in the name of the Board of Managers acting on behalf of the Unit Owners, similar to a foreclosure of a mortgage on real property, or an action may be brought by the Board of Managers to recover the unpaid Common Charges, without necessarily filing the lien

9.3.4 No Unit Owner shall be liable for any Common Charges that accrue against a Unit subsequent to a sale, transfer or other conveyance of the Unit in accordance with these By-Laws and the Declaration. A purchaser of a Unit (other than a mortgagee or a purchaser at a foreclosure sale) shall be liable for the payment of all Common Charges assessed against the Unit and unpaid at the time of the purchase.

9.3.5 If a Unit Owner rents any Unit to a rental tenant and then fails to make payments due for Common Charges, assessments or late fees for such Unit within sixty (60) days of the expiration of any grace period after they are due, upon notice in writing, all rent payments from the tenant shall attorn to the Board of Managers and shall be directly payable to the Board of Managers.

If the Common Charges, assessments or late fees due for any Unit have not been paid in full, within sixty (60) days after the expiration of any grace period of the earliest due date, the Board of Managers shall provide written notice to the tenant and the Unit Owner providing that, commencing immediately and until such time as all payments for Common Charges, assessments or late fees are made current, all rental payments due subsequent to the issuance of such notice are to be made payable to the Board of Managers at the address listed on the notice. At such time as payments for common charges, assessments and late fees from the Unit Owner are once again current, notice of such fact shall be given within three (3) business days to the rental tenant and Unit Owner. Thereafter all rental payments shall be made payable to the Unit Owner or a designated agent. A Unit Owner who disputes the Board of Managers' claim to rental payments pursuant to this section shall be entitled to present facts supporting such owner's position at the next scheduled meeting of the Board of Managers, which must be held within thirty (30) days from the date the Board of Managers receives notice that such Unit Owner seeks to dispute such claim. Nothing in this section shall limit any rights of Unit Owners or of the Board of Managers existing under any other law or agreement. Payment by a rental tenant to the Board of Managers made in connection with this section shall relieve that rental tenant from the obligation to pay such rent to the Unit Owner and shall be an absolute defense in any non-payment proceeding commenced by such Unit Owner against such tenant for such rent.

9.3.6. Any first mortgagee who obtains title to a Condominium Unit pursuant to the remedies in the mortgage or through foreclosure will not be liable for more than six (6) months of the Unit's unpaid common charges before acquisition of the title to the Unit by the mortgagee. The lender will be liable for any fees or costs related to the collection of the unpaid Common Charges.

9.4. Foreclosure of Liens for Unpaid Assessments. The Board of Managers shall have the power to purchase any Unit at a foreclosure sale resulting from any action brought by the Board of Managers to foreclose a lien on the Unit because of unpaid assessments. In the event of such purchase, the Board of Managers shall have the power to hold, lease, mortgage, sell, vote or otherwise deal with the Unit. A suit to recover a money judgment for unpaid assessments shall also be obtainable separately without waiving the lien on the Unit.

9.5. Statement of Assessments. Upon the written request of any Unit Owner or their mortgagee, the Board of Managers shall promptly furnish such Unit Owner or their mortgagee with a written statement of the unpaid assessments due from such Unit Owner.

9.6. Liability for Water, Sewage, Gas and Electricity**.** Each Unit Owner shall be responsible for paying for the costs of separately sub-metered utilities for their Unit. Commonly metered utilities will be paid by the Board of Managers as a Common Expense, and the costs allocated among the Unit Owners as Common Charges.

9.7. Operating Account. There shall be established and maintained a cash deposit account to be known as the "Operating Account" into which shall be deposited the operating portion of all monthly and special assessments as fixed and determined for all Units. Disbursements from said account shall be for the general needs of the operation including, but not limited to, wages, repairs, betterments, maintenance and other operating expenses of the Common Elements and for the purchase, lease, sale or other expenses resulting from the purchase or lease of Units.

9.8. Other Accounts. The Board of Managers shall maintain any other accounts it shall deem necessary to carry out its purposes.

ARTICLE X INSURANCE AND INSURANCE TRUSTEE

10.1. Insurance to be Carried by the Board of Managers. Not later than the date the first Unit is conveyed, the Board of Managers shall obtain, and maintain to the extent obtainable, all risk or fire insurance with extended coverage, loss of business, income/extra expense, boiler and machinery, insuring the Condominium, including all of the Units and the bathrooms and fixtures initially installed therein, together with all heating, air conditioning and other service machinery contained therein, covering the interest of the Condominium, the Board of Managers and all Unit Owners and their Registered Mortgagees, as its interest may appear, in an amount equal to at least one hundred percent (100%) of the replacement value of the Building exclusive of the land, foundation, excavation and other items normally excluded from coverage. Each of such policies shall contain New York standard mortgagee clause in favor of each mortgagee of a Unit which shall provide that the loss, if any thereunder, shall be payable to such mortgagee as its interest may appear, subject however, to the loss payment provisions in favor of the Board of Managers and the Insurance Trustee hereinafter set forth; and such other insurance as the Board of Managers may determine. The Board of Managers is hereby irrevocably appointed agent for each Unit Owner and for each owner of a mortgage or other lien upon a Unit and for each owner of any other interest in the Condominium property to adjust all claims arising under insurance policies purchased by the Board of Managers and to execute and deliver releases upon the payment of claims. All of such policies shall provide that adjustment of loss shall be made by the Board of Managers and all policies of physical damage insurance shall provide that the proceeds thereof, if $100,000 or less, shall be paid to the Board of Managers, and if in excess of $100,000 shall be paid to the Insurance Trustee. The Board of Managers is hereby appointed agent for each Unit Owner and for each Owner of a mortgage or other lien upon a Unit and for each owner of any interest in the Condominium property to adjust all claims arising under insurance policies purchased by the Board of Managers and to execute and deliver releases upon the payment of claims.

10.1.1 All policies of physical damage insurance shall contain waivers of subrogation and of any reduction of pro rate liability of the insurer as a result of any insurance carried by Unit Owners or of the invalidity arising from acts of the insured or any Unit Owners, and shall provide that such policies may not be cancelled or substantially modified without at least ten (10) days' prior written notice to all of the insureds, including all mortgagees of Units. Duplicate originals of all policies of physical damage insurance and all renewals thereof, together with proof of payment of premiums, shall be delivered to all mortgagees of Units at least ten (10) days prior to expiration of the then current policies.

10.1.2 The Board of Managers shall also be required to obtain and maintain, to the extent obtainable, general comprehensive liability insurance in such limits as the Board of Managers may from time to time determine, covering each member of the Board of Managers, managing agent, if any, and each Unit Owner. Such comprehensive general liability insurance shall also cover cross-liability claims of one insured against another and shall be in a single limit of not less than One Million Dollars ($1,000,000) covering all claims for bodily injury and for property damage arising out of one occurrence. Such comprehensive general liability insurance shall commence on

the closing of title to the first Unit. The Board of Managers shall also be required to carry workmen's compensation insurance should it be required by law.

10.1.3 Each Unit Owner shall be required to have in place as of the date they acquire title a policy insuring the improvements and betterments in its Unit, and naming the Condominium and the Board of Managers as the additional insured. In addition, the Non-Residential Unit Owner shall be required to carry commercial liability insurance effective as of the date they acquire title with liability coverage of not less than $1,000,000.00 for each incident and $2,000,000.00 in the aggregate. Residential Unit Owners shall be required to carry homeowner's liability insurance effective as of the date they acquire title in amounts acceptable to the Board of Managers. All Unit Owners must maintain current certificates of insurance with the Board of Managers, or the managing agent if any. All policies required pursuant to this subsection shall contain waivers of subrogation, and shall not affect or diminish for any reason any insurance procured by the Board of Managers.

10.2. The Insurance Trustee. The Insurance Trustee shall be a bank or trust company located in the State of New York designated by the Board of Managers. All fees and disbursements of the Insurance Trustee shall be paid by the Board of Managers and shall constitute a Common Expense of the Condominium. In the event the Insurance Trustee resigns or fails to qualify, the Board of Managers shall designate a new Insurance Trustee that shall be a bank or trust company located in the State of New York. Until such time that the mortgage lien held by the Declarant remains outstanding, the Declarant's Permitted Mortgagee shall act as Insurance Trustee.

10.3. Restoration or Reconstruction After Fire or Other Casualty.

10.3.1 In the event of damage to or destruction of the Building as a result of fire or other casualty (unless 75% or more of the Units are destroyed or substantially damaged and 75% or more of the Unit Owners, inclusive of the Non-Residential Unit Owner, do not duly and promptly resolve to proceed with repair or restoration), subject to the provisions of any mortgage covering the Premises, the Board of Managers or the Insurance Trustee shall arrange for the prompt repair and restoration of the Building (including all kitchen or bathroom fixtures initially installed therein by the Sponsor, any heating, air conditioning or other service machinery which is covered by insurance, but not including any wall, ceiling or door decorations or coverings or other furniture, furnishings, fixtures or equipment installed by Unit Owners in the Units) and the Board of Managers, or the Insurance Trustee, as the case may be, shall disburse the proceeds of all insurance policies to the contractors engaged in such repair and restoration in appropriate progress payments. Any cost of such repair and restoration in excess of the insurance proceeds shall constitute a Common Expense and the Board of Managers may assess all the Unit Owners for such deficit as part of the Common Charges.

10.3.2 If seventy-five percent (75%) or more of the building containing the Units is destroyed or substantially damaged (as determined the Board), and Unit Owners whose percentage of Common Interest totals seventy-five percent (75%) in the aggregate of the total Common Interest, inclusive of the Common Interest appurtenant to Non-Residential Units, do not duly and promptly resolve to proceed with repair or restoration, the Property shall be subject to an action for partition at the suit of any Unit Owner or lienor, as if owned in common, in which event the

net proceeds of sale together with the net proceeds of insurance policies (or if there shall have been a repair or restoration pursuant to these By-Laws, and the amount of insurance proceeds shall have exceeded the cost of such repair or restoration, then the excess of such insurance proceeds) shall be divided by the Board or the Insurance Trustee, as the case may be, among all the Unit Owners in proportion to their respective Common Interests, after first payment out of the share of each Unit Owner the amount of any unpaid liens on their Unit, the order of the priority of such liens.

10.3.3 "Prompt" and "promptly" as used in this section shall mean the later of (i) ninety (90) days from the date the Insurance Trustee or the Board of Managers receives the insurance proceeds, or (ii) sixty (60) days from the date the Insurance Trustee or the Board of Managers notifies the Unit Owners that the insurance proceeds are insufficient to pay the estimated costs of repair and/or restoration.

ARTICLE XI OPERATION OF PROPERTY

11.1. Other Provisions as to Use. All valid laws, zoning ordinances and regulations of governmental bodies having jurisdiction thereof, relating to any portion of the Property shall be complied with at the full expense of the respective Unit Owners or the Board of Managers, whoever shall have the obligation to maintain such part of the Property.

11.2. Right of Access.

11.2.1 Each Unit Owner grants a right of access as set forth in the Declaration to such Unit Owner's Unit to the Board of Managers, the managing agents, managers, and/or any other person authorized by any of the foregoing upon reasonable notice during reasonable hours in such a manner as will not unreasonably interfere with the use of the Units for their permitted purposes. In case of an emergency, such right of entry shall be immediate, without advance notice, whether or not the Unit Owner is present.

11.2.2 Each Unit Owner grants a right of access as set forth in the Declaration to such Unit Owner's Unit, and the Board of Managers shall grant rights of access to the Common Elements to Declarant and its contractors, subcontractors, architects, engineers, agents and employees, for the completion of the Building and any punch list work therein, provided that access thereto shall be exercised upon reasonable notice during reasonable hours in such a manner as will not unreasonably interfere with the use of the Units for their permitted purposes.

11.3. Abatement and Enjoinment of Violations by Unit Owners

11.3.1 The breach of any provisions contained herein, or the breach of any provision of the Declaration, shall give the Board of Managers the right, in addition to such other rights set forth in these By-Laws, (i) to enter any Unit or Common Element in which, or as to which, such violation or breach exists and to summarily abate and remove, at the expense of the defaulting Unit Owner, any structure, thing or condition resulting in such violation or breach and the Board of Managers shall not thereby be deemed guilty or liable in any manner of trespass; or (ii) to enjoin, abate or remedy by appropriate legal proceedings, either at law or in equity, the continuance of any such violation or breach.

11.3.2 The violation or breach of any of the provisions of these By-Laws or the Declaration with respect to any rights, easements, privileges or licenses granted to Declarant or its designee shall give to Declarant and its designee the right, in addition to any other rights set forth in these By-Laws or the Declaration, to enjoin, abate or remedy by appropriate legal proceedings, either at law or in equity, the continuance of any such violation or breach.

11.3.3 In the event the Board of Managers and/or the Declarant (hereinafter the "Creditor Party") takes any action or brings any proceeding against a Unit Owner (excluding Declarant) (hereinafter the "Defaulting Unit Owner") pursuant to the provisions of the Declaration or these By-Laws, the Defaulting Unit Owner shall reimburse the Creditor Party for all reasonable costs and charges incurred by the Creditor Party in connection therewith, including without limitation, attorney's fees, together with all reasonable out of pocket costs and expenses incurred by the Creditor Party, together with interest on all of the foregoing at the rate of interest of 1.5% per month (but in no event in excess of the maximum rate permitted by law) from the date of the payment or performance of the service by the Creditor Party may bill the Defaulting Unit Owner therefor at any time. Such funds expended by the Creditor Party plus interest earned thereon, as aforesaid, shall be deemed a charge assessed against the Defaulting Unit Owners Unit and the failure to make such reimbursement shall be deemed a default in the payment of Common Charges subject to the provisions governing such defaults as set forth in the Condominium Act and the By-Laws and the Board of Managers, upon receipt of such funds from the Defaulting Party shall promptly reimburse the Creditor Party, provided that the Creditor Party is the successful party in such action or proceeding.

ARTICLE XII SALE, LEASE AND MORTGAGING OF UNITS

12.1. Sale and Lease of the Non-Residential Unit(s). Non-Residential Unit Owners may sell, lease, and/or mortgage their Unit without the prior approval or consent of the Board of Managers, subject to the use restrictions set forth in the Declaration and these By-Laws, and such sale or lease shall not be subject to the Board of Managers' right of first refusal.

12.1.1 Subordination, Non-Disturbance and Attornment. Any lease of the Non-Residential Units shall be subordinate to the terms of the Declaration and these By-Laws, and any conflict between the terms of any such lease, and the Declaration and/or the By-Laws shall be resolved in favor of the latter. At the request of a Non-Residential Unit Owner, the Board of Managers will enter into a non-disturbance agreement (the "Non-Disturbance Agreement") in a form reasonably satisfactory to the Non-Residential Unit Owner, on commercially reasonable terms customary for similar mixed use buildings in the New York City metropolitan area, with any tenant of the Non-Residential Unit, which provides that, provided that the lease is in full force and effect, (i) unless required by law to preserve any claims on behalf of the Board of Managers against the Non-Residential Unit Owner, procedural or otherwise, the Board of Managers will not name or join the tenant as a party defendant in any action or proceeding to foreclose upon the Board of Managers' lien for Common Charges or other amounts against the Non-Residential Unit, (ii) it will recognize the tenant's rights pursuant to the lease, (iii) it will not disturb the tenant's possession or diminish the tenant's rights and privileges under the lease, (iv) it will not increase the tenant's obligations pursuant to the lease, (v) provided such tenant is not in default under the terms of such lease beyond

all applicable notice and grace periods, it will not interfere with the tenant's use, possession or enjoyment of the Non-Residential Unit, and (vi) subject to the provisions of the Non-Disturbance Agreement and provided such tenant is not in default under the terms of such lease beyond all applicable notice and grace periods, the rights of the tenant granted pursuant to the lease will not be disturbed. In the event that the Board or any other party succeeds to the interests of a Non-Residential Unit Owner in a Non-Residential Unit by reason of the foreclosure of the Non-Residential Unit or the delivery of a deed to the Non-Residential Unit, the tenant will agree to be bound to the Board or other party under all of the terms, covenants and conditions of the Lease and the tenant will attorn to the Board or other party as its landlord, and the Board of Managers will recognize the tenant as the direct tenant of the Board or its successor on the same terms and conditions as are contained in the lease. The Board of Managers, at the request of a Non-Residential Unit, shall promptly execute and deliver the Non-Disturbance Agreement in confirmation of the foregoing. The Non-Residential Unit Owner, as applicable, shall pay all reasonable costs and expenses of the Board of Managers in connection therewith. During the Control Period, Sponsor may execute any Non-Disturbance Agreement to be provided pursuant to the terms of this Article.

12.2. Sale and Lease of the Residential Units. No Residential Unit Owner, other than the Declarant, may convey their Unit or any interest therein by sale or lease except in the manner set forth in this Section. Any sale or lease of any Residential Unit in violation of this Section shall be voidable at the election of the Board of Managers.

12.2.1 Right of First Refusal. Other than a sale or lease by Declarant, a successor of Declarant, a registered mortgagee or their assignee, a sale or lease from a Unit Owner to an immediate family member, or a sale or lease from an ownership entity to an affiliate of said ownership entity, any lease or sale of a Residential Unit shall be subject to the Board of Managers' right of first refusal.

(b) Any contract to sell a Residential Unit, together with the Appurtenant Interests, and any lease of any Residential Unit ("Sale Agreement" or "Lease Agreement") shall contain the following language: "THIS AGREEMENT AND THE RIGHTS AND OBLIGATIONS OF THE PARTIES HEREUNDER ARE HEREBY MADE EXPRESSLY SUBJECT TO THE RIGHTS IF ANY, OF THE BOARD OF MANAGERS OF THE CONDOMINIUM WITH RESPECT TO THE TRANSACTION EMBODIED HEREIN PURSUANT TO THE TERMS OF THE BY-LAWS OF THE CONDOMINIUM, AS THE SAME MAY HAVE BEEN AMENDED." Promptly after such bona fide Sale Agreement or Lease Agreement shall be fully executed, the Unit Owner executing the same ("Offeree Unit Owner") shall send written notice thereof to the Board of Managers by certified or registered mail, or overnight mail, which notice shall be accompanied by a copy of the fully executed Sale Agreement or Lease Agreement, as the case may be, containing all of the terms offered in good faith by the prospective purchaser or tenant ("Outside Offeror"). The sending of this notice shall constitute an offer by the Offeree Unit Owner to sell the Unit, together with its appurtenant interests, or to lease the Unit, as the case may be, to the Board or to its designee, corporate or otherwise, on behalf of all Unit Owners. The giving of such notice shall further constitute a representation and warranty by the Offeree Unit Owner to the Board of Managers, on behalf of all Unit Owners, that such Offeree Unit Owner

believes the Sale Agreement or Lease Agreement to be bona fide in all respects. Thereafter, upon the written demand, the Offeree Unit Owner shall submit to the Board of Managers, in writing, such further information with respect to the Outside Offeror and the Sale Agreement or Lease Agreement as the Board of Managers may reasonably request.

(c) The Board of Managers may elect, by sending written notice thereof to the Offeree Unit Owner by certified or registered mail, or overnight mail, not later than thirty (30) days (in the event of a proposed sale) and fifteen (15) business days (in the event of a proposed lease) after receipt of (i) the notice referred to in subparagraph (a) hereof, or (ii) all other information reasonably required by the Board of Managers, whichever is later, to purchase or lease the Offeree Unit, as the case may be, on behalf of all Residential Unit Owners upon the same terms and conditions as were contained in the Sale Agreement or Lease Agreement. Notwithstanding anything to the contrary contained herein, however, the Board of Managers shall not exercise any option set forth in this Article to purchase or lease any Residential Unit without the prior approval of a majority of Residential Unit Owners by number. The Board of Managers may use the Unit for any use permitted under the Declaration or these By-Laws.

(d) In the event the Board of Managers fails to exercise its right of first refusal within the time period set forth in subparagraph (b) above, the Offeree Unit Owner shall be free to consummate the transaction embodied in the Sale Agreement or Lease Agreement within sixty (60) days after (i) notice of refusal is sent to the Offeree Unit Owner by the Board of Managers, or (ii) the expiration of the period in which the Board of Managers might have accepted such offer, as the case may be. If the Offeree Unit Owner shall fail to consummate the transaction embodied in the Sale Agreement or Lease Agreement within such sixty (60) day period, then, should the Offeree Unit Owner thereafter elect to sell such Residential Unit or to lease such Unit, the Offeree Unit Owner shall be required again to comply with all of the terms and provisions of subparagraphs (a) and (b) hereof, but not more often than once in any twelve (12) month period. The Board of Managers shall have the right to waive this requirement for good cause shown, in its sole discretion.

(e) The Board of Managers shall not discriminate against any person on the basis of race, creed, color, national origin, sex, age, disability, marital status, or other grounds prohibited by law in exercising its right of first refusal set forth herein.

(f) In the event the Board of Managers does exercise its right of first refusal with respect to the sale of a Residential Unit, the acquisition of the Unit may be made from the working capital and Common Charges, or, if such funds are insufficient, the Board of Managers may assess each Residential Unit Owner, other than the offering Unit Owner, in proportion to each Residential Unit Owner’s percentage of Residential Common Interest, or may borrow money to finance such acquisition. The sole security which may be given for any funds so borrowed is the Unit to be acquired. The Board of Managers may also assess each Residential Unit Owner, as provided above, for Common Charges for the Unit, or the rent due pursuant to the Lease, and for the cost of maintenance and repairs to such Unit. Neither the Board of Managers nor any Residential Unit Owner shall be entitled to cast any votes attributable to such Residential Unit.

(g) Notwithstanding the above, the right of first refusal held by the Board of Managers shall not adversely impact the rights of a mortgagee or its assignee to:

a. foreclosure or take title to a unit pursuant to the remedies in the mortgage;
b. accept a deed or assignment in lieu of foreclosure in the event of default by a mortgagor; or
c. sell or lease a unit acquired by the mortgagee or its assignee.

In the event any provision in this section conflicts with (a) through (c) above, the rights of the registered mortgagee as set forth herein shall control.

12.2.2. Leasing. All leases of Residential Units must be for a minimum period of one (1) year (with each such lease being to a specific named tenant and with no right to substitute any other tenant during the term of the lease). All such leases shall be consistent with the By-Laws and shall contain such reasonable conditions as the Board of Managers may impose in order to protect the physical and financial security and continuity of the Condominium, including (but not limited to) the following provisions:

(a) the lease may not be modified, amended, extended or assigned, without the prior written consent of the Board of Managers;
(b) the tenant may not sublet the demised premises, or any part thereof, without the prior written consent of the Board of Managers;
(c) the Board of Managers shall have the right to terminate the lease on not less than thirty (30) days prior written notice upon foreclosure of the lien granted by Section 339-z of the New York State Real Property Law; and
(d) the lease must contain an attornment provision that conforms with the provisions Section 339-kk of the Real Property Law.

The Board of Managers may establish other reasonable regulations governing leases of Residential Units from time to time. Except as set forth above, the form of any such lease shall be substantially in the then current form of apartment lease recommended by The Real Estate Board of New York, Inc. or New York City Bar Association with such modifications as may be approved in writing by the Board of Managers. The foregoing restrictions on leasing and the contents of leases contained herein shall not apply to a Residential Unit owned by Declarant, or a designee or successor of Declarant, or a Residential Unit owned by a mortgagee who took title for its own account in foreclosure or by deed in lieu of foreclosure.

12.2.3. Mortgages. No Residential Unit Owner may mortgage their Unit except by a mortgage loan granted by a federal or state savings and loan association, savings or commercial bank, life insurance company, pension fund, trust company, agency of the United States Government or of the City or State of New York or other similar institutional lender provided that (i) the Board of Managers is notified in writing of the making of the mortgage and receives a conformed copy of the mortgage and note; (ii) the mortgage states that if consent by the mortgagee is required to any amendment to the Condominium Declaration and By-Laws such consent will not be unreasonably withheld or delayed; and (iii) the Unit Owner making such mortgage first

pays all assessments and Common Charges previously assessed by the Board of Managers against the Unit, and satisfies all unpaid liens against the Unit, except for the lien of a permitted mortgage. Notwithstanding the foregoing, the Declarant and Non-Residential Unit Owners shall have the right to mortgage their Units without restrictions or limitation, but any such mortgage shall contain the representations in clauses (ii) and (iii) of this paragraph (if applicable).

12.3. Waiver of Partition Rights. The Unit Owners waive all rights to partition their Unit except as otherwise set forth herein.

12.4 Power of Attorney. At the time of acquiring title to a Unit and as a condition thereof, the new Unit Owner shall duly execute, acknowledge and make arrangements for recording in the City Register's Office, the Unit Power of Attorney required under the Declaration.

12.5 Payment of Assessments. No Unit Owner shall convey, mortgage, pledge, hypothecate, sell or lease their Unit unless and until all unpaid Common Charges assessed against their Unit shall have been paid to the Board of Managers. However, such unpaid Common Charges can be paid out of the proceeds from the sale of a Unit or by the grantee. Further, a Unit Owner may convey their Unit and their Common Interest appurtenant thereto, to the Board of Managers on behalf of all Unit Owners free of any cost to the Board or the Unit Owners and upon such conveyance such Unit Owner shall not be liable for any Common Charges thereafter accruing against such Unit. The provisions of this Section shall not apply to the acquisition or sale of a Unit by a mortgagee who shall acquire title to such Unit by foreclosure or by deed in lieu of foreclosure. Such provisions shall, however, apply to any purchaser from such mortgagee.

12.6. Gifts, etc. Any Unit Owner may convey or transfer their Unit by gift during their lifetime or devise their Unit by will or pass same by intestacy without restriction.

ARTICLE XIII AMENDMENTS

13.1. General. Except as otherwise stated in the Declaration and this Article XIII, these By-Laws may be altered, amended or added to at any duly called Unit Owners' meeting provided that: (1) the notice of the meeting shall contain a full statement of the proposed amendment; (2) the amendment shall be approved by Unit Owners representing sixty-seven percent (67%) by number, including Non-Residential Unit Owners, and if material in nature by fifty one (51%) percent of the Registered Mortgagees; and (3) said amendment shall be set forth in a duly recorded amendment to the Declaration. Approval or consent to any change to the Declaration or these By-Laws by a Registered Mortgagee will be implied if the Registered Mortgagee fails to submit a response to any written proposal for an amendment within sixty (60) days after it receives proper notice of the proposal, provided the notice was delivered by certified or registered mail, with a "return receipt" requested. However, no amendment shall affect or impair the validity or priority of the Unit Owner's interests and the interests of holders of a mortgage encumbering a Unit or Units, or adversely affect Declarant’s rights. Notwithstanding the foregoing, wherever in this section the consent of a Registered Mortgagee or a majority of Mortgagee representatives is required, the written consent of the Sponsor Mortgagee must be given, provided that such Sponsor’s Registered Mortgage has not yet been satisfied.

13.2. Amendments Affecting Solely the Non-Residential Units or the Residential Units.

13.2.1 Any provision of the Declaration or By-Laws benefiting, protecting or otherwise affecting only Non-Residential Units, and/or Non-Residential Unit Owners, other than provisions restricting the use of such Unit, may be amended, modified or deleted by Non-Residential Unit Owners

13.2.2 Any provision of these By-Laws benefiting, protecting or otherwise affecting only the Residential Units, the Declarant or the Residential Unit Owners may be amended, modified or deleted by the Declarant or by a vote of sixty-seven percent (67%) of the Residential Unit Owners by number as applicable without the consent of the Board or the other Unit Owners. However, the Board of Managers shall cooperate with the Declarant's or Residential Unit Owner's efforts to amend such provision, including executing, acknowledging and delivering any document required to effectuate such amendment.

13.3. Amendments Requiring Additional Consent.

13.3.1 Any amendment to these By-Laws that would materially and adversely impact the rights and obligations of a Non-Residential Unit Owner, or the permitted use of a Non-Residential Unit shall require the consent of the Non-Residential Unit Owners

ARTICLE XIV CONDEMNATION

14.1. General. In the event all or part of the Common Elements are taken in condemnation or eminent domain proceedings, the award from such proceedings shall be paid to the Insurance Trustee if the award is more than $100,000.00, and to the Board of Managers if the award is $100,000.00 or less.

14.1.1. Except as otherwise set forth herein, any award from such proceedings shall be distributed as follows:

(a) So much of the award as is applicable to Common Elements, to the Unit Owners pro rata according to their respective Common Interests appurtenant to the Units owned by such Unit Owners.

(b) So much of the award as is applicable to irrevocably Common Elements, to the Unit Owners having general use of such Common Elements. Any change in the provisions of this Article shall not be valid unless a majority of the Registered Mortgagees approves such a change. Notwithstanding the foregoing, wherever in this section the consent of a Registered Mortgagee or a majority of Mortgagee representatives is required, the written consent of the Sponsor Mortgagee must be given, provided that such Sponsor's Registered Mortgage has not yet been satisfied.

14.1.2 In such eminent domain or condemnation proceeding, the Board of Managers shall request that the award shall set forth the amount allocated to Common Elements. In the event the award does not set forth such allocation, then the question of such allocation shall be submitted to

arbitration in accordance with these By-Laws.

ARTICLE XV RECORDS AND AUDITS

15.1. Records. The Board or the Managing Agent shall keep detailed records of the actions of the Board of Managers, minutes of the meetings of the Board of Managers, minutes of the meetings of the Units Owners for whom the Board of Managers serves and financial records and books of account with respect to the activities of the Board of Managers, including a listing of all receipts and expenditures. In addition, the Board of Managers shall keep a separate account for each Unit, which among other things, shall contain the amount of each assessment of Common Charges made by the Board of Managers against each such Unit, the date when due, the amounts paid thereon and the balance, if any, remaining unpaid.

15.2. Audits. Within four months after the end of each fiscal year, an annual report of receipts and expenditures prepared and certified by an independent certified public accountant shall be submitted by the Board of Managers to all Unit Owners and, if so requested, to any Registered Mortgagee. The cost of such report submitted by the Board of Managers shall be paid by the Unit Owners as a Common Charge.

15.3. Availability of Documents. Copies of the Declaration, these By-Laws, the Rules and Regulations and the Floor Plans, as the same may be amended from time to time, shall be maintained at the office of the Board of Managers and shall be available for inspection by Unit Owners and their authorized agents during reasonable business hours.

ARTICLE XVI ARBITRATION

16.1. General. Any matter required or permitted to be determined by arbitration pursuant to the terms of the Declaration or By-Laws shall be submitted for resolution by a single arbitrator in a proceeding held in the City of New York in accordance with the rules of the then existing rules of the American Arbitration Association or any successor organization thereto. In the event that the American Arbitration Association shall not be in existence and has no successor organization, any such arbitration shall be held before an arbitrator appointed by a court of competent jurisdiction.

16.2. Alternatives. The parties to any matter required or permitted to be determined by arbitration pursuant to the terms of the Declaration or By-Laws may, by written agreement, vary any terms of this article, and may agree to resolve the matter in any manner, including, without limitation, the manner set forth in §3031 of the New York Civil Practice Law & Rules and known as the Simplified Procedure for Court Determination of Disputes.

16.3. Binding Effect. The decision in any arbitration conducted pursuant to the terms of this article shall be binding upon all of the parties thereto and may be entered in any court of competent jurisdiction.

16.4. Fees, Costs, and Expenses. The fees, costs, and expenses of the arbitration, including those of the arbitrator, attorneys, and witnesses, shall be borne by the losing party in the arbitration, unless otherwise provided for in the Declaration or By-Laws. If neither party substantially prevails,

as determined by the arbitrator, then fees, costs, and expenses of the arbitrator shall be borne equally by the parties.

16.4.1. All fees, costs, and expenses paid or incurred by the Board of Managers in connection with any arbitration shall constitute Common Expenses to be borne by all Unit Owners if such arbitration relates to the Common Elements or applies to the Units generally.

16.4.2. All fees, costs, and expenses paid or incurred by the Board of Managers in connection with any arbitration shall constitute Residential Common Expenses to be borne by Residential Unit Owners if such arbitration relates solely to Residential Common Elements or Residential Units.

ARTICLE XVII MISCELLANEOUS

17.1. Insurance. Under no circumstances shall a Unit Owner permit or suffer anything to be done or left in their Unit that will increase the insurance rates on their Unit or any other Unit or on the Common Elements.

17.2. Severability. Should any of the covenants, terms or provisions herein imposed be void or be or become unenforceable at law or in equity, the remaining provisions of these By-Laws shall, nevertheless, be and remain in full force and effect.

17.3. Notice to Condominium. A Unit Owner who mortgages their Unit shall notify the Condominium through the Managing Agent, if any, or the President of the Board of Managers in the event there is no Managing Agent, of the name and address of their mortgagee; and the Board of Managers shall maintain such information in a book "Mortgagees of Units."

17.4. Notice of Unpaid Assessments. The Board of Managers shall, at the request of a Registered Mortgagee or a Unit Owner, report any unpaid assessments due from the Unit Owner of such Unit.

17.5. Construction. Wherever the masculine singular form of the pronoun is used in these By-Laws, it shall be construed to mean the masculine, feminine or neuter, singular or plural, wherever the context so requires.

17.6. Compliance with Article 9-B. These By-Laws are set forth to comply with the requirements of Article 9-B of the Real Property Law of the State of New York. In case any of these By-Laws conflict with the provisions of said Statute or the Declaration, the provisions of the Statute or of the Declaration, whichever the case may be, shall control.

17.7. Depository. The Depository shall be a savings bank, a savings and loan association or a commercial bank or trust company designated by the Board of Managers to serve as Depository, provided all funds held by such Depository shall be held in New York City. In the event the Depository resigns or the Board of Managers wishes to replace it, the Board of Managers shall promptly appoint a new Depository in accordance with the terms of this Section. The Board of Managers shall pay the fees and disbursements of any Depository and such fees and disbursements shall constitute a Common Charge. The Depository shall hold all such proceeds in accordance with

Section 254(4) of the Real Property Law of the State of New York. If required by Declarant's construction or permanent lender, and subject to the foregoing requirements, such lender shall be the Depository until its release of all Units from the lien of its mortgage.

17.8. Successors and Assigns. Except as set forth herein or in the Declaration to the contrary, the rights and/or obligations of Declarant or Successor Sponsor as set forth herein shall inure to the benefit of and be binding upon any Successor Sponsor. Subject to the foregoing, Declarant and Successor Sponsor shall have the right, at any time in their sole discretion, to assign or otherwise transfer their respective interests herein, whether by sale, merger, consolidation, lease, assignment or otherwise.

17.9. Covenant of Further Assurances.

17.9.1 Any party which is subject to the terms of these By-Laws, whether such party is a Unit Owner, a lessee or sublessee of a Unit Owner, an occupant of a Unit, a member or officer of the Board of Managers, or otherwise, shall, upon prior reasonable written request at the expense of any such other party requesting the same, execute, acknowledge and deliver to such other party such instruments, in addition to those specifically provided for herein, and take such other action, as such other party may reasonably request to effectuate the provisions of these By- Laws or of any transaction contemplated herein or to confirm or perfect any right to be created or transferred hereunder or pursuant to any such transaction.

17.9.2 If any Unit Owner, Board or other party which is subject to the terms of these By-Laws fails, within ten days after request therefor, either (i) to execute, acknowledge or deliver any instrument, or to take any action which such Unit Owner, Board or party is required to execute, acknowledge and deliver or to take pursuant to these By-Laws, or (ii) to deliver a written notice to the party requesting such execution, acknowledgement or delivery, and to the Board of Managers, stating the reasons why such Unit Owner, Board or other party refuses to execute, acknowledge or deliver such instruments or take such action, then the Board of Managers which represents such Unit Owner, Board or other party, coupled with an interest, to execute, acknowledge and deliver such instrument, or to take such action in the name of such Unit Owner, Board or other party and such document or action shall be binding on such Unit Owner, Board or other party.

17.9.3 If any Unit Owner, Board or other party which is subject to the terms of these By-Laws fails, within ten days after request therefor, either (i) to execute, acknowledge or deliver any instrument, or to take any action which such Unit Owner, Board or party is required to execute, acknowledge and deliver or to take pursuant to these By-Laws at the request of Declarant or its designee, or (ii) to deliver a written notice to Declarant or its designee, as applicable, and to the Board of Managers stating the reasons why such Unit Owner, the Board or other party refuses to execute, acknowledge or deliver such instrument or take such action, then Declarant or its designee is hereby authorized, as attorney-in-fact for such Unit Owner, the Board or other party, coupled with an interest, to execute, acknowledge and deliver such instrument, or take such action, in the name of such Unit Owner, the board or other party and such document or action shall be binding on such Unit Owner, the Board or other party, as the case may be.

17.10. First Mortgagee’s Rights Confirmed. No provision of the Declaration or these By-Laws

gives a Unit Owner or any other party priority over any rights of the first mortgagee of the Condominium Unit pursuant to its mortgage in the case of payment to the Unit Owner of insurance proceeds or condemnation awards for losses to or a taking of Units and/or Common Elements.

RULES AND REGULATIONS

In addition to the other provisions of these By-Laws, the following Rules and Regulations, together with such additional Rules and Regulations as may hereafter be adopted by the Board of Managers, shall govern the use of the Residential Units and the conduct of all residents thereof:

1. Owners of a Unit, their employees, licensees and guests shall not use or permit the use of the premises in any manner which would be illegal or disturbing or a nuisance or otherwise unreasonably interfere with the safety, comfort, use, or convenience of the other Unit Owners or occupants of the Building, or in such a way as to be injurious to the reputation of the Condominium.

2. The Common Elements and the Limited Common Elements shall not be obstructed, littered, defaced or misused in any manner, except as may be provided for herein.

3. Every Unit Owner shall be liable for any and all damage to the Common Elements and the property of the Condominium, which shall be caused by said Unit Owner or such other person for whose conduct he is legally responsible.

4. Every Unit Owner must perform promptly all maintenance and repair work to its own Unit, which, if omitted, would affect the Condominium in its entirety or in a part belonging to other Unit Owners, or the Building of which its Unit forms a part, such Unit Owner being expressly responsible for the damages and liabilities that its failure to do so may engender. All the repairs to internal installations of the Unit located in and servicing only that Unit, such as telephones and sanitary installations, shall be at the Unit Owner's expense.

5. No Unit Owner shall paint the exterior surfaces of the windows and doors opening out of their Unit.

6. Each Unit Owner shall keep their Unit in a good state of preservation and cleanliness, and shall not sweep or throw or permit to be swept or thrown therefrom or from the doors or windows thereof, any dirt or other substance.

7. Nothing shall be installed in or be projected from any window, balcony or wall of the Building by a Unit Owner without similar approval.

8. No Unit Owner or any of their agents, servants, employees, licensees or visitors shall at any time bring into or keep in their Unit any inflammable, combustible or explosive fluid, material, chemical or substance, except for normal household use.

9. No Unit Owner shall make or permit any disturbing noises in their Unit or do or permit anything to be done therein which will interfere with the rights, comforts or conveniences of other Units Owners. No Unit Owner shall play upon or suffer to be played upon any musical instrument or operate or permit to be operated a CD player, radio or television set or other loud speaker in such Owner's Unit between the hours of 12:00 midnight and the following 7:00 A.M. if the same shall disturb or annoy other occupants of the Building and in no event shall practice or

suffer to be practiced either vocal or instrumental music between the hours of 10:00 P.M. and the follow 9:00 A.M.

10. No garments, rugs or similar items shall be hung from the windows or from any other part of the Building or balconies or terraces or clotheslines strung on or over the Common Elements (including any irrevocably restricted areas).

11. No sign of any kind shall be displayed to the public view on or in any Unit.

12. No birds, animals or reptiles, except dogs or cats, shall be permitted in any Unit unless the same shall have been expressly permitted in writing by the Board of Managers or the Managing Agent, and such permission shall be revocable at any time by the Board of Managers or Managing Agent in their sole discretion. In no event shall more than two (2) animals be permitted in any Unit. No pet shall be permitted in the Common Elements, including dogs and cats, unless carried or on a leash.

13. No Unit Owner shall leave any personal property (i.e., bicycles, carriages, etc.) to be left in the hallways, corridors, lobby or other common areas.

14. No one shall ride bicycles, mopeds or skateboards on any portion of the Common Elements.

15. Every Unit Owner shall comply with the recycling laws of the City of New York or any other governmental entity having jurisdiction thereof.

16. Smoking and using electronic cigarettes is prohibited at all times in all enclosed common areas of the building, as required by law. Enclosed common areas of the building include, but is not limited to, indoor Common Elements such as a lobby, hallway, and stairway. Smoking and using electronic cigarettes is permitted at all times in all dwelling units and outdoor areas, unless otherwise restricted by law. This policy applies to any person on the premises. Complaints about violations shall be made promptly to the Board of Managers. Complaints should be made in writing and should be as specific as possible, including the date, approximate time, location where smoke was observed, description of incident, and apparent source of smoke. Unit Owners shall provide to prospective buyers or renters of their Units a copy of this Smoking Policy including by annexing it to any contract of sale or lease of their Unit.

SCHEDULE D TO THE DECLARATION OF THE CONDOMINIUM

The 37-14 34th Street Condominium
37-14 34th Street
Long Island City, NY 11101
Queens County

BUDGET ALLOCATION

THE 37-14 34TH STREET CONDOMINIUM

OFFERING PLAN

CERTIFICATIONS

CERTIFICATION BY SPONSOR

3714 LIC Development LLC
4918 3rd Avenue
Brooklyn, New York 11220

Dated: November 2, 2018

New York State Department of Law
Real Estate Finance Bureau
28 Liberty Street, 21st Floor
New York, NY 10005

Re: The 37-14 34th Street Condominium
37-14 34th Street, Queens, New York

The undersigned certifies as follows:

We are the Sponsor and the Principal of Sponsor of the Condominium offering for the captioned property. We understand that we have primary responsibility for compliance with the provisions of Article 23-A of the General Business Law, the regulations promulgated by the Attorney General in Part 20 and such other laws and regulations as may be applicable.

We have read the entire Offering Plan. We have investigated the facts set forth in the Offering Plan and the underlying facts. We have exercised due diligence to form a basis for this certification. We jointly and severally certify that the Offering Plan does, and that documents submitted hereafter by us which amend or supplement the Offering Plan will:

(i) set forth the detailed terms of the transaction and be complete, current and accurate;

(ii) afford potential investors, purchasers and participants an adequate basis upon which to form their judgment;

(iii) not omit any material fact;

(iv) not contain any untrue statement of a material fact;

(v) not contain any fraud, deception, concealment, suppression, false pretense or fictitious or pretended purchase or sale;

(vi) not contain any promise or representation as to the future that is beyond

reasonable expectation or unwarranted by existing circumstances; and

(vii) not contain any representation or statement which is false, where we:

(a) knew the truth;
(b) with reasonable effort could have known the truth;
(c) made no reasonable effort to ascertain the truth; or
(d) did not have knowledge concerning the representations or statements made.

This certification is made under penalty of perjury for the benefit of all persons to whom this offer is made. We understand that violations are subject to the civil and criminal penalties of the General Business Law and Penal Law.

[SIGNATURE PAGE TO IMMEDIATELY FOLLOW]

IN WITNESS WHEREOF, the undersigned has duly executed this certification as of the date first above written.

SPONSOR:

3714 LIC DEVELOPMENT LLC

By:
Name: Bentley Zhao
Title: Authorized Signatory

Sworn to me this 2nd day

of November, 2018

Notary Public

KANNON TAM
NOTARY PUBLIC
NO. 01TA6312436
QUALIFIED IN
KINGS COUNTY
COMM. EXP.
09/29/2021
STATE OF NEW YORK

PRINCIPAL:

Bentley Zhao

Sworn to me this 2nd day

of November, 2018

Notary Public

KANNON TAM
NOTARY PUBLIC
NO. 01TA6312436
QUALIFIED IN
KINGS COUNTY
COMM. EXP.
09/29/2021
STATE OF NEW YORK

MORALI ARCHITECTS

CERTIFICATION BY SPONSOR'S ARCHITECT

New York State Department of Law
Real Estate Finance Bureau
28 Liberty Street
New York, NY 10005
Attn: Real Estate Finance Bureau

Re: **The 37-14 34th Street Condominium**
37-14 34th Street, Long Island City, New York

The undersigned certifies as follows:

The Sponsor of the Offering Plan to convert the captioned property to condominium ownership retained our firm to prepare a report describing the construction of the property (the "**Report**"). We inspected the existing portions of the property on 37-14 34th Street Long Island City, NY; Block: 375 Lot: 24 Oct. 21st 2019, and we examined the building plans and specifications that were prepared by Morali Architects and approved by the New York City Department of Buildings on June 15th 2015, and prepared the Report dated Oct. 28th 2019, a copy of which is intended to be incorporated into the Offering Plan so that prospective Purchasers may rely on the Report.

The undersigned is a registered architect in the State in which the property is located.

We understand that we are responsible for complying with Article 23-A of the General Business Law and the regulations promulgated by the Department of Law in Part 20 insofar as they are applicable to this Report.

We have read the entire Report and investigated the facts set forth in the Report and the facts underlying it with due diligence in order to form a basis for this certification. This certification is made for the benefit of all persons to whom this offer is made.

We certify that the Report:

(i) sets forth in narrative form the description and/or physical condition of the entire property as it will exist upon completion of construction, provided that construction is in accordance with the plans and specifications that we examined;

(ii) in our professional opinion affords potential investors, purchasers and participants an adequate basis upon which to found their judgment concerning the description and/or physical condition of the property as it will exist upon the completion of construction, provided that construction is in accordance with the plans and specifications that we examined;

(iii) does not omit any material fact;

(iv) does not contain any untrue statement of a material fact;

(v) does not contain any fraud, deception, concealment, or suppression;

(vi) does not contain any promise or representation as to the future which is beyond reasonable expectation or unwarranted by existing circumstances;

(vii) does not contain any representation or statement which is false, where we

i. knew the truth;
ii. with reasonable effort could have known the truth;
iii. made no reasonable effort to ascertain the truth; or
iv. did not have knowledge concerning the representation or statement made.

We further certify that I am not owned or controlled by and have no beneficial interest in the Sponsor and that my firm's compensation for preparing this Report is not contingent on the conversion of the property to a condominium or on the profitability or price of the offering. This statement is not intended as a guarantee or warranty of the physical condition of the property.

[SIGNAGURE PAGE TO FOLLOW]

By: _____
Anthony J. Morali, RA

PENELOPE HENRIQUEZ
Notary Public - State of New York
NO. 01HE6309733
Qualified in New York County
My Commission Expires Aug 18, 2022

Seal

Sworn to me this

1 day of November, 2019

_____
Notary Public

Continental
Building Management LLC

TEL | 212-991-8030
WEB | www.uscbm.com
E-MAIL | howard@uscbm.com
4916 3RD AVE, BROOKLYN, NY 11220

CERTIFICATION BY EXPERT ON ADEQUACY OF BUDGET FIRST YEAR OF CONDOMINIUM OPERATION

June 25, 2019

New York State Department of Law
Real Estate Finance Bureau
28 Liberty Street, 21st Floor
New York, New York 10005

Re: The Condominium Offering Plan (the "**Plan**") for
The 3714 34th Street Condominium (the "**Condominium**")
37-14 34th Street
Long Island City, NY 11101 (the "**Premises**")

The undersigned certify as follows:

The Sponsor of the Condominium Offering Plan for the captioned property retained our firm to review Schedule B and Schedule B-1, containing projections of income and expenses for the first year of operation of the Condominium. Our experience in the field includes the management of real estate properties in New York. We have more than 5 years of experience. We currently manage approximately five properties, comprising approximately 120 residential and commercial units.

I understand that we are responsible for complying with Article 23-A of the General Business Law and the regulations promulgated by the Attorney General in Part 20 insofar as they are applicable to Schedules B and B-1.

I have reviewed the Schedules and investigated the facts set forth in the Schedules and the facts underlying it with due diligence in order to form a basis for this certification. I also have relied on my experience managing residential buildings.

I certify that the projections in Schedules B and B-1 appear reasonable and adequate under existing circumstances, and the projected income appears to be sufficient to meet the anticipated operating expenses for the projected first year of condominium operation.

I certify that the Schedules:

(i) set forth in detail the projected income and expenses for the first year of condominium operation;

Continental
Building Management LLC

TEL | 212-991-8030
WEB | www.uscbm.com
E-MAIL | howard@uscbm.com
4916 3RD AVE, BROOKLYN, NY 11220

(ii) afford potential investors, purchasers and participants an adequate basis upon which to found their judgment concerning the first year of condominium operation;

(iii) do not omit any material fact;

(iv) do not contain any untrue statement of a material fact;

(v) do not contain any fraud, deception, concealment or suppression;

(vi) do not contain any promise or representation as to the future which is beyond reasonable expectation or unwarranted by existing circumstances;

(vii) do not contain any representation or statement which is false, where I:

(a) knew the truth;
(b) with reasonable effort could have known the truth;
(c) made no reasonable effort to ascertain the truth;
(d) did not have knowledge concerning the representation or statement made.

I further certify that I are not owned or controlled by the Sponsor. I understand that a copy of this certification is intended to be incorporated into the Offering Plan. This statement is not intended as a guarantee or warranty of the income and expenses for the first year of Condominium operation. This certification is made under penalty or perjury for the benefit of all persons to whom this offer is made.

I understand that violations are subject to the civil and criminal penalties of the General Business Law and Penal Law.

By: Ruju Zhao
Name: Ruju Zhao
Title: Managing Member

Sworn to before me this
25th day of June, 2019

Notary Public

HOWARD T CHEN
Notary Public, State of New York
Reg. No. 01CH6334953
Qualified in Kings County
My Commission Expires 12-26-2019

Continental
Building Management LLC

TEL | 212-991-8030
WEB | www.uscbm.com
E-MAIL | howard@uscbm.com
4916 3RD AVE, BROOKLYN, NY 11220

CERTIFICATION BY EXPERT ON ADEQUACY OF BUDGET FOR COMMERCIAL UNIT FOR THE FIRST YEAR OF CONDOMINIUM OPERATION

June 25, 2019

New York State Department of Law
Real Estate Finance Bureau
28 Liberty Street – 21st Floor
New York, New York 10005

Re: The Condominium Offering Plan (the "**Plan**") for
The 3714 34th Street Condominium (the "**Condominium**")
3714 34th Street
Long Island City, NY 11101 (the "**Premises**")

To Whom It May Concern:

The Sponsor of the Condominium Offering Plan for the captioned property retained our firm to review or prepare Schedule B which includes projections of common charges payable by the owners of the commercial unit Our experience in the field includes the management of real estate properties in New York. We have more than 5 years of experience. We currently manage approximately five properties, comprising approximately 120 residential and commercial units.

I understand that we are responsible for complying with Article 23-A of the General Business Law and the regulations promulgated by the Department of Law in Part 20 insofar as they are applicable to the commercial unit listed in Schedule B.

I have reviewed the Schedule as it impacts upon the commercial unit and investigated the facts underlying it with due diligence in order to form a basis for this certification. I also have relied on my experience managing residential buildings.

I certify that the projections in Schedule B for common charges payable by the owners of commercial unit appear reasonable and adequate under existing circumstances to meet the anticipated operating expenses fairly attributable to such commercial unit(s) for the projected first year of condominium operation, and that the allocation of common charges attributable to the commercial unit also reflects special or exclusive use or availability or exclusive control of particular common areas.

I/We certify that the estimates in Schedule B for the common charges payable by the owners of the commercial unit:

(i) set forth in detail the projected common charges for the commercial unit(s) for the first year of condominium operation;

(ii) afford potential investors, purchasers and participants an adequate basis upon which to found their judgment concerning the common charges payable by the owners of the commercial unit;

(iii) do not omit any material fact;

(iv) do not contain any untrue statement of a material fact;

(v) do not contain any fraud, deception, concealment, or suppression;

(vi) do not contain any promise or representation as to the future which is beyond reasonable expectation or unwarranted by existing circumstances;

(vii) do not contain any representation or statement which is false, where I/we:

(a) knew the truth;

(b) with reasonable effort could have known the truth;

(c) made no reasonable effort to ascertain the truth; or

(d) did not have knowledge concerning the representation or statement made.

I further certify that we are not owned or controlled by the Sponsor. I understand that a copy of this certification is intended to be incorporated into the Offering Plan. This statement is not intended as a guarantee or warranty of the common charges fairly attributable to the commercial unit for the first year of condominium operation.

This certification is made under penalty of perjury for the benefit of all persons to whom this offer is made. I understand that violations are subject to the civil and criminal penalties of the General Business Law and Penal Law."

By: _____
Name: Ruju Zhao
Title: Managing Member.

Sworn to before me this
25th day of June, 2019

Notary Public

HOWARD T CHEN
Notary Public, State of New York
Reg. No. 01CH6334953
Qualified in Kings County
My Commission Expires 12-28-2019