CONDOMINIUM OFFERING PLAN

THE 1296 PARK PLACE CONDOMINIUM

A PLAN FOR CONDOMINIUM OWNERSHIP OF
PREMISES KNOWN AS
1296 PARK PLACE
COUNTY OF KINGS, CITY OF NEW YORK
BROOKLYN, NEW YORK 11213

8 RESIDENTIAL UNITS OFFERED FOR SALE

OFFERING PRICE OF 8 RESIDENTIAL UNITS.....$5,579,916.00

SPONSOR & SELLING AGENT:
1296 PARK PLACE PH LLC
1820 AVENUE M # 2394
BROOKLYN, NEW YORK 11230

ATTORNEYS FOR SPONSOR:
THE LAW OFFICE OF JAY LICHTMAN, P.C.
68 JAY STREET, SUITE 420
BROOKLYN, NEW YORK 11201
(347) 504-1724

DATE OF ACCEPTANCE FOR FILING: _____

THIS OFFERING PLAN MAY ONLY BE USED FOR 12 MONTHS FROM THIS DATE UNLESS EXTENDED BY A DULY FILED AMENDMENT.

SEE PAGE 1 FOR SPECIAL RISKS TO PURCHASERS.

THIS OFFERING PLAN IS THE ENTIRE OFFER TO SELL THESE CONDOMINIUM UNITS. NEW YORK LAW REQUIRES THE SPONSOR TO DISCLOSE ALL MATERIAL INFORMATION IN THIS PLAN AND TO FILE THIS PLAN WITH THE NEW YORK STATE DEPARTMENT OF LAW PRIOR TO SELLING OR OFFERING TO SELL ANY CONDOMINIUM UNIT. FILING WITH THE DEPARTMENT OF LAW DOES NOT MEAN THAT THE DEPARTMENT OF LAW OR ANY OTHER GOVERNMENTAL AGENCY HAS APPROVED THIS OFFERING.

BECAUSE SPONSOR IS RETAINING THE UNCONDITIONAL RIGHT TO RENT RATHER THAN SELL UNITS AFTER THE CONSUMMATION OF THE PLAN, THIS PLAN MAY NOT RESULT IN THE CREATION OF A CONDOMINIUM IN WHICH A MAJORITY OF THE UNITS ARE OWNED BY OWNER-OCCUPANTS OR INVESTORS UNRELATED TO THE SPONSOR. OWNER-OCCUPANTS AND NON-RESIDENT OWNERS, SUCH AS SPONSOR, MAY HAVE INHERENT CONFLICTS ON THE MANAGEMENT OF THE CONDOMINIUM. (SEE SPECIAL RISKS SECTION OF THE PLAN).

PURCHASERS FOR THEIR OWN OCCUPANCY MAY NEVER GAIN CONTROL OF THE BOARD OF MANAGERS UNDER THE TERMS OF THIS PLAN (SEE SPECIAL RISKS SECTION OF THE PLAN).

TABLE OF CONTENTS

PART I

PART II ii
A. SPECIAL RISKS 1
B. INTRODUCTION 18
C. DEFINITIONS 24
D. DESCRIPTION OF PROPERTY AND IMPROVEMENTS 27
E. LOCATION AND AREA INFORMATION 30
F. SCHEDULE A: OFFERING PRICES AND RELATED INFORMATION 31
G. NOTES TO SCHEDULE A 32
H. SCHEDULE B 35
H1. NOTES TO SCHEDULE B 36
I. SCHEDULE B-1 41
NOTES TO SCHEDULE B-1 42
J. COMPLIANCE WITH REAL PROPERTY LAW § 339 –I 43
K. CHANGES IN PRICES AND UNITS 44
L. INTERIM LEASES TO PURCHASERS 46
M. PROCEDURE TO PURCHASE 47
N. ASSIGNMENT OF PURCHASE AGREEMENT 59
O. EFFECTIVE DATE 60
P. TERMS OF SALE 62
Q. UNIT CLOSING COSTS AND ADJUSTMENTS 68
R. RIGHTS AND OBLIGATIONS OF SPONSOR 72
S. CONTROL BY SPONSOR 86
T. RIGHTS & OBLIGATIONS OF CONDOMINIUM BOARD, SUMMARY OF BYLAWS 89
U. RIGHTS AND OBLIGATIONS OF UNIT OWNERS & CONDOMINIUM BOARD 100
V. REAL ESTATE TAXES 112
W. COUNSEL'S INCOME TAX OPINION 122
X. RESERVE FUND 128
Y. WORKING CAPITAL FUND 129
Z. IDENTITY OF PARTIES 132
AA. REPORTS TO UNIT OWNERS 134
AB. DOCUMENTS ON FILE 135
AC. GENERAL 136
AD. SPONSOR'S STATEMENT OF BUILDING'S CONDITION 138
AE. ASBESTOS STATEMENT 139

PART II

Document No. 1:	Description of Property and Specifications
Document No. 2:	Form of Purchase Agreement
Document No. 3:	New York State and New York City Tax Forms
Document No. 4:	Form of Unit Owner's Power of Attorney
Document No. 5:	Form of Condominium Unit Deed
Document No. 6:	Declaration of Condominium
Document No. 7:	Condominium By-Laws
Document No. 8:	Article 36-B of the General Business Law-Warranties on Sales of New Homes
Document No. 9:	Form of Escrow Agreement
Document No. 10:	Form of Interim Lease Agreement
Certifications:	Sponsor and Principals Sponsor's Engineer/Architect Sponsor's Expert Concerning Adequacy of Budget

A. SPECIAL RISKS

The following is a summary of certain special risk considerations in connection with the Plan. It is not intended to summarize all major features of the Plan. Prospective purchasers are urged to read the following special risk factors in conjunction with the Plan for a discussion of these and other important aspects of this condominium offering.

1. The Sponsor is reserving the unconditional right to rent Units rather than sell Units after consummation of the Offering Plan. Accordingly, there is no commitment by Sponsor to sell more than 15% of the residential Units or two (2) residential Units, which is necessary to declare the plan effective and owner-occupants may never gain effective control and management of the condominium. Notwithstanding the fact that not all purchasers used for purposes of declaring the plan effective may actually close, Sponsor must re-declare the plan effective in order to consummate the offering plan in accordance with 13 N.Y.C.R.R. § 20.1(c)(6). If all purchase agreements are either rescinded or terminated prior to the date of first Unit closing, regardless of whether the condominium declaration has been recorded, Sponsor must re-declare the offering plan effective.

   The Sponsor has secured construction financing with Sharestates Investments, LLC, with an address at 11 Middle Neck Road, Suite 314, Great Neck, NY 11021. Sponsor believes said financing will be sufficient to complete construction of the Building. The minimum release price of the Units is eighty (80%) percent of the net sale price for each Unit. There is no restriction by the lender as to the number of Units that must be in contract for the lien on a Unit to be released. It will be the discretion of the lender whether to allow the Units to be converted to rental apartments. See section "Rights and Obligation of Sponsor."

2. The Condominium Board shall consist of three (3) individuals. Sponsor as Owner of Unsold Units shall have "voting control" (as defined herein) of the Condominium Board for five (5) years from the first closing of a Unit or whenever the unsold Units constitute less than twenty-five percent (25%) in Common Interest of all Units, whichever is sooner (i.e. the Sponsor Board Control Period). During the Sponsor Board Control Period, the Board shall be composed of two (2) Sponsor Board Members and one (1) Independent Board Member. After the Sponsor Board Control Period, a meeting will be held to elect an Independent Board Member unrelated to the Sponsor to replace the one of the Sponsor Board Members, however Sponsor shall continue to have the right, for so long as Sponsor owns at least at least one (1) Unsold Unit, to vote for all Independent Board Members and to exclusively appoint and designate one (1) Sponsor Board Member. After the Sponsor Board Control Period, the Board shall be composed of two (2) Independent Board Members, and one (1) Sponsor Board Member, for so long as Sponsor retains ownership of a residential Unit. See Section 2.7 of the by-laws. The By-laws do not contain a provision that after the Sponsor Board Control Period a majority of the Condominium Board must be owner-occupants or members of an owner-occupant's household who are unrelated to the Sponsor and its principals. Purchasers should note that owner-occupants may never gain effective control of the condominium. Owner occupants and non-resident owners, including the Sponsor, may have inherent conflicts on how the condominium should be managed because of their different reasons for purchasing, i.e. purchase as a home as opposed to as an investment. After all Units are sold, a meeting will be held to elect new board members unrelated to the Sponsor within thirty (30) days of the last closing or sooner. See Section entitled "Control by

Sponsor" for more details.

3. After the plan has been declared effective, Sponsor will serve a notice setting a closing date, which date shall not be earlier than thirty (30) days from the date of such notice. TIME IS OF THE ESSENCE to close on such date.

   In the event that a Purchaser (i) defaults in paying the balance of the Purchase Price on the date scheduled by Sponsor for closing title to his or her Unit; or (ii) defaults in performing some other obligation under the Purchase Agreement and fails to cure such default within thirty (30) days after Sponsor sends written notice to such Purchaser specifying the nature of the default, then Sponsor's remedy shall be the cancellation of the Purchase Agreement and the retention of the Liquidated Damages. Sponsor must provide (30) day written notice to Purchaser of the cancellation of the Purchase Agreement and the retention of the Liquidated Damages. If such Purchaser shall fail to cure such default or fails to send written notice of objection to the release of the Downpayment within the said thirty (30) day period, TIME IS OF THE ESSENCE, Sponsor may retain Liquidated Damages. The Sponsor may not retain more than 10% of the purchase price (regardless of the amount deposited with the Escrow Agent) plus any amounts paid for any special work or extras. Any payments received by Sponsor in excess of the Downpayment plus the actual cost incurred by Sponsor for any special work or upgrades together with any interest earned on such excess payments, if any, shall be refunded to the Purchaser with fifteen (15) days after cancellation. See Sections "Procedure to Purchase" and "Definitions" for further details.

4. The obligations of a purchaser under a Purchase Agreement are not conditioned on obtaining financing. Any prospective purchaser who executes a Purchase Agreement and does not obtain financing may lose his or her deposit if he or she is unable to otherwise raise the monies for the balance of the purchase price. Prospective purchasers who require financing are advised to consult with a lending institution before execution of a Purchase Agreement. No representation is made by the Sponsor as to the availability or cost of such financing. The Sponsor may in its sole discretion consent to a Financing Contingency Rider attached hereto in Part II of the Offering Plan Document No. 2 Exhibit B.

   Purchasers should note that in the current market, banks and other lenders are imposing various restrictions on purchase financing. Such restrictions include requiring that a certain percentage of apartments in a building or group of buildings be sold before a lender will consider making a loan. Thus, it may be possible for a Purchaser to experience difficulty obtaining a loan in a building or group of buildings where the Sponsor or holder of unsold shares has not sold a substantial percentage of the apartments in the building or group of buildings, which in some cases may be as high as 70%. Moreover, some lenders will not provide financing in a building or group of buildings where an investor other than the original Sponsor has an ownership interest of 10% or more. It may also be difficult for a Purchaser to resell an apartment if prospective buyers are unable to obtain a loan due to the same minimum sales and investor ownership restrictions.

   In the event that Sponsor consents to financing, a Financing Contingency Rider must be executed by both parties. Purchaser shall have forty-five (45) days from the Contract Date (the "Financing Contingency Expiration Date") to obtain a mortgage commitment from a Lender. If Purchaser fails to obtain a mortgage commitment by the Financing Contingency Expiration Date,

Purchaser must notify Sponsor of failure to obtain such commitment within five (5) days of the Financing Contingency Expiration Date. If Purchaser only applies to Purchaser's Preferred Lender and a commitment is not issued or a rejection is received, Sponsor may require Purchaser to submit an application to Sponsor's Preferred Mortgagee. Shimon Rosenberg, Private Mortgage Banker, New Construction Specialist, Wells Fargo Home Mortgage | 150 E 42nd St New York, NY 10017, Tel 212-214-6711 | Cell 718-564-9068 | Fax 866-943-1195, Email: Shimon.M.Rosenberg@wellsfargo.com, provided the Condominium meets the Preferred Mortgagee presale requirements. Purchaser will have additional time to obtain a mortgage commitment from Sponsor's Preferred Mortgagee. All terms of the Financing Contingency are applicable regardless of whether the Purchaser applies to the Purchaser's Preferred Lender or the Sponsor's Preferred Mortgagee.

Provided that the Sponsor consents to permit a Financing Contingency in accordance with the above terms and the purchaser complies with all of such terms, if the financing commitment lapses or expires prior to closing and Purchaser has made a good faith effort to extend the commitment, the Sponsor will grant Purchaser a right of rescission and ten (10) days after expiration to exercise such right. If Sponsor does grant Purchaser a Financing Contingency, and a mortgage commitment is not fulfilled through no fault of the Purchaser, under New York law performance is excused. If Purchaser acts in good faith and lender revokes the commitment after the contingency period expires, performance is excused, and the Sponsor must grant to such purchaser a right of rescission and a reasonable period of time to exercise such right.

Purchaser should note that even if a mortgage commitment is secured, said mortgage commitment may expire or change prior to the actual closing. Any risks related to the expiration or change to the mortgage commitment shall be borne by the Purchaser, if Purchaser is at fault.

In the event Purchaser fails to exercise the right of termination within time periods set forth the Financing Contingency Rider or has failed to satisfy the conditions set forth in the Financing Contingency Rider, then, in either case, the Purchase Agreement shall remain in full force and effect. See Section "Procedure to Purchase" for more details.

5. The Sponsor's Preferred Mortgagee requires that at least 30% percent of the units be sold and at least 30% percent of the units be owner-occupied before it will close a loan. As the closing of the purchaser's is contingent upon the satisfaction of this condition, it is a special risk that even if a purchaser obtains and satisfies all conditions of the financing commitment applicable to the purchaser, the closing of the loan may be delayed or may not occur if the minimum sales and owner-occupancy requirements are not satisfied, If the Sponsor's Preferred Mortgagee does not close a purchaser's loan for this reason, the Sponsor shall grant to such purchaser a right of rescission and a reasonable period of time to exercise such right.

   The Condominium declaration and by-laws contain provisions typically required by Freddie Mac, Fannie Mae and FHA loan requirements (i.e. reserve fund, mortgagee consent rights).. See Section "Procedure to Purchase" for more details.

6. In the event a purchaser does not close on the Closing Date set forth in the Notice of Closing and the Sponsor elects not to cancel the Purchase Agreement or if the Sponsor approves the Purchaser's request to adjourn the Purchaser's closing to his apartment, interest shall accrue on the unpaid amount of the purchase price from the Closing Date or adjourned closing date until

such amount is paid. The interest rate shall be ten percent (10%) per annum calculated at a daily rate of approximately 0.0277%. This rate shall be in effect for as long as there are any unpaid amounts owing towards the full purchase price. The interest rate charged will not exceed New York State usury charges. See Section "Procedure to Purchase" for further details.

7. Purchaser will be responsible for the following costs at closing, in addition to the purchase price and other closing costs listed in the Section "Unit Closing Costs and Adjustments."

   (a) Although statutorily Seller's expense, Purchaser shall pay the Real Property Transfer Tax due to the City of New York. This tax is in the amount of one percent (1%) of the total purchase price of the Unit, if the price is $500,000.00 or less; and 1.425% of the total purchase price of the Unit if more than $500,000.00. The Purchaser shall also pay for the New York State Deed Documentary stamps (currently $2.00 per $500.00 or a fractional portion thereof of the purchase price) imposed by statute on the transferors of the property. For purposes of calculating the transfer taxes to be paid, consideration includes the transfer taxes paid by the purchaser.

   (b) Each purchaser will be required to pay an additional $3,500.00 at closing to defray Sponsor's costs, e.g., architectural costs, filing fees, legal fees and other costs incurred in creating the condominium. See Sections "Schedule A" and "Unit Closing Costs and Adjustments."

   (c) Purchaser shall be obligated to pay a fee of (i) $2,500.00 to the law firm of Sponsor's attorney for services rendered in connection with recording the Declaration of Condominium and the preparation of documents (ii) $350.00 if the closing is held at any location other than Sponsor's attorney's office at the request of the purchaser (iii) $350.00 payable to Sponsor's attorney if Purchaser applies for and closes with a mortgage; (iv) $250.00 payable to Sponsor's attorney for preparing e-forms for New York City Real Property Transfer Tax; and (v) $350.00 for each time the closing is rescheduled due to the purchaser (for the costs to fix a new Closing Date and time, to coordinate the attendance of all persons, to re-date the closing documents and to recalculate the closing apportionments).

   (d) Purchaser will be required to deposit with the Condominium Board two (2) months' common charges for his Unit to be used as working capital. See Section "Working Capital Fund" for details.

   (e) Purchaser shall pay all governmental fees and title company service charges associated with discharging and recording a mortgage lien release and UCC-3 termination statement or other appropriate instruments discharging the Unit and its contents from any mortgage lien and security interest other than the lien of any mortgage loan Purchaser obtains.

   (f) At closing, the Sponsor will collect each purchaser's pro-rated share in the first year's insurance premium from the date of the closing until the end of the first year of condominium operation. This amount will be calculated in proportion to each purchaser's common interest and will be used to reimburse the Sponsor for payment of the first year's premium. Insurance premiums paid as part of common charges from closing until the end of the budget year will be retained by the Board to pay toward the premium for the next year. The pro-rated insurance adjustment collected by Sponsor will be in lieu of any other closing adjustments with the Board. See Section "Unit Closing Costs and Adjustments."

8. THE SPONSOR HAS ACCESS TO SUFFICIENT FUNDS TO COMPLETE THE BUILDING AND/OR RENOVATION, HOWEVER, NO BOND OR OTHER SECURITY HAS BEEN POSTED TO SECURE SPONSOR'S OBLIGATIONS. NO WARRANTY IS MADE THAT SPONSOR WILL BE FINANCIALLY ABLE TO PERFORM ANY OF ALL OF SUCH OBLIGATIONS. See Section "Rights and Obligations of the Sponsor."

9. Sponsor is not providing a washer/dryer, blinds, or shades to the Units; it will be the responsibility of each Unit owner to provide them at his or her own cost. The Sponsor will provide hook-ups for a domestic type washer and ventless electric dryer. The Sponsor will provide each Unit with a refrigerator, dishwasher, microwave and stove for each Unit. See Part II, "Description of Property" for further details.

10. As common charges do not include heating costs, each Unit owner is responsible for the payment of the electricity and gas costs of his individual Unit. See Schedules B and B-1 for further details.

11. The escrow account in which down payments or advances made by purchasers will be placed is covered by federal bank deposit insurance to $250,000.00 per individual deposit. Any deposit in excess of $250,000.00 will not be insured to the extent such amount exceeds $250,000.00. If a purchaser has an account at the same bank that holds the escrowed funds, purchaser's funds at the escrow bank factor into the $250,000 insurance limit. See Section "Procedure to Purchase" for further details.

12. All funds received by the Sponsor for upgrades or extras must initially be placed in the escrow account. However, purchasers should note that such funds may be released from the escrow account by the escrow agent as long as the Sponsor uses the funds for such upgrades or extras. As a result, in the event a purchaser is entitled to rescission, the purchaser will not receive a refund of any funds used for upgrades or extras. If, however, the Plan is abandoned, Unit upgrade funds will be returned to Purchasers. See Section "Procedure to Purchase" for details.

13. For as long as Sponsor or its designee is the owner of one (1) or more Units in the entire condominium, the Declaration, By-Laws and Rules and Regulations may not be amended or modified so as to adversely affect Sponsor or its designee without the prior written consent of every Unit Owner affected by such amendment. See Section "Rights and Obligations of Condominium Board, Summary of By-Laws" for details.

14. No representation is made that the initial working capital fund will be adequate to cover current or future expenses, including repairs or replacements, and if additional funds are required over and above the initial capital fund, it may be necessary for the Condominium Board to increase the charges. See Section "Working Capital Fund" for details.

15. All conflicts that may be resolved by arbitration pursuant to NYS law, between Unit owners and the Condominium Board, between Condominium Board Members, or between sponsor and the board, with respect to the Condominium, or to break any deadlock in voting in any matter, must be submitted to arbitration for resolution by a single arbitrator in a proceeding in Kings County or other mutually agreed to location in accordance with the existing rules of the AAA or any successor organization within 90 days of the dispute. The arbitrator shall be a third party mutually agreed upon by affected parties and shall be neutral and independent of any parties involved. Costs shall be shared equally by the parties. Each disputant shall also be responsible for fees and

expenses of counsel and expert witnesses. The parties are giving up the right to bring suit in court, including trial by jury. Arbitration awards are generally final and binding, and a party's ability to appeal this decision is very limited. This provision does not abrogate a party's rights under Article 23-A of the New York General Business Law. This does not include any disputes regarding the Purchase Agreement. See Section "Rights & Obligations of Board of Managers, Summary of Bylaws" for details.

Except as otherwise expressly provided in the Declaration or the By-Laws, the affirmative vote of a majority of the members of the Condominium Board shall constitute the decision of the Condominium Board. Alternatively, any decision that is required or permitted to be made by the Condominium Board may be made without a meeting thereof if all of the members of the Condominium Board shall individually or collectively consent in writing to such decision, and all such written consents shall be duly filed by the Condominium in the minutes of the Condominium Board. In the event of a deadlock in voting between the Unit Owners or in the Condominium Board, such deadlock shall be submitted to an arbitration board in accordance with Article 10 of the By-Laws, "Arbitration." See Section "Rights and Obligations of Condominium Board, Summary of By-Laws."

16. In the event Purchaser-in-contract enters into an Interim Lease and Purchaser-in-contract defaults on the Purchase Agreement and fails to close, and after notice from Sponsor to vacate Purchaser-in-contract fails to vacate, Purchaser-in-contract will pay Sponsor $250.00 per day for each day he remains in possession beyond the thirtieth (30th) day following mailing of the Notice to Vacate. See sections "Interim Leases" and also see Part II, Document No. 10 for a form of said lease agreement.

    An uncured default under the Purchase Agreement is a default under the lease and an uncured default under the lease is a default under the Purchase Agreement. If Sponsor desires to declare a default of the Purchase Agreement as a result of an uncured default under the lease Sponsor must either obtain an order of eviction or other judgment or order from a court or agency of competent jurisdiction against the lessee, unless the lessee has vacated the contracted-for Unit.

17. The Sponsor prior to any Unit closing and the Condominium Board after the first Unit closes shall retain risk of loss to the Building from fire or other casualty. The Sponsor shall retain the risk of loss to the Unit from fire and other casualty until the Purchaser-in-contract shall be conveyed legal title or until the Purchaser-in-contract occupies the contracted-for Unit and assumes risk of loss from the Sponsor. Unit Owners should obtain the following at their own cost: homeowner's insurance including coverage for the contents of the Unit, personal property, and liability for personal injury as a result of occurrences in the individual Unit. See Sections "Procedure to Purchase" and "Terms of Sale."

18. Prior to the first closing, the entire building will be insured by the Sponsor; after the first closing, the entire building will be insured by the condominium. A person in possession who is not an owner cannot insure the Unit since he or she has no ownership interest, and the Unit cannot be doubly insured. Therefore, a purchaser who takes possession of the contracted-for-Unit prior to closing assumes the risk of losses not covered by insurance; if the Unit is damaged prior to closing the purchaser in possession's failure to make repairs will not excuse them from paying the balance of the purchase price and accepting delivery of the deed for the contracted-for Unit. See Section "Interim Leases."

19. The Sponsor reserves the right to make changes in size, layout and number of unsold Units without the approval of the Condominium Board. The Sponsor will file an amendment to the offering plan disclosing any such changes and any material changes must be with the consent of any affected purchasers. A decrease in a unit's area of 5% or less will not affect a purchaser's obligations unless such decrease is determined to be a material change. There is a rebuttable presumption that an area that is diminished by 5% or less is not material. Please consult with your attorney and engineer/architect on this issue prior to closing. See Section "Changes in Prices and Units" for further details.

20. All Unit Owners shall severally indemnify each member of the Condominium Board against any liability or claim, contractual or otherwise, except those arising out of the bad faith, willful misconduct or gross negligence of such member or that are contrary to law or the terms of the Declaration or the By-Laws. However, the liability of any Unit Owner on account of the indemnification of the Condominium Board will be limited to such proportionate share thereof as the Common Interests of such Unit Owner bear to the aggregate Common Interests of all Unit Owners. There is no provision for insurance covering indemnification of Board members. It is at the discretion of the Condominium Board to obtain such coverage, the cost of which will be borne by the Unit Owners as a common expense. The annual insurance premiums may increase by 10-15% if coverage is obtained. See Section "Rights and Obligations of Condominium Board."

21. The balconies, stairs, areaway and terrace may not be used for any type of use that is classified as habitable space as defined by the New York City Building Code, such uses include but are not limited to using a balcony or terrace as a living room, bedroom or kitchen. To do so may result in a violation against the building being issued by the New York City Department of Buildings. See "Notes to Schedule A."

22. The cellar, which contains accessory space for Units 1F and 1R, and utility rooms for the Building, may not be used for bedrooms, dining rooms, or any other use considered to be a "habitable space" as defined by the New York State Building Code. Additionally, spaces in the cellar may not be rented independently. Rental or use by the owner as living, cooking and/or sleeping quarters may result in an Environmental Control Board (ECB) violation being issued by the New York City Department of Buildings, which would be the responsibility of the Unit owner to cure. Purchasers should note that cellar space has less light and air and is more susceptible to dampness. See "Notes to Schedule A."

23. Unit Owners shall be responsible for purchasing laundry equipment. The washer and dryer can only be stackable to fit in the laundry closet and the dryer must be vent-less as there is no dryer ventilation system.

24. There will be no gas service provided to the building.

25. Unit owners shall not have any right to install structures or perform any construction on terraces, roof areas, without approval of a third-party architect retained by the Condominium Board. See Section "Rights and Obligations of Unit Owners and Condominium Board."

26. The approximate area (within reasonable tolerances) calculates the square footage as the area of each Unit consisting of the area measured horizontally from the outside face of the glass window

and/or exterior walls to the centerline of the partitions separating one Unit from another Unit or to the center line of the partitions separating a Unit from corridors, stairs, elevators and other mechanical equipment spaces that are not part of the Unit. Each Unit consists of the area measured vertically from the top of the floor to the underside of the ceiling. The Square footage in the Schedule A is not based upon measurements from interior surfaces or interior walls, and the area compromising the Unit may be significantly less than the area listed in Schedule A. There is a rebuttable presumption that a Unit size that is diminished by five percent (5%) or less is not material.

Dimensions shown on the floor plans reflect the approximate interior dimensions of main areas of the Unit. The Square footage's shown in the Schedule A are within reasonable tolerances of the true measurements of the observable living spaces. Purchasers should verify each room and closet dimensions to their liking prior to closing. Purchasers are also advised that, after the closing, disputes related to room dimensions shall not be considered as a basis for rescission. Please consult with your attorney and engineer/architect on this issue prior to closing. See "Schedule A" for further details.

27. The Sponsor anticipates that the first closing of a Unit will occur by January 1, 2020. Purchasers will be offered a right of rescission if: (i) the actual date of closing of title to the first unit; or (ii) the projected date of closing of title to the first Unit occurs later than December 31, 2020, twelve months after the projected date for the first closing. If the Plan is amended to provide for a later projected date for the first closing, purchasers who enter into purchase agreements after the amendment is accepted for filing will be entitled to an offer of rescission if the first closing occurs more than 12 months beyond that amended, later date.

    However, if the first closing occurs before January 1, 2021, the Sponsor may schedule the closings of title to other Units significantly later than such date. Unless your Purchase Agreement contains an outside closing date, the Sponsor is not obligated to schedule your closing within any specified time frame or to ensure that closing of title to your closing within any specified time frame or to ensure that closing of title to your Unit will occur by any date certain. PROSPECTIVE PURCHASERS SHOULD THEREFORE CAREFULLY CONSIDER SUCH RISKS IN THEIR DETERMINATION AS TO WHETHER TO PURCHASE A UNIT. See sections "Procedure to Purchase" and "Effective Date" for further details.

28. As this building's height is less than five (5) stories, the Housing Merchant Implied Warranty applies to this offering. Pursuant to Article 36-B of the General Business Law, the Sponsor has elected to limit the Housing Merchant Implied Warranty.

    (a) The Sponsors maximum liability to any Unit owner under the Sponsor's Limited Warranty is limited to fifty percent (50%) of the purchase price of the Unit. Additionally, the Sponsor's Limited Warranty is limited to actual purchasers and their successors whom acquire title to the subject Unit by will or by the governing intestacy laws. However, despite the limitation, Sponsor must construct the premises in accordance with all applicable codes and filed plans and specifications. Furthermore, any conflict between the disclaimers and the Sponsor's obligation to construct the premises in accordance with all applicable codes and filed plans and specifications shall be resolved in favor of the latter. See Section "Rights and Obligations of Sponsor" for further details and additional limitations. See Part II Document 8 "Article 36-B of the General Business Law Warranties on the Sale of New Homes" for further details and

additional limitations.

(b) The Sponsor's Limited Warranty excludes all consequential, incidental, special damages not foreseeable to the Sponsor and indirect damages.

(c) The Sponsor's Limited Warranty does not cover defects in appliances, fixtures, equipment and household items, except defects due to improper installation by the Sponsor.

(d) The Sponsor's Limited Warranty does not cover any defects for any labor or in any work or materials ordered directly by any purchaser from Sponsor's sub-contractors, suppliers, or any independent contractor not engaged in any non-delegable duty(ies).

(e) The Sponsor's Limited Warranty is limited to actual purchasers and their successors whom acquire title to the subject Unit by will or by the governing intestacy laws.

(f) In addition, the following items are not covered by the Sponsor's Limited Warranty:

(i) conspicuous defects and any defects which an inspection of the Unit would reveal;

(ii) damage caused by the failure of the purchaser or any affiliate thereof, to comply with the requirements of the Sponsor's Limited Warranty or of any requirements imposed by a manufacturer, supplier of appliances, fixtures, equipment or household items;

(iii) damage caused by the misuse, overuse, or interference by purchaser or anyone other than the Sponsor or its employees or delegates;

(iv) any additional damage caused by the failure of purchaser to give adequate notice to the Sponsor of any defects or damage in a timely fashion as provided in the Sponsor's Limited Warranty;

(v) any damage caused by changes, alterations or improvements made to the Unit by anyone other than the Sponsor or its employees or delegates;

(vi) any damage caused by purchaser's failure to adequately maintain and preserve any item or property covered under the Sponsor's Limited Warranty;

(vii) any loss or damage caused by or stemming from an accident, catastrophe, unnatural forces due to violence or gross negligence, fire, explosion, smoke, motor vehicles, acts of God, lightening, windstorm, hail, flood, earthquake, soil movement, and changes in the underground waterbase;

(viii) any loss or damage caused by seepage of water unless such loss or damage is directly related to a construction defect resulting from construction by the Sponsor;

(ix) any damage resulting from purchaser's failure to take timely action to mitigate any pre-existing damages;

(x) any condition resulting from normal wear and tear or form normal settling of the building,

including but not limited to, concrete cracks, outer building cracks which do not impair the structural stability of the building;

(xi) insects, vermin, rodent damage and infestation, or damage caused by other animals or pests;

(xii) death, bodily injury or damage to personal property;

(xiii) damage which arises from any misuse or unauthorized use of the Unit.

(g) Any exclusion or modification of warranties that does not meet or exceed a relevant specific standard of the applicable building code, or in the absence of such standard, a locally accepted building practice, shall be void as contrary to public policy. In addition, any exclusion or modification of warranties that fails to ensure that a home is habitable by permitting conditions to exist which render the home unsafe, shall be considered void as well.

(h) A written notice of a warranty claim for breach of a housing merchant implied warranty must be received by the builder prior to the commencement of any action no later than thirty days after the expiration of the applicable warranty period. The owner and occupant of the home shall afford the builder reasonable opportunity to inspect, test and repair the portion of the home to which the warranty claim relates.

(i) The Sponsor's limited warranty replaces all other warranties on the construction and sale of the Unit and any and all components thereof, both express and implied (including but not limited to, any implied warranties of merchantability or fitness for a particular purpose). The full text of Sponsor's limited warranty is annexed to the purchase agreement and set forth in part ii of this plan. Purchasers are urged to review the Sponsor's limited warranty carefully before executing a purchase agreement.

(j) The Sponsor's obligation, regardless of any limitations in the warranty or in this offering plan, is to construct the premises in accordance with all applicable codes and filed plans and specifications, and that any conflict between the disclaimers and the Sponsor's obligation to construct the premises in accordance with all applicable codes and filed plans and specifications shall be resolved in favor of the latter.

29. Purchasers are advised that in New York City, newly constructed and newly renovated buildings are sometimes offered as condominium projects without a final certificate of occupancy ("FCO") covering the entire building but with only a temporary certificate of occupancy ("TCO"), and sometimes with several successive temporary certificates of occupancy. Certificates of occupancy are generally governed by Section 301 of the New York Multiple Dwelling Law and local building codes and rules. Both TCOs and FCOs are issued by the New York City Department of Buildings ("DOB"). A TCO is intended to indicate that the property is safe for occupancy but means that not all of the construction work and/or inspections have been performed, or that not all of the required documents have been submitted to the DOB. All TCOs have an expiration date. A TCO typically expires 90 days after the date of issuance. When a TCO expires and is not renewed, it may be difficult or impossible to buy insurance, refinance, or sell Units. In New York City, it is common for Sponsors to commence Unit closings when some or all Units are covered by a TCO rather than a FCO. Sponsor anticipates this scenario may occur.

Sponsor and its principals will undertake the responsibility for extending each TCO received prior to expiration thereof and ultimately for obtaining a FCO covering the entire building within two years from the date of the issuance of the first TCO. However, Sponsor and its principals make no representation or guarantee that DOB will issue the FCO within such two-year period. Notwithstanding the foregoing, Sponsor and its principals are obligated to procure the FCO for the entire building and shall exercise best efforts to obtain the FCO within such two-year period while keeping the TCO current. Unit owners and the Condominium Board shall be obligated to cooperate with and refrain from obstructing Sponsor in these undertakings.

As described in greater detail in the plan, Sponsor will maintain sufficient funds in escrow to cover the anticipated costs of obtaining a PCO. However, the TCO may lapse for reasons outside the Sponsor's control. In the absence of a PCO or TCO it is unlawful to reside in or rent a Unit and will be difficult for owners or purchasers to obtain financing or pass clear title.

Buyers are advised to visit the DOB website for further recommendations when purchasing a Unit in a building that does not have an FCO. A Fact sheet on Certificate of Occupancy is available on the DOB website at:
http//www.nyc.gov/html/dob/downloads/pdf/co_factsheet.pdf.

Furthermore, because Sponsor and the by-laws of the Condominium may permit Unit owners to undertake renovations to individual Units prior to the procurement of a FCO, such renovations may cause delays in the issuance thereof. Notwithstanding the foregoing, Sponsor and its principals are obligated to procure the FCO. See Section "Procedure to Purchase" for further details.

30. On January 1, 2018, the Tax Cuts and Jobs Act of 2017 went into effect. This federal law significantly changed the previously existing Internal Revenue Code, including the taxes and deductions related to homeownership. Accordingly, it is our opinion that a Unit Owner who itemizes deductions will be entitled to deduct, for federal income tax purposes, real estate taxes in the amount of up to $10,000.00 a year assessed against his Unit. Purchasers should note, that the $10,000.00 tax deduction is for the combined New York State income taxes, New York City (or local) income taxes and real estate taxes. Accordingly, in the event the Unit Owner's combined New York State income taxes, New York City (or local) income taxes and real estate taxes exceed the $10,000.00 threshold, a Unit Owner may not be able to realize a deduction for amounts over the $10,000.00 threshold. In addition, a Unit Owner who itemizes deductions will be entitled to deduct, for federal income tax purposes, interest on any acquisition indebtedness up to $750,000.00. See Sections 163 (interest) and 164 (taxes) of the Internal Revenue Code of 1986, as amended (the "Code"). These expenses will be deductible when paid or accrued in accordance with the Unit Owner's method of accounting. See Section "Counsel's Income Tax Opinion."

31. Sponsor has applied for Real Estate Tax exemption benefits pursuant to Section 421-a of the Real Property Tax Law under the old regime. An application for the Preliminary Certificate of Eligibility was filed on December 24, 2015. The Attorney General has recently issued a memo regarding disclosure of requirements and obligations of Sponsors and Unit Owners in Condominiums where the Sponsor has applied or plans to apply for benefits under § 421-a of the N.Y. Real Property Tax Law. In response to the memo, Sponsor makes the following disclosures:

(a) The building situated at 1296 Park Place, Brooklyn, New York, is not located in the statute's geographic exclusion area and as such, Sponsor does not need to comply with the statute's requirements for affordable Units.

(b) The buildings are exempt from the prevailing wage requirement for Building Service Employees (as defined in N.Y. Real Prop. Tax Law §421-a[8](a)(i)) because the building contains less than fifty (50) residential Units.

(c) Sponsor intends that the buildings shall be exempted from the statutory obligation to register the units as rent-stabilized by reason of its condominium status.

(d) Sponsor has not rented/will not rent any residential units to any person [other than an interim lessee] prior to the Plan being consummated, and therefore Sponsor is not obligated to abandon the offering plan in accordance with the provisions of 13 N.Y.C.R.R. §§ 20.1(l)(2) and 20.5(g). If the Sponsor does rent any residential Unit, other than pursuant to an interim lease, prior to consummation, the Sponsor will in such event be obligated to abandon the offering plan in accordance with the provisions of 13 N.Y.C.R.R. §§ 20.1(l)(2) and 20.5(g). In addition, the Sponsor will be obligated to inform HPD of its intent to operate as a rental building; and all units will be subject to rent stabilization.

(e) The buildings will be eligible for a 15 year 421-a tax abatement pursuant to a preliminary certificate of eligibility.

(f) Sponsor will have fifteen (15) months from the date of issuance of a final certificate of eligibility from the New York City Department of Housing Preservation and Development ("HPD") to declare its Plan effective.

(g) Sponsor will use its best efforts to ensure that the tax benefits obtained will remain in effect for the duration of the benefits period including the timely compliance with all procedures required to maintain the benefits. Upon closing, the Sponsor will make all documents available to the Board of Managers for inspection and copying for the duration of the benefits. See Section "Real Estate Taxes" for more details.

Projects which commenced construction between June 15, 2015, and December 31, 2015 (with the issuance of New Building or Foundation Permits), are eligible to benefit from the 421-a Tax Abatement Program, only if construction will be completed no later than December 31, 2019, with the issuance of a Certificate of Occupancy. Failure to complete the project within the allotted time frame will cause the project to be ineligible for the Final 421-a Tax Abatement benefits.

The total assessed value of the property (i.e., the aggregate assessment of all units) following completion of construction, is estimated to be $559,275.00, approximately. Using the foregoing assessed value, assuming a Class 2 tax rate of 12.612% (i.e., $12.612 per $100 of assessed value, the final 2018/2019 tax rates), the total real estate tax liabilities due, will be as follows:

Tax liability without 421-a abatement	
Total Assessed Value	$559,275.00
Total tax liability	$70,536.00

Tax liability with 421-a abatement	
Total Assessed Value with Cap	$25,430.00
Total tax liability with 421-a abatement	$3,207.00

Per the amended Rules & Regulations, only a portion of an apartment's billable exempt Assessed Value is now eligible for the 421-a tax exemption. The value of a Unit above this threshold ("AV cap") is ineligible to receive benefits. For units with an exempt Assessed Value above this Assessed Value cap, owners will pay taxes on the portion of Assessed Value above the cap, but still receive tax benefits on the portion of Assessed Value below the cap. The Assessed Value cap was originally set at $65,000 per Unit, however the amount has been increased by 3%, compounded annually, on each taxable status date following August 17, 2008, the first anniversary of the effective date of the State Law. As of tax year 2019/2020 the Assessed Value cap rate is $89,975. Unit 1R and Unit 4F are both above the Assessed Value cap rate.

Estimated real estate tax assessments are determined using various factors including sales price, square footage, location of the Unit, availability of limited common elements and/or access to common elements based on the Sponsor's expert's opinion letter of Metropolitan Realty Exemptions, Inc. 118 Middleton Street, Brooklyn, NY 11206. No assurances can be given that the taxing authorities will assess the building and allocate the assessments in the same manner and the actual assessments may not be in the same proportion as the common interests set forth in Schedule A. See section "Real Estate Taxes" for further details.

THE ABOVE IS NOT INTENDED TO BE A COMPLETE DISCUSSION OF ALL LIMITATIONS IMPOSED BY THE CODE, PARTICULARLY FOR INVESTORS. ALL PURCHASERS ARE ADVISED TO SEEK ADVICE FROM THEIR TAX CONSULTANTS CONCERNING TAX CONSEQUENCES OF THE PURCHASE OF A UNIT IN A CONDOMINIUM.

NO WARRANTY IS MADE THAT THE TAX BENEFITS WILL BE OBTAINED. IN THE EVENT THAT TAX BENEFITS ARE NOT OBTAINED, OR IN THE EVENT THAT THERE ARE INCREASES IN THE TAX RATE OR THE PROPERTY'S ASSESSED VALUATION OR IN THE STATUTES GOVERNING THE TAX BENEFITS, REAL ESTATE TAXES MAY BE HIGHER THAN SET FORTH HEREIN FOR THE FIRST YEAR OF OPERATION AND IN FUTURE YEARS AND ACCORDINGLY INDIVIDUAL CARRYING COSTS FOR THE UNITS WOULD ALSO BE HIGHER.

DUE TO THE POSSIBLE FURTHER INCREASES IN THE 2019/2020 AND 2020/2021 TAX RATES AND/OR POSSIBLE FURTHER INCREASES IN THE PROPERTY'S TAX-EXEMPT VALUATION, REAL ESTATE TAXES MAY BE HIGHER THAN AS SET FORTH FOR THE FIRST YEAR OF OPERATION AND IN THE FUTURE YEARS

The Condominium Board will use its best efforts to obtain the tax benefits. Sponsor will use best efforts to submit application for the Co-op/Condo Property Tax Abatement during the Sponsor Board Control Period. Purchasers will not be given a right of rescission if the condominium does not receive the tax abatement. Sponsor will cooperate with the Condominium Board to obtain the benefits and will keep and make available all records required in order to obtain the benefits. See Section "Real Estate Taxes."

After the Units have been separately assessed, tax review for each Unit will be the responsibility of the Unit Owner.

THERE IS NO ASSURANCE THAT THE TAXING AUTHORITY WILL ASSESS THE MINIMUM TAX PAYABLE WITH RESPECT TO THE UNITS, IF ANY, IN PROPORTION TO EACH UNIT'S COMMON INTEREST (AND IF NOT SO ASSESSED, UNITS HAVING THE SAME COMMON INTEREST MAY PAY DIFFERENT REAL ESTATE TAXES.

32. Each Unit Owner shall notify the Condominium Board or the Managing Agent, if any, in writing when a child or children, under the age of eleven (11) years lives or resides (even temporarily) in the Unit. Each Unit owner shall install at such Unit Owner's expense, the required window guards (or safety "stops" in lieu of window guards, designed specifically to prevent a child from falling out of the window) in all windows of the Unit in compliance with all applicable New York City Administrative code requirements. The Unit Owner should maintain all window guards (or stops) installed in the Unit and shall not remove same until permitted by applicable law and in any event, without prior written notice to the Managing Agent. For further discussion, see the By-Laws and the Addendum to By-Laws in Part II of the Offering Plan.

33. The building will be managed by Tri-State Property Management Group LLC, for the first year of condominium operation, for an annual fee of $16,400.00 which shall include the cost of the part-time superintendent and janitorial services approved by the Department of Buildings available 24 hours per day which is the prevailing rate. Tri-State Property Management Group LLC is affiliated with the Sponsor. The Unit owners are not responsible for cleaning the common areas while. After the first year, the fee charged may be higher and the Unit owners may choose to manage the condominium themselves or enter into a contract with an independent managing agent. During the Sponsor Board Control Period, Tri-State Property Management Group LLC will likely continue to manage the Condominium after the initial term of the agreement ends. Alternatively, the Sponsor will determine whether to change the managing agent or for the Condominium Board to manage the building. In the event that an outside managing agent is retained, the common charges may need to be increased. If the Condominium Board chooses to manage the building themselves during the Sponsor Board Control Period, owner-occupants and non-resident owners, such as Sponsor, may have inherent conflicts on the management of the condominium. The plan will be amended to reflect this change in the event Sponsor elects to manage the Condominium. See Section "Management Agreement" for further details.

34. The Units are being delivered with wood floors. Wood is a natural product and expands and contracts with weather conditions, which causes the floors appearance to change. Moreover, in order to maintain the quality of the floor, floors should be maintained and cleaned in accordance with the manufacturer's recommendations Care instructions can be found on the website of the National Wood Flooring Association (http://www.nwfa.org/). See Part II, Document No. 1 "Description of Property."

35. The condominium board does not have the right to approve or disapprove purchasers; therefore, there is no limit on the number of owners who may purchase for investment rather than for personal occupancy. See Section "Procedure to Purchase" for further details.

36. As the Sponsor is reserving an unconditional right to rent Units rather than sell after consummation of the plan it may arise that a Unit for purchase will have been previously

inhabited. If a buyer is purchasing a Unit that has been previously rented the buyer will purchase the property "as is" and purchaser is strongly recommended to make a thorough inspection of the Unit before closing. See Section "Procedure to Purchase" for further details.

37. The Condominium Board shall bear the responsibility to assure that all assessments have been paid, that each Unit Owner adheres to the rules and regulations of the Declaration & By-Laws and to collect any amounts payable to the Condominium. For further discussion, see the By-Laws and the Addendum to By-Laws in Part II of the Offering Plan.

38. Purchasers should note that the Reserve Fund may not be sufficient for needed capital improvements for the first five year of Condominium Operations and in the event any capital replacements are necessary, the board may impose a special assessment to cover the cost thereof. See Section "Reserve Fund" for further details.

39. The Purchaser will represent to Sponsor that he or she has not dealt with any broker other than the Selling Agent in connection with the acquisition of his or her Unit and will indemnify the Sponsor against the claims of any other broker, if such broker is not disclosed to the Sponsor at the time of the contract. See Section "Procedure to Purchase" for further details.

40. Smoking, which includes carrying, burning, or otherwise handling or controlling any lit or smoldering product containing tobacco or cloves, including but not limited to cigarettes, cigars, pipes or electronic cigarettes, shall be permitted only inside a Unit or in an outdoor Limited Common Element that is connected to a Unit. Smoking anywhere else in the Condominium shall be prohibited, including, but not limited to, in indoor and outdoor Common Elements. No Unit Owner shall smoke, or permit smoking by any occupant, agent, tenant, invitee, guest, friend, or family member anywhere on the property except in their Unit or in any outdoor Limited Common Element that is connected to the Unit. Smoking in violation of this rule shall constitute a nuisance pursuant to the terms and provisions of the By-Laws and shall be subject to a fine as reasonably determined by the Condominium Board. See Section "Rights and Obligations of Unit Owners and Condominium Board.

41. The principal of the Sponsor, Zaur Laven, had a prior bankruptcy in 2010 which has subsequently been satisfied and discharged. See Section "Identity of Parties".

42. As per a recent Order issued by the Financial Crimes Enforcement Network (FinCEN), order entitled "Geographic Targeting Order" (which Order can be obtained by visiting https://www.fincen.gov/sites/default/files/shared/Real%20Estate%20GTO%20GENERIC_111518_FINAL.pdf), for all closings on residential properties taking place on or after November 17, 2018, United States title insurance companies are now required to collect and report information regarding purchasers in transactions where:

    (a) the purchaser is a corporation, limited liability company, partnership or other similar business entity, whether formed under the laws of a state or of the United States or a foreign jurisdiction; and

    (b) the purchaser purchases residential real property located in the Boroughs of Brooklyn, Queens, Bronx, and Staten Island and total purchase price is in the amount of $300,000.00 or more; and

(c) such purchase is made without a bank loan or other similar form of external financing; and

(d) the purchase is made at least in part, using currency or a cashier's check, a certified check, a traveler's check, a personal check, a business check, a money order in any form, a funds transfer or virtual currency. See Section "Unit Closing Costs and Adjustments."

43. The Building was constructed in 1940. Buildings constructed prior to 1979 may contain lead paint, and buildings constructed before 1960 are presumed to contain lead paint. The ingestion of lead paint poses serious health risks, especially in young children. Purchasers are advised to familiarize themselves with New York City Local Law 1 of 2004, a copy of which is included as an exhibit to this plan. Purchasers for investment are advised that there are certain occupancy and turnover requirements contained therein. Purchasers of a Unit for their own occupancy, particularly those with young children, are additionally advised to consult with a professional to determine the existence of, and any appropriate remediation for lead paint.

44. The roof will have a 5-year manufacturer's warranty which will be begin on the date of installation.

45. During only the Sponsor Veto Control Period (defined below), the Condominium Board and the Unit Owners (as to any vote or action by them) must obtain Sponsor's prior written Discretionary Approval or Consent to do any of the following (collectively. "Sponsor Veto Control"):

(a) To raise Common Charges or levy a Special Assessment for any of the following purposes:

(1) to make an Alteration to the Common Elements, the Association's Properties (including any Unit owned, leased or otherwise held or Operated by the Board, or its nominee or designee);

(2) to increase or decrease or eliminated the mandated minimum ten percent (10%) Reserve for Capital Replacements to be included in each Budget in accordance with this Plan and the Condominium Documents (see below);

(3) to increase, decrease or eliminate Building services set forth in said First year's budget or otherwise; or

(4) to increase, decrease, eliminate or otherwise change the amount or types of insurance coverage from those set forth in said first year's budget.

(b) to borrow money on behalf of the Condominium Association.

Sponsor may not exercise veto power over expenses required:

(a) to comply with applicable laws or regulations;

(b) to remedy any notice of violation;

(c) to remedy any condition requiring repair or replacement immediately necessary for the preservation of or safety of the building or the health or safety of its residents or required to

avoid the suspension of services.

The Sponsor Veto Control Period will end on the earlier of: (a) the date that the Common Interest appurtenant to the Unsold Units constitute less than twenty-five (25%) of the aggregate Common Interests of all Units; or (b) the fifth (5th) anniversary of the First closing of a Unit under this plan.

46. No bird, reptile, cat or dog or any other animal shall be permitted, raised, bred, kept, or harbored in the Building unless, in each instance, the same shall have been expressly consented to in writing by the Condominium Board or the Managing Agent, which consent shall not be unreasonably withheld. See Section "Rights and Obligations of Unit Owners & Condominium Board."

B. INTRODUCTION

Purpose of the Offering Plan

The purpose of the Plan is to set forth all the material terms of the offer to sell these apartments as condominium Units. The Plan may be amended from time to time to reflect changes which materially affect the offering. All amendments will be filed with the New York State Department of Law and will thereafter be served upon purchasers who have executed and delivered Purchase Agreements to the Sponsor or Selling Agent, Unit Owners and any other person entitled to service pursuant to local law or regulation.

The Offer

The Sponsor presents this Offering Plan (the "Plan") for the establishment of condominium ownership of the Property (as hereinafter defined) pursuant to and in compliance with Article 9-B of the Real Property Law of the State of New York, as amended (the "Condominium Act"). The condominium shall be known as The 1296 Park Place Condominium (the "Condominium").

The offering plan encompasses the land, the structures and all appurtenances thereto at the following address: 1296 Park Place, Brooklyn, New York (the "Building"). The Sponsor is 1296 Park Place PH LLC, a New York Limited Liability Company, with an address at 1820 Avenue M # 2394, Brooklyn, New York 11230 (the "Sponsor"). The Sponsor acquired title to the property on September 27, 2016. The building was previously used for residential housing. The Sponsor/Developer is in the process of renovating the Building on the Premises with plans filed with and approved by the Department of Buildings of the City of New York. The building and land are hereinafter collectively referred to as the "Property."

The Sponsor is reserving the unconditional right to rent Units rather than sell Units after consummation of the Offering Plan. Accordingly, there is no commitment by Sponsor or the Sponsor's successor to sell more than 15% or two (2) Units, which is necessary to declare the plan effective. Notwithstanding the fact that not all purchasers used for purposes of declaring the plan effective may actually close, Sponsor must re-declare the plan effective in order to consummate the offering plan in accordance with 13 N.Y.C.R.R. § 20.1(c)(6). If all purchase agreements are either rescinded or terminated prior to the date of first Unit closing, regardless of whether the condominium declaration has been recorded, Sponsor must re-declare the offering plan effective.

The Sponsor has secured construction financing with Sharestates Investments, LLC, with an address at 11 Middle Neck Road, Suite 314, Great Neck, NY 11021. Sponsor believes said financing will be sufficient to complete construction of the Building. The minimum release price of the Units is eighty (80%) percent of the net sale price for each Unit. There is no restriction by the lender as to the number of Units that must be in contract for the lien on a Unit to be released. It will be the discretion of the lender whether to allow the Units to be converted to rental apartments. See section "Rights and Obligation of Sponsor."

The Sponsor hereby offers eight (8) residential Units for sale. The purchase prices and estimated Common Charges for each of the Units are listed in "Schedule A - Offering Prices and Related Information." THE PRICES CONTAINED IN THE PLAN HAVE BEEN SET BY SPONSOR WITHOUT ARMS LENGTH NEGOTIATION AND ARE NOT SUBJECT TO

APPROVAL BY THE DEPARTMENT OF LAW OR ANY GOVERNMENTAL AGENCY.

This Offering Plan including all Schedules and Parts A, B, C and D of the Exhibits constitute the entire Offer of the Sponsor, and copies of the Offering Plan and Parts A, B, C and D of the Exhibits will be available for inspection by prospective purchasers without charge during regular business hours at the office of the attorneys for the Sponsor, the office of the selling agent, the office of the Sponsor and the on-site office whenever the on-site office is open.

Basic Aspects of Condominium Ownership

The ownership of a condominium Unit is similar in many respects to the ownership of a private home. Each purchaser owns his Unit outright, in fee simple absolute, and is entitled to exclusive possession of his Unit together with an interest in and right to use the Common Elements and the Limited Common Elements, if any. The Common Elements essentially consist of all parts of the Property other than the Units themselves, are owned by all of the Unit Owners as tenants in common, each having an undivided interest therein.

The Common Elements consist of all portions of the Condominium Property that are not designated as Units or parts thereof. The Common Elements include, generally, but without limitation, the Condominium Property including the portions on which the Building is erected. See Section "Definitions" for further details.

In the event of a Bulk Sale by the Sponsor of all or some of its unsold Units, the transferee successor Sponsor will be bound by the same rights and obligations of the Sponsor. A Bulk Sale shall be the sale of two (2) or more Units to a single purchaser.

Limited Common Elements

Limited Common Elements generally are those Common Elements reserved for use and enjoyment by one or more Units.

The Limited Common Elements in this Condominium are the Rear Yard, Areaway, Stairs, Terrace and Balconies, allocated to the Units as shown on the Floor Plans. See Schedule A.

The Common and Limited Common Elements are not subject to partition nor are they severable from the Units except in accordance with The Condominium Act (Article 9-B of the Real Property Law).

Common Charges

Each Unit Owner must pay Common Charges in accordance with the New York Condominium Act, Sections 339-i and 339-m. These charges are payable on a monthly basis. Common Charges have been estimated by the Sponsor and include fire insurance for the Units, and liability insurance for the Common Elements, and maintenance and operation of the Common Elements. For more information on Common Charges and how they are assessed, see Article VI of the By-Laws attached hereto as Document No. 7.

All Unit owners are obligated to comply with the Declaration of the Condominium, the By

Laws of the Condominium and any other requirements laid out by the Condominium Board.

Ownership/Leasing of Units

Other than as set forth herein, there is no restriction upon ownership of a Unit.

Any Unit Owner may sell or lease his or her Unit to anyone, without restriction or limitation, subject only to Civil Rights laws (i.e.: Seller will not discriminate in the sale or lease of Units on the basis of race, creed, sex, color, disability, marital status, sexual orientation, or national origin, or other grounds prohibited by law) and the right of first refusal (if any) in favor of the Condominium Board of the Condominium (the "Condominium Board") or a third party produced by the Condominium Board to acquire or lease such Unit upon the same terms that were offered to the prospective buyer or tenant. Note that the following is merely a summary of conditions for the resale or lease of a Unit, and you are referred to Article 7 of the By-Laws attached hereto for detailed restrictions on sale, resale or leasing of Units. Any deed to a subsequent purchaser must provide that the acceptance thereof by the grantee constitutes an assumption of the provisions of the Declaration, the By-Laws, and the rules and regulations of the Condominium as they may be amended from time to time.

No Unit Owner may convey or mortgage title to his Unit without including therein the appurtenant interest.

No Unit Owner is permitted to convey, mortgage, pledge, hypothecate, sell or lease his Unit unless and until he has paid in full to the Condominium Board all unpaid Common Charges previously assessed by the Condominium Board against his Unit, and until he shall have satisfied all unpaid liens against the Unit, except permitted mortgages.

Powers/Duties of Condominium Board

The Condominium Board has the power and responsibility for the operation of the Condominium. These responsibilities include, among other things, the care, upkeep and maintenance of the Common Areas, collection of Common Charges from the Unit Owners, employment of personnel, adoption and amendment of rules and regulations, maintenance of bank accounts, obtaining insurance, making repairs, additions, improvements or alterations to the Common Elements, repair, reconstruction and restoration of damage by fire or other casualty, and such other functions as may be required in connection with the operation and maintenance of the Property. The Condominium Board will elect a President, a Secretary and a Treasurer. No member of the Board nor any officer will receive any compensation for acting in such capacity. The Board may engage a manager or managing agent to perform any of its delegable duties as provided in the By-Laws of the Condominium and may pay such manager or managing agent such compensation as the Board deems desirable. See Section "Rights and Obligations of Condominium Board."

Voting

Each Unit is entitled to vote as follows: all Unit Owners will be entitled to one (1) vote for each Unit owned in all matters which require a vote of the Unit Owners, including Board elections. Where title to a Unit is held by two (2) persons, each such co-owner will be entitled to one-half (½) such vote. Except in those instances where the New York Condominium Act, the Declaration

or the By-Laws provide otherwise, all matters to be decided by the vote of Unit Owners will be decided by a majority vote thereof.

All conflicts that may be resolved by arbitration pursuant to NYS law, between Unit owners and the Condominium Board, between Condominium Board Members, or between Sponsor and the board, with respect to the Condominium, or to break any deadlock in voting in any matter, must be submitted to arbitration for resolution by a single arbitrator in a proceeding in Kings County or other mutually agreed to location in accordance with the existing rules of the AAA or any successor organization within 90 days of the dispute. The arbitrator shall be a third party mutually agreed upon by affected parties and shall be neutral and independent of any parties involved. Costs shall be shared equally by the parties. Each disputant shall also be responsible for fees and expenses of counsel and expert witnesses. The parties are giving up the right to bring suit in court, including trial by jury. Arbitration awards are generally final and binding, and a party's ability to appeal this decision is very limited. This provision does not abrogate a party's rights under Article 23-A of the New York General Business Law. This does not include dispute between a Purchaser and the Sponsor with respect to the Purchase Agreement. In order to resolve any dispute, controversy, claim or question arising with respect to the Condominium, or to break any deadlock in voting, any disputes involving the condominium shall seek to be settled by arbitration. The Arbitration provisions do not preclude an owner from exercising their rights under Article 23-a of the General Business Law and the regulations promulgated thereunder. The arbitrator shall be a third party mutually agreed upon by affected parties.

Real Estate Taxes

Each Unit will be separately taxed for real estate tax purposes and, therefore, no Unit Owner is liable for the payment of real estate taxes on any Unit other than his own. No Unit is subject to the lien of a mortgage on any other Unit.

Insurance

Fire and liability insurance covering the entire Condominium are included with other items as part of the Common Charges, but fire and liability insurance for the purchaser's personal effects in the interior of each Unit, including, but not limited to decorations, painting, furniture or improvements made by the Unit Owner, should be carried out by the individual purchaser. Each Unit Owner desiring such coverage on his personal effects must purchase his own policy at his own cost and expense. All policies purchased by Unit Owners must contain waivers of subrogation and must contain provisions to the effect that the liability of the carriers issuing insurance procured by the Condominium Board shall not be affected or diminished by reason of the policy or policies carried by Unit Owners.

Painting/Decoration of Common Elements and Units

All painting and decorating of exterior portions of the Building and Common Elements as well as all repairs and replacements to the Common Elements shall be made by the Condominium Board through its officers, its manager or managing agent. No further approval of the Unit Owners shall be required for the foregoing, regardless of the cost, and such costs will be charged to the Unit Owners as Common Charges, except to the extent that the same may be charged to a particular Unit Owner if such costs are necessitated by his negligence or misuse.

Each Unit Owner may decorate the interior of his or her Unit in any manner that he or she desires, subject to compliance with the Condominium's By-Laws and the Rules and Regulations promulgated pursuant thereto and will be solely responsible for the cost and expense of maintaining, repairing, painting and maintaining casualty and liability insurance on his or her Unit.

Appliances

Sponsor is not providing a washer/dryer, blinds, or shades to the Units; it will be the responsibility of each Unit owner to provide them at his or her own cost. The Sponsor will provide hook-ups for a domestic type washer and ventless electric dryer. The Sponsor will provide each Unit with a refrigerator, microwave, dishwasher and stove for each Unit. See Part II, "Description of Property" for further details.

Carbon Monoxide Detectors

The Sponsor is providing combination carbon monoxide/smoke detectors in each Unit at each level in accordance with the Administrative Code of the City of New York. See Part II, "Description of Property" and "Definitions" for further details.

Purchasers for Occupancy or Investments

Since the condominium board does not have the right to approve or disapprove purchasers there is no limit on the number of owners who may purchase for investment rather than for personal occupancy and accordingly there may always be a substantial percentage of owners who are non-residents.

Limitations on Purchase of Units

There are no restrictions on who may purchase a Unit in the Condominium. However, the Sponsor hereby reserves the right at any time for any reason whatsoever to refuse to approve and execute (i) a Purchase Agreement for any Unit, and (ii) a Purchase Agreement or Agreements, as the case may be, for more than one (1) Unit to any one person or entity; provided, however, that neither the Sponsor nor the Selling Agent will discriminate in the sale or lease of Units on the basis of race, creed, sex, color, disability, marital status, sexual orientation, or national origin or other grounds prohibited by law.

Contents of Part II

The agreement to purchase a Unit is called a "Purchase Agreement", the general form of which is set forth in Part II as Document No. 2. The terms of sale of Units, as well as the procedure to purchase the same, are summarized in Section "Procedure to Purchase."

The form of Unit Owner's Power of Attorney that each Unit Owner will be required to give to the Condominium Board and to Sponsor pursuant to Article 14 of the Declaration, set forth as Document No. 6 in Part II of the Plan. The Power of Attorney permits the Condominium Board to file an instrument affecting the condominium with respect to compliance with laws, zoning, easements, etc. For more details, see the form annexed as Document No. 4 in Part II of the Plan. The form of deed that Sponsor will issue to purchasers of Units is set forth as Document No. 5 in Part II.

A detailed description of the physical condition of the Property is set forth in Part II as Document No. 1, entitled "Description of Property", which includes an architect's/engineer's report describing the property, and should be reviewed carefully by prospective purchasers.

Floor plans of the Units are set forth in Part II as part of Document Number 1.

The salient provisions of the Declaration of the Condominium (the "Declaration"), which is the document that establishes condominium ownership of the Property, and the By-Laws of the Condominium (the "By-Laws"), which govern the operation of the Condominium and to which are annexed the Rules and Regulations of the Condominium (the "Rules and Regulations"), are partially summarized in Section "Rights and Obligations of Unit Owners and Condominium Board" and are reproduced in full in Part II as Documents Numbers 6 and 7, respectively. Each Unit owner is obligated to comply with the Declaration, the By-laws, the Rules and Regulations and any other requirement of the Condominium Board.

Parts I and II constitute the entire offering and contain all the detailed terms of the offer and all the material items of the transaction. The exhibits submitted to the Department of Law in connection with the filing of the Plan contain additional supporting documentation. All of these are available for inspection and copying to prospective purchasers and their attorneys during regular business hours at the office of the attorneys for the Sponsor, the office of the selling agent, the office of the Sponsor and the on-site office whenever the on-site office is open. There will be no charge for inspection. However, there will be a charge of forty cents ($0.40) per page for copying. The Plan and exhibits are also available for inspection and copying by appointment (at a current charge of $0.25 per page) at the Department of Law, 28 Liberty Street, 21st Floor, New York, New York 10005. There is a $25.00 deposit required for each copy of the book, which will be refunded if it is returned to the Sponsor in good condition, normal wear and tear excepted.

THE PURCHASE OF A CONDOMINIUM UNIT HAS MANY SIGNIFICANT LEGAL AND FINANCIAL CONSEQUENCES. THE ATTORNEY GENERAL STRONGLY URGES YOU TO READ THIS OFFERING PLAN CAREFULLY AND TO CONSULT WITH AN ATTORNEY BEFORE SIGNING A PURCHASE AGREEMENT.

C. DEFINITIONS

The following words as hereinafter referred to shall be defined as follows:

1. Below Grade: means below first floor or ground floor level.

2. Bulk Sale: shall be the sale of ten (10) Units or 20% or more of the Units in the building, whichever is less, by a single purchaser for investment purposes.

3. Common Charges: Assessments by the Condominium Board of the Condominium upon the Unit Owners, in proportion to their respective interests in the Common Elements for the purpose of paying common Expenses. **NOTE**: These charges are payable by the Unit Owners of its building on a monthly basis.

4. Common Elements: All that part of the Condominium Property or facilities servicing or benefitting all the Units comprising the Condominium, as defined in Section 339-e of the Condominium Act. The Common Elements include generally, and without limitation: (i) all parts of that building (other than the Units in that building) including but not limited to the foundation, roof and supports of the building; and (ii) all areas or facilities for the common use of all the Units of the building and Unit Owners. Common Elements consist of all portions of the Condominium Property which are not designated as Units or parts thereof.

5. Common Expenses: Expenses for which Unit Owners shall be proportionately liable, and includes the actual and estimated expenses of operating the property, assessments relating to repair, maintenance, replacements, management and operation of each individual Condominium, and reasonable reserves for such purposes as found and determined by the Condominium Board, and sums designated as Common Expenses by or pursuant to the Condominium Documents.

6. Common Interest: The proportionate, undivided interest in fee simple absolute in the Common Elements appertaining to each Unit, as expressed in the Declaration of Condominium for that building.

7. The Condominium: The 1296 Park Place Condominium, proposed to be created and organized as provided for in this Offering Plan, consisting of land, building, and appurtenances of the building.

8. Condominium Board: The governing body of the Condominium, being the group selected, authorized and directed to manage and operate the Condominium individually as provided by the New York Condominium Act, the Declaration and the By-Laws. The Condominium Board will manage and operate the building as provided by the New York Condominium Act, the Declaration and the By-Laws.

9. Condominium Documents: This Offering Plan, and the Declaration, Floor Plans, By-Laws and rules and regulations of the Condominium and all Exhibits for the foregoing, as amended from time to time.

10. Consummation of the Plan: means filing the declaration of condominium and the first transfer of title to a condominium Unit to at least one purchaser under the plan following a declaration of effectiveness by the Sponsor and acceptance of the amendment by the Department of Law confirming or declaring that the plan is effective.

11. Contract Date: the date Purchaser's attorney receives a fully executed Purchase Agreement.

12. Declaration: The instruments by which the Building is submitted to the provisions of the New York Condominium Act and that instrument as from time to time amended, consistent with the provisions of the New York Condominium Act and the By-Laws of the Condominium.

13. Downpayment: means the amount deposited by the Purchaser with the escrow agent at the time of the execution of the Purchase Agreement. The amount shall be no greater than 10% of the purchase price for the contracted-for Unit.

14. Equal or Better Quality: means comparable or better quality recognized by industry standards for performance, efficiency, longevity and/ or classifications, as applicable.

15. Financing Contingency Expiration Date: means forty-five (45) days from the Contract Date.

16. First Class Condition: shall mean same as new, excepting normal wear and tear.

17. Floor Plans: shall mean the floor plans of the Units filed in the Register's Office simultaneously with the recording of the Declaration, together with any supplemental floor plans thereto. The Floor Plans shall govern in the event of any inconsistency between the written part of the Declaration and By-Laws and the Floor Plans.

18. "Institutional Lender" means any bank, savings bank, private banker, trust company, savings and loan association, credit union or similar banking institution whether organized under the laws of this state, the United States or any other state, foreign banking corporation licensed by the Superintendent of Banks of New York or regulated by the Comptroller of the Currency to transact business in New York State; insurance company duly organized or licensed to do business in New York State; mortgage banker licensed pursuant to Article 12 D of the Banking Law; and any instrumentality created by the United States or any state with the power to make mortgage loans.

19. Lender: Either of Sponsor's Preferred Mortgagee or Purchaser's Preferred Lender.

20. Limited Common Elements: Limited Common Elements generally are those Common Elements reserved for use and enjoyment by one or more Units. The Limited Common Elements in this Condominium are the Back Yard, Terraces and Vestibule, allocated to the Units as shown on the Floor Plans. See Section "Introduction" for information regarding the Limited Common Elements in this Condominium.

21. Liquidated Damages: shall mean the Downpayment plus any Sponsor expenditures for special work or upgrades to the Unit ordered by Purchaser.

22. Lot Line: shall mean the boundaries of the tax lot as determined by the City of New York Department of Finance, Real Property Assessment Bureau. Lot line windows, if any, are windows located on the edge of the lot, in the event the building is constructed on the lot lines. There are no lot line windows appending to this building.

23. New York Condominium Act: Article 9-B of the Real Property Law of the State of New York, as amended, which sets forth provisions governing the creation and operation of condominiums, and to which the Condominium that is the subject of this Offering Plan, is submitted.

24. Property: The land described in the Declaration (see Document No. 6) which is subject to the Condominium Act by the Declaration, together with all improvements thereon and all easements, rights and appurtenances belonging thereto or intended for the benefit thereof.

25. Purchaser's Preferred Lender: Any Institutional Lender that is not either of Sponsor's Preferred Mortgagee.

26. Sponsor: As used in New York State regulations pertaining to newly constructed and vacant condominium, the word "Sponsor" means "any person, partnership, joint venture, corporation, company, trust, association or other entity or agent thereof who makes or takes part in a public offering or sale in or from the State of New York of participation interests or investments in real estate including condominium interests in realty." The Sponsor of this offering plan is 872 LLC.

27. Sponsor's Preferred Mortgagee: shall mean Shimon Rosenberg, Private Mortgage Banker, New Construction Specialist, Wells Fargo Home Mortgage | 150 E 42nd St New York, NY 10017, Tel 212-214-6711 | Cell 718-564-9068 | Fax 866-943-1195, Email: Shimon.M.Rosenberg@wellsfargo.com.

28. Successor Sponsor: shall refer to a purchaser of Units sufficient to constitute a Bulk Sale. In this plan a Successor Sponsor shall refer to an owner that purchases two (2) or more Units.

29. Unit: Any Unit designated as such in the Declaration of the Condominium and further described in the floor plans to be filed simultaneously with the Declaration.

30. Unit Owner: The person or persons owning a Unit in fee simple absolute.

A complete set of definitions is set forth in Exhibit C to the Declaration of the Condominium set forth in Part II of the plan.

D. DESCRIPTION OF PROPERTY AND IMPROVEMENTS

This description of the property and improvements is intended to provide a general outline of the land, building and Units. A more detailed description of the building and property, including the Engineer's Report and floor plans is set forth in the "Description of Property", Document No. 1 in Part II of the Plan.

The land is known by street address as 1296 Park Place, Brooklyn, New York. The building is located on the southerly side of St. John's Place, distance 240 feet easterly from the corner formed by St. John's Place and Nostrand Avenue. The land is located in an R-6 zone and permits residential use as of right. The Building will remain residential in conformity with its prior use.

There will be one (1) building on the site which is currently being renovated to extend the Building horizontally and vertically and renovate existing spaces in the Building, and when complete will consist of four (4) stories, a cellar and a mezzanine and contain eight (8) residential Units. The building is being renovated pursuant to Quality Housing Regulations, however due to the size of the building no Quality Housing requirements need to be met. The building will not have an elevator. The building was use for residential housing prior to the renovation. See "Schedule A - Offering Prices and Related Information" and the Architect's Report and Floor Plans in Part II of the Plan for further details.

The Common Elements consist of all that part of the Condominium Property or facilities servicing or benefitting all the Units comprising the Condominium, as defined in Section 339-e of the Condominium Act. The Common Elements include generally, and without limitation: (i) all parts of that building (other than the Units in that building) including but not limited to the foundation, roof and supports of the building; and (ii) all areas or facilities for the common use of all the Units of the building and Unit Owners. Common Elements consist of all portions of the Condominium Property which are not designated as Units or parts thereof.

Limited Common Elements generally are those Common Elements reserved for use and enjoyment by one or more Units. The Units will be allocated Limited Common Elements as follows: Unit 1R is allocated the areaway and a portion of the rear yard; Unit 2R is allocated a portion of the rear yard and the stairs; Unit 3R is allocated a balcony; Unit 4F is allocated a terrace and Unit 4R is allocated a balcony. Balconies and terraces are not interpreted to include roof areas, unless a proper walking surface is provided, and the space is indicated as an accessory to residential space in the Certificate of Occupancy. See Schedule A and Part II, "Description of Property" for further details.

Sponsor is not providing a washer/dryer, blinds, or shades to the Units; it will be the responsibility of each Unit owner to provide them at his or her own cost. The Sponsor will provide hook-ups for a domestic type washer and ventless electric dryer. The Sponsor will provide each Unit with a refrigerator, microwave, dishwasher and stove for each Unit. See Part II, "Description of Property" for further details.

The property will be improved, and the Units built in accordance with all applicable zoning and building laws, regulations, codes, and other government requirements. The proposed project

is governed by New York City zoning laws and the Building Code.

The Units and Common Elements will be built in accordance with this Plan and with the Plans and Specifications filed with the Department of Buildings as the same may be amended. The Units, when fully completed, will comply with all applicable rules, regulations, laws and other requirements of all governmental authorities having jurisdiction thereof, including those governing zoning and construction. The Plans and Specifications will be available for inspection at the Sponsor's office on the Property.

The approximate area (within reasonable tolerances) calculates the square footage as the area of each Unit consisting of the area measured horizontally from the outside face of the glass window and/or exterior walls to the centerline of the partitions separating one Unit from another Unit or to the center line of the partitions separating a Unit from corridors, stairs, elevators and other mechanical equipment spaces that are not part of the Unit. Each Unit consists of the area measured vertically from the top of the floor to the underside of the ceiling. The Square footage in the Schedule A is not based upon measurements from interior surfaces or interior walls, and the areas compromising the Units is significantly less than the areas listed in Schedule A. Dimensions shown on the floor plans reflect the approximate interior dimensions of main areas of the Unit.

No Unit Owner shall be deemed to own the structural walls, supporting columns, pipes, wires, conduits or other public lines running through the Unit which are utilized for or serve more than one (1) Unit. Any area or installation which is designated on the Floor Plans as part of a Unit shall be considered as part of said Unit.

The Sponsor reserves the right to amend or modify such plans, specifications and description of property (including changes in area, floor plans and allocation of space, changes in materials, and other construction details) and substitute in place of any materials and other construction details set forth herein or in Document No. 1 in Part II of this Plan, materials and other construction details of Equal or Better Quality; provided that the Sponsor may not change the size, location of buildings or Units, other improvements or common elements if such changes affect the percentage of common interests or materially affect the value of any Unit to which title has closed or for which a purchase agreement has been executed and is in effect unless all affected Unit Owners and contract vendees consent in writing to such change, and provided that the approval of any governmental authority having jurisdiction thereover, if necessary, is first obtained. A decrease in area of 5% or less could be material and trigger a right of rescission. However, there is a rebuttable presumption that an area that is diminished by 5% or less is not material. See Section "Changes in Prices and Units" for further details. All references in this Plan to "Plans and Specifications" shall mean the aforesaid plans and specifications for the Building prepared by the Sponsor's Architects and Engineers as the same may have, from time to time, been amended or changed, or may, from time to time, hereafter be amended or changed in accordance with the provisions of this paragraph.

Water is provided by the City of New York and the Units will be billed together for water consumption as a common charge. Natural gas is provided by National Grid Corporation. Each Unit will be separately metered and billed. Telephone service will be provided by local telephone service providers and each Unit Owner will be billed directly by the provider. Electricity is

provided by the Consolidated Edison Co. Each Unit is metered and billed separately. Storm water is carried into the New York sewer system as is the entire sanitary waste from the building.

Estimate of Completion

The building and Units are presently under renovation. The Sponsor projects that the building and Units will be completed by August 2019. However, Sponsor makes no warranty or guarantee that the building and Units will be completed by said date.

E. LOCATION AND AREA INFORMATION

The following is a general description of the location of the building and the area surrounding the property. Reference should be made to the Architect's Description of Property, reproduced in full as Document Number 1 in Part II of the Plan, for a more detailed description of the Property and its physical condition.

Location

The land is known by street address as 1296 Park Place, Brooklyn, New York. The building is located at a point on the southerly side of Park Place distant 220 feet westerly from the corner formed by the intersection of the southerly side of Park Place with the westerly side of Schenectady Avenue. The land is located in an R-6 zone and permits residential use as of right. The Building is situated in the section of Brooklyn known as Crown Heights.

The primary access roads are Utica Avenue, Nostrand Avenue and Eastern Parkway. The Williamsburg Bridge, Manhattan Bridge, Brooklyn Bridge, the Prospect and Gowanus Expressways, and the Hugh L. Carey Tunnel are closely accessible via the Brooklyn-Queens Expressway which is accessible via Eastern Parkway.

The Condominium is located in a primarily residential neighborhood with convenient residential amenities. The immediate area consists of multi-occupancy housing with elementary schools within walking distance. Located nearby are public, private and parochial schools, religious institutions, synagogues, day care centers and senior citizen centers. The nearest police station is the Brooklyn 71st Precinct, 421 Empire Boulevard, Brooklyn, NY 11225, approximately one (1) of a mile away. The Fire Department has FDNY Engine 280 Ladder 132, 489 St. John's Place, Brooklyn, NY 11238, approximately one and a half miles (1.5) away. The Interfaith Medical Center, 1545 Atlantic Avenue, Brooklyn, NY 11213, approximately four fifths (4/5) of a mile and away.

Many retail facilities such as supermarkets, fruit and vegetable stores, meat and fish stores and bakeries exist on the surrounding streets. Complete shopping needs and services are available nearby. The Condominium is within walking distance of banks, restaurants, a hotel, parks and subway and bus transit. The MTA subway station, Utica Avenue on the 2, 3, 4 and 5 subway lines, is accessible from Eastern Parkway approximately three tenths (3/10) of a mile away. The B45 bus line can be accessed on St. John's Place.

The City of New York provides police, fire, sanitation, snow removal and road maintenance services.

The Sponsor has no knowledge of any publicly announced development projects adjacent to or across from the Condominium. The Sponsor does not have any pending projects in the immediate vicinity of the Condominium. Should any public announcement of any development or project adjacent to or directly across from the property, such project will be disclosed within thirty (30) days after the information becomes known in an amendment to the offering plan.

F. SCHEDULE A
OFFERING PRICES AND RELATED INFORMATION

THE 1296 PARK PLACE CONDOMINIUM

1296 Park Place, Brooklyn, NY 11213

Year Projected to Begin: January 1, 2020- December 31, 2020

Unit No.	Location	Approx. Floor Area	Approx. Outdoor/ Uninhabitable/ Limited Common Floor Area	No. of Bedooms/ Bathrooms	Offering Price	Percent Common Interest	Projected Monthly Common Charges	Projected Real Estate Taxes with 421-a (Monthly)	Projected Real Estate Taxes with 421-a (Annual)	Projected Real Estate Taxes w/o 421-a (Monthly)	Projected Real Estate Taxes w/o 421-a (Annual)	Projected Carrying Charges w/ 421-a (Monthly)	Projected Carrying Charges w/o 421-a (Monthly)
		(1)	(1)	(1)	(2)	(3)	(4)	(5)	(5)	(5)	(5)	(6)	(6)
1F	Cellar First Floor	580* 545		0/1.50	$716,250.00	12.22%	$568.23	$27.85	$334.22	$718.29	$8,619.47	$596.08	$1,286.52
1R	Cellar First Floor	689* 688	173 (AW) 559 (RY)	1/1.50	$825,600.00	17.06%	$793.29	$57.17	$686.00	$1,002.78	$12,033.40	$850.46	$1,796.07
2F	Second Floor	755		1/1	$687,645.00	11.40%	$530.10	$25.98	$311.77	$670.09	$8,041.08	$556.08	$1,200.19
2R	Second Floor	617	697 (RY) 49 (S)	1/1	$560,411.00	11.65%	$541.73	$26.55	$318.58	$684.79	$8,217.42	$568.28	$1,226.52
3F	Third Floor	796		1/1	$722,610.00	11.99%	$557.54	$27.33	$327.91	$704.77	$8,457.24	$584.87	$1,262.31
3R	Third Floor	613	38 (B)	1/1	$555,555.00	9.40%	$437.10	$21.42	$257.03	$552.53	$6,630.36	$458.52	$989.63
4F	Fourth Floor Mezzanine	796 465	334 (T)	3/2	$955,920.00	17.11%	$795.62	$60.08	$721.00	$1,005.72	$12,068.67	$855.70	$1,801.34
4R	Fourth Floor	613	38 (B)	1/1	$555,925.00	9.17%	$426.41	$20.90	$250.85	$539.01	$6,468.13	$447.31	$965.42
Total		7,157	1,888		$5,579,916.00	100.00%	$4,650.02	$267.28	$3,207.36	$5,877.98	$70,535.77	$4,917.30	$10,528.00

8 Residential Units Offered for Sale

Rear Yard (RY); Balcony (B); Areaway (AW); Stairs (S)

Note: Unit 1R is allocated the Areaway and a portion of the Rear Yard as a Limited Common Element. See "Floor Plans".

Note: Unit 2R is allocated aportion of the Rear Yard and the Stairs a Balcony as Limited Common Element. See "Floor Plans."

Note: Units 3R and 4R are each allocated a Balcony as Limited Common Element. See "Floor Plans."

Note: Unit 4F is allocated a Terrace as Limited Common Element. See "Floor Plans".

Note: At closing, each Purchaser shall deposit an Initial Capital Payment equal to two (2) months' estimated monthly common charges for the unit. See Section "Working Capital Fund."

Note: At closing, each Purchaser shall pay an additional $3,500.00 to defray Sponsor's costs of forming the condominium. See Section "Unit Closing Costs and Adjustments."

*Note: Purchasers are advised that the below-grade cellar space, which shall include equipment spaces and accessory space for Unit 1, may not be used for any residential uses including bedroom, dining room or any other use considered to be a habitable space as defined by the New York City Building Code. Any use of the cellar as a living or sleeping space may result in a violation being issued against the Building and/or the imposition of fines against the Building.

G. NOTES TO SCHEDULE A

1. When the Units are completed, the layout and dimensions may be slightly different than the Floor Plans shown in the offering plan. Accordingly, each Unit should be inspected prior to purchase to determine its actual dimensions, layout and physical condition. The areas shown are, within reasonable tolerances, the usable floor spaces of the Units. The number of bedrooms in each Unit is computed in accordance with the standards established by the New York City Building Code. See the "Description of Property" set forth in Part II for a more detailed description of the Units and the rooms, including floor plans of the Units.

   The approximate area (within reasonable tolerances) calculates the square footage as the area of each Unit consisting of the area measured horizontally from the outside face of the glass window and/or exterior walls to the centerline of the partitions separating one Unit from another Unit or to the center line of the partitions separating a Unit from corridors, stairs, elevators and other mechanical equipment spaces that are not part of the Unit. Each Unit consists of the area measured vertically from the top of the floor to the underside of the ceiling. The Square footage in the Schedule A is not based upon measurements from interior surfaces or interior walls, and the areas compromising the Units is significantly less than the areas listed in Schedule A. A decrease in area of 5% or less could be material and trigger a right of rescission. However, there is a rebuttable presumption that an area that is diminished by 5% or less is not material. Dimensions shown on the floor plans reflect the approximate (within reasonable tolerances) interior dimensions of main areas of the Unit. Unless an affected purchaser consents, no material change will be made in Unit size, layout, or percentage of common interest if a purchase agreement has been executed and delivered to the Sponsor for that Unit. Unless all purchasers consent, no material change will be made in the size and no material change will be made in the size and no material adverse change will be made in the quality of common elements. The measurements in the Schedule A are the same as the measurements provided in the Declaration to the condominium, a form of which is attached hereto as Document 6 in Part II of the Offering Plan.

   The cellar, which includes accessory space for Units 1F and 1R and utility rooms for the Building, may not be used for bedrooms, dining rooms, or any other use considered to be a "habitable space" as defined by the New York State Building Code. Additionally, spaces in the cellar may not be rented independently. Rental or use by the owner as living or sleeping quarters may result in an Environmental Control Board (ECB) violation being issued by the New York City Department of Buildings, which would be the responsibility of the Unit owner to cure. Purchasers should note that cellar space has less light and air and is more susceptible to dampness.

2. Prices are negotiable. The Sponsor reserves the right to change the offering prices set forth in Schedule A. These offering prices, however, may only be changed by a duly filed amendment to this Plan when the change in price is an across the board change affecting one or more lines of Units or is to be advertised or is a price increase for an individual purchaser. However, the prices for the Units are negotiable and the Sponsor may enter into an agreement with a purchaser to sell one or more Units at prices lower from those set forth in Schedule A. See Section "Changes in Prices and Units." See Section "Unit Closing Cost and Adjustments" which discloses and explains the closing costs and adjustments that a purchaser will be required to pay.

Sponsor reserves the right to negotiate with purchasers all aspects of the purchase price of the Unit, including but not limited to: renovations or improvements to the apartments or the fixtures or equipment contained therein or credits or allowances therefor; amount of down payment; the terms of financing contingency in the event the Sponsor agrees to permit the same; extension of period to secure financing; default clause; application of the interim lease rental payment towards the purchase price; payment of all or part of purchaser's closing or financing costs such as closing costs, attorneys' fees, origination fees, commitment fees and waiver or reduction of the attorney's fees set forth in the offering plan; and any and all other costs relating to the cost of acquiring title to the Unit. Furthermore, the Sponsor reserves the right to from time to time to add and/or delete negotiable terms, however, any changes to the negotiable terms shall be previously disclosed in an amendment to the plan.

3. In accordance with Section 339-i(1)(iv) of the New York State Condominium Act, the Common Interests of each of the Units have been allocated based upon floor space, subject to the location of such space and the additional factors of relative value to other space in the condominium, the uniqueness of the Unit, the availability of common elements for exclusive or shared use, and the overall dimensions of the particular Unit.

4. Common charges have been estimated by the Sponsor and include fire insurance for the Units and liability insurance for the Common Elements, and maintenance and operation of the Common Elements. Common Charges exclude repair or decoration to the inside of the Units, electricity and gas for each Unit and insurance for personal effects. Common charges have been estimated by the Sponsor based on the estimated operating budgets annexed as Schedule B to this Plan. See Schedule B-1 for individual electricity and gas expenses for the Units.

5. Projects which commenced construction between June 15, 2015, and December 31, 2015 (with the issuance of New Building or Foundation Permits), are eligible to benefit from the 421-a Tax Abatement Program, only if construction will be completed no later than December 31, 2019, with the issuance of a Certificate of Occupancy. Failure to complete the project within the allotted time frame will cause the project to be ineligible for the Final 421-a Tax Abatement benefits.

The total assessed value of the property (i.e., the aggregate assessment of all units) following full completion of construction, is estimated to be $559,275.00, approximately. Using the foregoing assessed value, assuming a Class 2 tax rate of 12.612% (i.e., $12.612 per $100 of assessed value, the final 2018/2019 tax rates), the total real estate tax liabilities due, will be as follows:

Tax liability without 421-a abatement	
Total Assessed Value	$559,275.00
Total tax liability	$70,536.00
Tax liability with 421-a abatement	
Total Assessed Value with Cap	$25,430.00
Total tax liability with 421-a abatement	$3,207.00

Per the amended Rules & Regulations, only a portion of an apartment's billable exempt Assessed Value is now eligible for the 421-a tax exemption. The value of a Unit above this

threshold ("AV cap") is ineligible to receive benefits. For units with an exempt Assessed Value above this Assessed Value cap, owners will pay taxes on the portion of Assessed Value above the cap, but still receive tax benefits on the portion of Assessed Value below the cap. The Assessed Value cap was originally set at $65,000 per Unit, however the amount has been increased by 3%, compounded annually, on each taxable status date following August 17, 2008, the first anniversary of the effective date of the State Law. As of tax year 2019/2020 the Assessed Value cap rate is $89,975. Unit 1R and Unit 4F are both above the Assessed Value cap rate.

Estimated real estate tax assessments are determined using various factors including sales price, square footage, location of the Unit, availability of limited common elements and/or access to common elements based on the Sponsor's expert's opinion letter of Metropolitan Realty Exemptions, Inc. 118 Middleton Street, Brooklyn, NY 11206. No assurances can be given that the taxing authorities will assess the building and allocate the assessments in the same manner and the actual assessments may not be in the same proportion as the common interests set forth in Schedule A. See section "Real Estate Taxes" for further details.

Purchasers should note that the IRS allows homeowners to make the following deductions on their federal income tax returns: Any amount spent on property taxes, state and local income taxes up to cumulative amount of $10,000.00; All mortgage interest paid on mortgages valued at less than $750,000.00 for not more than two homes. Please see Section "Counsel's Income Tax Opinion" for a discussion regarding the income tax deductibility of real estate taxes.

Since no mortgage financing is offered by Sponsor, the only deductible item is real estate taxes. If a Purchaser obtains a mortgage loan, interest on such loan is deductible under current law. The projected amount deductible may vary in future years due to changes in the assessed value, the tax rate or in the method of assessing real property which result in a change in real property taxes, or due to changes in interest rates or in the allocation of constant debt service payments to interest and principal, or such other changes as may reasonably be expected to affect deductions.

THE ABOVE IS NOT INTENDED TO BE A COMPLETE DISCUSSION OF ALL LIMITATIONS IMPOSED BY THE CODE, PARTICULARLY FOR INVESTORS. ALL PURCHASERS ARE ADVISED TO SEEK ADVICE FROM THEIR TAX CONSULTANTS CONCERNING TAX CONSEQUENCES OF THE PURCHASE OF A UNIT IN A CONDOMINIUM.

6. All projected total carrying charges are for the projected first year of operation beginning January 1, 2020. **NOTE**: Sponsor has not obtained, nor is it offering, permanent financing commitments to purchasers. Therefore, if a purchaser obtains financing, debt service on such financing will be a monthly expense additional to the total charge listed. In addition, prospective purchasers will be required to pay at closing, among other things: (i) two (2) months' common charges to be used as working capital; (ii) New York City and State transfer taxes; (iii) $3,500.00 to defray Sponsor's costs of creating the condominium. See section entitled "Closing Costs and Adjustments" below.

H. SCHEDULE B

BUDGET OF CONDOMINIUM OPERATION

THE 1296 PARK PLACE CONDOMINIUM

YEAR PROJECTED: JANUARY 1, 2020 – DECEMBER 31, 2020

INCOME:

Common Charges:	**$55,800.00**

EXPENSES:

Janitorial Services/Labor (1):	$0.00
Management (2):	$24,600.00
Heating, Cooling and Hot Water (3):	$0.00
Electricity (4):	$2,335.77
Water & Sewer (5):	$6,382.23
Repairs, Services & Supplies (6):	$4,000.00
Insurance (7):	$4,800.00
Audit Fees (8):	$1,400.00
Legal Fees (8):	$2,000.00
Building Phone Line (9):	$900.00
Fire Alarming Monitoring (10):	$1,800.00
Contingency (11):	$2,000.00
Reserve Fund (12):	$5,582.00
Total:	**$55,800.00**

In the event that the actual or anticipated date of commencement of condominium operation differs from the budget year projected herein by more than six (6) months from the anticipated date of the closing of the first Unit, this plan will be amended to include a revised budget which will disclose new projection. If such new projections exceed the projections contained herein by twenty-five percent (25%) or more, the Sponsor will offer all purchasers the right for fifteen (15) days following the presentation of such amendment within which to rescind their offer to purchase and have their down payments refunded.

H1. NOTES TO SCHEDULE B

1. Labor Salaries and Wages, Payroll Taxes and Benefits, Superintendent

The Managing Agent will take responsibility for the hiring of a part-time superintendent that will be employed to ensure the upkeep of the building. There will be a janitorial service available 24 hours per day. The superintendent will not be a union member and will be an employee of the Managing Agent. The salary for the superintendent will be paid out by the Managing Agent. The level of staffing comports with applicable housing and labor laws. The superintendent will not live on premises.

2. Management

The building will be managed by Tri-State Property Management Group ("Managing Agent") for the first year of condominium operation, for a fee of $24,600.00, which shall include the cost of the part-time superintendent and a janitorial service approved by the Department of Buildings available 24 hours per day. Tri-State Property Management Group is affiliated with the Sponsor. After the first year, the fee charged may be higher and the Unit owners may choose to enter into a contract with an independent managing agent. In the event that an outside managing agent is retained, the common charges may need to be increased. During the interim control period, Unit owners will not have discretion to elect another managing agent.

In the event the Unit Owners chooses to manage the Condominium themselves, the Condominium Board shall bear the responsibility to assure that all assessments have been paid, that each Unit Owner adheres to the rules and regulations of the Declaration & By-Laws and to collect any amounts payable to the Condominium. For further discussion, see the By-Laws and the Addendum to By-Laws in Part II of the Offering Plan

3. Heating

Each Unit will be individually heated and cooled. No common heating and cooling will be provided. Hot water will be provided to each Unit individually. Budgets for individual Unit heating, cooling and hot water costs are set forth in Schedule B-1 and are included in the electricity estimates for the individual Units. There is no gas in the building.

4. Electricity

This item includes the cost of electricity for lighting the common areas. This is based upon a survey and estimate by Ronald B. Cagan, P.E., 1701 Elm Avenue, Brooklyn, NY 11230:

Estimated usage in KwH:	7,078
Cost per KwH:	$0.30
Total:	$2,123.40
Estimated total annual cost with 10% increase:	**$2,335.77**

The cost of electricity to the Units is separately metered and the charges therefor will be paid directly to the utility company by Unit Owners. A projection is set forth in Schedule B-1,

inclusive of consumption, rates, sales tax and a reasonable anticipated increase due to inflation.

5. Water and Sewer

The building will be metered for water and sewer usage by the City of New York Department of Environmental Protection in accordance with current law. The amount budgeted for this item is $6,382.23 which is based on estimated daily usage of 1,200 gallons of water for the building and converted to cubic feet (CF) by dividing by 7.45. The estimate is provided by Ronald B. Cagan, P.E., 1701 Elm Avenue, Brooklyn, NY 11230.

	Estimated Consumption		
Estimated Daily Usage		=	161.07 CF
Estimated Annual Usage		=	58,790.55 CF
Converted to 100 CF (HCF)	44,095.65 / 100	=	587.90 HCF

	Estimated Water & Sewer Rates		
Water Charge:		=	$3.81/HCF
Sewer Charge:	159% of water charge	=	$6.06/HCF

	Usage		**Rate per HCF**		**Cost**
Water Charges:	587.90 HCF	x	$3.81/HCF	=	$2,239.90
Sewer Charges:	587.90 HCF	x	$6.06/HCF	=	$3,562.67
Total:					$5,802.57

Estimated Charges (Including 10% Inflation):	**$6,382.23**

6. Repairs and Maintenance; Services and Supplies

The projected amount does not include repairs, painting, maintenance, or supplies for the interior of the Units, all of which are the responsibility of the individual Unit Owners.

The budgeted figure is based upon an estimation by King David International Realty, 616 Williamsburg Station, Brooklyn, New York 11211, and includes repairs to the interior of the building, the roof, the exterior of the Building (including walls, foundations, windows, doors, and locks), the plumbing and electrical systems, and electric costs, and includes various supplies (such as cleaning supplies and materials, lubricants, bulbs, public fixtures, general and hardware supplies), painting of common areas and maintenance of parking areas (if any). In addition, no funds are being provided for future capital improvements other than those included in the budget. At the present time there are no maintenance contracts. However, if any services are needed, the Contingency Fund may be used.

The following is a breakdown of the repairs and maintenance:

Exterminating	$500.00
Plumbing	$500.00
Electrical	$500.00
Services & Supplies	$2,500.00
TOTAL:	**$4,000.00**

No service contracts will be in effect as of the closing.

7. Insurance

The following insurance is available for the Property for the first year of condominium operations as set forth in a letter, dated May 3, 2019, from Cortland Insurance Agency, Inc., a licensed insurance broker with an address at Brooklyn, NY 11230:

Items Covered	**Coverage Limits**
Building	$1,500,000.00 All Risk, 100% Replacement Cost No Co-Insurance
Deductible:	$2,500.00
General Liability	$1,000.000.00 Each Occurrence $2,000,000.00 Aggregate
Officers and Directors Liability	Included
Projected Annual Premium	**$4,800.00**

Coverage for the following items is not included and may be available at extra cost: rent insurance; water damage; excess liability; auto liability; fidelity bond; and garage keeper's liability.

The coverage limits for the building are based upon the current replacement cost for the Building (excluding excavation and foundation) estimated by a licensed insurance broker, which, in his opinion is adequate so that the insured shall not be a co-insurer. The following items are not included in the budget and may be available at extra cost; excess liability coverage of $1,000,000.00 is available for $1,800.00 per year and Worker's Compensation for a part time employee (if applicable) is available for approximately $2,000.00 per year. In order to safeguard the investment of its Unit Owners in the event of a substantial or total destruction of the Building, the Condominium Board should periodically review the amount of casualty insurance for the Building to ensure that the amount of coverage equals the Building's then replacement cost. The insurance coverage will meet the requirements of the Sponsor or any mortgage lender procured by the Sponsor.

The fire, casualty and general liability insurance will be on terms that provide: (1) that each Unit Owner is an insured party; (2) that there will be no cancellation without notice to the Condominium Board and the Unit Owners; (3) a waiver of subrogation; (4) a waiver of invalidity because of the acts of the insured and Unit Owners; and (5) a waiver of pro rata reduction if Unit Owners obtain additional coverage. The condominium will have public liability insurance at closing.

This coverage does not include claims for personal injury or property damage resulting from occurrences in a Unit, nor does it include coverage of the furniture or personal property of Unit Owners. Therefore, each Unit Owner should consider the desirability of obtaining additional insurance at his or her own cost covering among other items (i) fire or casualty losses to the contents of his or her Unit and any replacements, additions, upgraded fixtures and improvements therein, (ii) personal property, and (iii) liability for personal injury as a result of occurrences in the individual Unit. In the event of a loss, the claim is made payable to the named insured (the

Condominium Board). In the event of any uncovered claim or damage the Board may need to assess a special assessment to the Unit owners to be able to pay for the claim and or damage.

8. Legal Fees and Audit Fees

A portion ($1,400.00) of the budgeted item will be used for auditing fees in connection with the preparation of the first year's audited financial statements of the Condominium and its Federal, State and City income tax returns. The estimate for accounting fees is based on a letter from Mozes Guttman CPA, 2 Skillman Street, Ste 217, Brooklyn, NY 11205. An allowance ($2,000.00) is provided for miscellaneous (but not major) legal services, such as but not limited to, hiring an attorney to attend Unit Owner meetings and Board Member elections, in the event the Condominium Board decides to engage an attorney. No attorney has been retained at this time.

9. Building Phone Line

This item includes the cost of a dedicated phone line for the use of the building in case of emergency. Service to be provided by local telephone service provider.

10. Fire Alarm Monitoring

The budgeted item is for monthly monitoring service for the fire alarm which includes as part of its system, a required dedicated phone line which was installed in the equipment room.

11. Contingency Fund

This item is to provide a fund for possible increases in one or more items of operating expense above the amounts projected or for unanticipated expenses. The budget may be modified from time to time prior to the commencement of, or during, condominium operation to add new items of expense or to increase one or more items of operating expense. The funds for such modifications may be provided by decreasing this budget item or by decreasing one or more items of expense, or both.

12. Reserve Fund

This item is to be used as a yearly reserve fund to be set aside and used for periodic major capital repairs or replacements, or necessary repairs of common elements. The basis of the figure projected for this item is approximately ten percent (10%) of the entire budget. At this time the Sponsor has no knowledge of any capital improvements that may have to be made during the first five years of condominium operation.

In the opinion of King David International Realty with an address at 616 Williamsburg Station, Brooklyn, NY 11211, a licensed real estate manager, the projected receipts are adequate to meet the estimated expenses for the Condominium Board' first year of operation, assuming such first year to be the fiscal year commencing January 1, 2020. The foregoing schedule, however, is not intended and should not be taken as a guarantee by anyone that the annual Common Charges or expenses for the first year or any subsequent year of operation of the building by the Condominium Board will be as set forth in said schedule and it is likely that the actual annual Common Charges or expenses will vary from the actual amounts shown in the schedule. The

amounts shown are the Sponsor's projection of what the Common Charges will be during the first year of condo operations.

The Sponsor has reserved the right to modify, renew and replace existing service, maintenance, employment concessionaire and other agreements and insurance policies, and to enter into new agreements and policies that will be binding on the Condominium Board on the closing date. Any such new agreement which has the effect of materially increasing Common Charges or is binding on the condominium board for more than two years will be disclosed by a duly filed amendment to this plan.

In the event that the actual or anticipated date of commencement of condominium operation differs from the budget year projected herein by more than six (6) months from the anticipated date of the closing of the first Unit, this plan will be amended to include a revised budget which will disclose new projection. If such new projections exceed the projections contained herein by twenty-five percent (25%) or more, the sponsor will offer all purchasers the right for not less than fifteen (15) days following the presentation of such amendment to rescind their offer to purchase and have their Downpayment refunded.

In the event that the actual or anticipated date of commencement of condominium operation is delayed by twelve (12) months or more from the anticipated date of closing, the sponsor will amend the plan to offer all purchasers the right for not less than fifteen (15) days following the presentation of such amendment to rescind their offer to purchase and to have their Downpayment refunded. If such right to rescind is exercised, the Downpayment will be refunded within ten (10) days of the sponsor's receipt of the notice of rescission.

The Sponsor anticipates that the first closing of a Unit will occur by January 1, 2020. Purchasers will be offered a right of rescission if: (i) the actual date of closing of title to the first unit; or (ii) the projected date of closing of title to the first Unit occurs later than September 30, 2020, twelve months after the projected date for the first closing. If the Plan is amended to provide for a later projected date for the first closing, purchasers who enter into purchase agreements after the amendment is accepted for filing will be entitled to an offer of rescission if the first closing occurs more than 12 months beyond that amended, later date.

However, if the first closing occurs on or before January 1, 2020, the Sponsor may schedule the closings of title to other Units significantly later than such date. Unless your Purchase Agreement contains an outside closing date, the Sponsor is not obligated to schedule your closing within any specified time frame or to ensure that closing of title to your closing within any specified time frame or to ensure that closing of title to your Unit will occur by any date certain. PROSPECTIVE PURCHASERS SHOULD THEREFORE CAREFULLY CONSIDER SUCH RISKS IN THEIR DETERMINATION AS TO WHETHER TO PURCHASE A UNIT.

I. SCHEDULE B-1
ENERGY COSTS FOR UNITS DURING FIRST YEAR OF CONDOMINIUM OPERATION OF THE 1296 PARK PLACE CONDOMINIUM
1296 PARK PLACE BROOKLYN, NEW YORK
FOR THE YEAR: JANUARY 1, 2020- DECEMBER 31, 2020

Unit	Estimated Yearly Electric Usage (KwH)	Cost Per KwH	Estimated Electric Cost (Mo.)	Estimated Electric Cost (Yr.)
1F	12,598	$0.30	$371.00	$4,457.00
1R	14,568	$0.30	$426.00	$5,107.00
2F	9,903	$0.30	$297.00	$3,568.00
2R	8,868	$0.30	$269.00	$3,226.00
3F	10,210	$0.30	$306.00	$3,669.00
3R	8,838	$0.30	$268.00	$3,217.00
4F	13,818	$0.30	$405.00	$4,860.00
4R	8,838	$0.30	$268.00	$3,217.00
TOTAL	**32,900**		**$2,595.00**	**$31,141.00**

This estimate includes the following:

- **Hot water:** Hot water is based on normal estimated usage for a family of 5.
- **Home heating**: The home heating estimate is based on maintaining a 70 degree temperature for 16 hours a day and a 60 degree temperature for 8 hours as the night temperature.
- **Clothes Dryer:** Clothes drying estimate for approximately 30 loads a month.
- **Cooking**: Cooking estimate is based on an average of 60 minutes of cooking per day.

NOTES TO SCHEDULE B-1

1. Each Unit Owner will be responsible for the cost of natural gas and electricity service supplied to his Unit. The building contains gas and electric meters for each of the Units and one electric meter for the common areas (common electric charges are set forth in Schedule B). Charges for each Unit will be payable directly to the utility company. Electric usage and costs include central or individual air conditioning and heating for each Unit.

2. The above information is based upon a survey and estimate provided by Ronald B. Cagan, P.E., 1701 Elm Avenue, Brooklyn, NY 11230. The building uses electricity for all power needs. Usage and costs vary based on location and area of the Units. For example, the yearly electricity costs for Unit 2F are estimated based on current Con Edison rates of $0.30 per KWH and projected usage of 9,903 KWH per year, for approximately $1,848.00 including a 10% increase. The figures for the other Units have been calculated accordingly.

3. The estimated costs are subject to change based on changes in the electric and gas companies' delivery rates.

ALTHOUGH SPONSOR BELIEVES THAT THE FOREGOING IS ACCURATE, NO WARRANTY OR GUARANTY IS BEING MADE BY SPONSOR, MANAGING AGENT, OR ANY OTHER PERSON OR ENTITY AS TO WHAT THE SEPARATELY METERED GAS AND ELECTRICITY COSTS MAY BE.

King David international Realty
Licensed Real Estate Broker
616 Williamsburg Station
Brooklyn, N.Y. 11211
Tel. (718) 486-2444 Fax. (718) 889-2185

5/20/19

COMPLIANCE WITH REAL PROPERTY LAW SECTION 339-i (1) (iv)

RE: 1296 Park Place, Brooklyn, New York

Dear Sirs:

You have requested an opinion from us with regards to your allocation of common interest to units in your proposed condominium 1296 Park Place, Brooklyn, New York, with Section 339-i (1) (iv) of the New York Real Property Law. You have informed us that common interest is allocated based on floor space, subject to the location of such space and the additional factors of relative value to other space in the Condominium, the uniqueness of the Unit, the availability of Common Elements for shared or exclusive use, and the overall dimensions of the particular Unit. Based on our review of the foregoing factors, we have concluded that the proposed allocation of common interest to individual units is in compliance with Section 339-i (l) (iv) of the New York Real Property Law.

I have been a licensed real estate broker for in excess of Five years and have managed approximately Ten buildings in this area with extensive experience in the sale, management, and rental of cooperative and condominium units in Kings County. We have previously participated in the preparation of individual unit value appraisals for the purpose of inclusion in offering plans for the sales thereof. We are not, in any way, associated with you or any other participant in the project, and have no beneficial interest in your business, or in profitability of the project. This is an opinion only as to the relative value of each unit in relation to the value of the project as a whole; is strictly based on the information provided to us in such reasonable inquiries as to the validity thereof as we deemed appropriate under the circumstances; and, is not intended as a guarantee of the actual value of any individual unit. We consent to the inclusion of this letter in your offering plan.

Sincerely

GIORGIO MAYER
Licensed Real Estate Broker

K. CHANGES IN PRICES AND UNITS

Changes in Purchase Price

The Sponsor reserves the right at any time and from time to time prior and subsequent to the date of transfer of title to the first Unit, to increase or decrease the amount of the purchase price of one or more Units from the amounts shown in the Section entitled "Schedule A--Offering Prices and Related Information."

The offering prices set forth in Schedule A of the offering plan may be changed only by a duly filed amendment to the Plan when the change in price is: (i) an across-the-board increase or decrease affecting one (1) or more lines of Units or Unit models; (ii) is to be advertised; (iii) is a price increase for an individual purchaser. However, the prices for the Units are negotiable and the Sponsor may enter into an agreement with a purchaser to sell one or more Units at prices lower from those set forth in Schedule A.

No change will be made in the size or number of Units and/or their respective percentages of common interest, and no material change will be made in the size or quality of common elements, except by amendment to the plan, and, when applicable, to the Declaration. A decrease in area of 5% or less could be material and trigger a right of rescission. However, there is a rebuttable presumption that an area that is diminished by 5% or less is not material.

Unless an affected purchaser consents, no material change will be made in Unit size, layout, or percentage of common interest if a purchase agreement has been executed and delivered to the Sponsor for that Unit. Unless all purchasers consent, no material change will be made in the size and no material change will be made in the size and no material adverse change will be made in the quality of common elements.

In the event of a change in the purchase price of one or more Units, the purchaser of a Unit may pay or have paid more or less than other purchasers of comparable Units having the same Common Interest. However, such change shall not affect the Common Charges or Common Interest of any Unit (including Units whose purchase prices have changed), nor affect the purchase price stated in any Purchase Agreement then in effect.

Changes in Size, Layout and Number of Units

In order to meet the possible varying demands for number and type of Units, or to meet the particular needs of prospective purchasers, or for any other reason, Sponsor reserves the right to change: (a) the layout of, or number of rooms in, Unsold Units and (b) the size and/or number of Unsold Units by subdividing one or more Unsold Units into two or more separate Units, by combining two or more separate Unsold Units into one or more Unsold Units, by altering the boundary walls of any Unsold Unit(s), or otherwise, including, without limitation, the use of any portion(s) of the Common Elements adjacent to such Unsold Units to the extent that such portion(s) are not required to be maintained as Common Elements pursuant to the terms of the By-Laws. Subject to the terms of this section, such right may be exercised by Sponsor from time to time, both before and after the First Closing, and without the consent or approval of the Selling Agent, the Managing Agent, the Condominium Board, any Unit Owner, or any mortgagee, so long as such changes do not compromise the structural integrity of the building. However, Sponsor shall first

obtain the approval of all governmental authorities having jurisdiction thereof whose approval is required by law. In addition, there may be no change in the number of Units at any time without an amendment to the offering plan.

No change may be made in the number of Units or number of rooms within a Unit, nor may the size of any Unit be changed by subdivision or combination or alteration of boundary walls as aforesaid, or otherwise, nor may the Common Interest of any Unit be changed, unless reflected in a duly recorded amendment to the Offering Plan and the Declaration. As more particularly provided in the Declaration, Sponsor or its designee, as the Owner of an Unsold Units, will have the right itself to so amend the Declaration to effectuate such change, without the Condominium Board, the other Unit Owners, or any mortgagee consenting to, or executing, such amendment. However, no change of a Unit's Common Interest will be made without obtaining the prior consent of all affected Unit Owners. In addition, no change will be made in the Unit size, layout or Common Interest of any Unit for which a Purchase Agreement is in effect, without obtaining the prior written consent of the Purchaser thereof. Additionally, no material change will be made in the size or layout and no material adverse change will be made in the quality of the Common Elements unless all purchasers who have signed Purchase Agreements have consented thereto. Therefore, Sponsor must first obtain consent of all purchasers who have signed Purchase Agreements before amending the Declaration to reflect such change.

L. INTERIM LEASES TO PURCHASERS

All Units will be delivered vacant by the Sponsor unless the purchaser has entered into an interim lease. No purchaser shall have the right to occupy the Unit purchased by him prior to the closing unless Sponsor-Seller agrees to permit such occupancy under an interim lease or other written rental agreement. The purchaser may not occupy the Unit or perform any work in the Unit prior to closing without the prior consent of the Sponsor. Such event shall constitute a default under the terms of the Purchase Agreement. In the event Purchaser enters into an Interim Lease and Purchaser defaults on the Purchase Agreement and fails to close, and after notice form Sponsor to vacate Purchaser fails to vacate, Purchaser will pay Sponsor $250.00 per day for each day he remains in possession beyond the 30th day following mailing of the Notice to Vacate. See Section "Procedure to Purchase" and the general form of lease as set forth as Document No. 10 in Part II of the Plan for further details.

These Units are not subject to rent stabilization or rent protection laws. The lease shall be prepared substantially in accordance with Document No.10 in Part II of the plan. The term of such lease shall be subject to negotiation. No Units will be leased before consummation of the plan unless it is an interim lease in combination with a purchase agreement.

If Sponsor-Seller elects to lease a contracted-for Unit, the lease will be for such rent and other terms as may be mutually agreed upon. Such lease will also provide that an uncured default by the purchaser under his Purchase Agreement will constitute a default under the lease entitling the landlord (i.e., Sponsor-Seller), at its sole option, to immediately terminate such lease. The Purchase Agreement contains a similar cross-default provision entitling the Sponsor to cancel the Purchase Agreement in the event the purchaser fails to cure a default under his lease within the applicable grace period (if any) and purchaser has vacated the contracted-for Unit. Before the Sponsor may utilize the default under the lease to declare a default under the purchase agreement, the Sponsor must either obtain an order of eviction or other judgment or order from a court or agency of competent jurisdiction against the lessee unless the lessee has vacated the Unit. The interim lessee will have thirty (30) days to vacate the contracted-for Unit after a default under the Purchase Agreement or in the event the lessee rescinds the Purchase Agreement.

Prior to the first closing, the entire building will be insured by the Sponsor; after the first closing, the entire building will be insured by the condominium. A person in possession who is not an owner cannot insure the Unit since he or she has no ownership interest, and the Unit cannot be doubly insured. Therefore, a purchaser who takes possession of the contracted-for-Unit prior to closing assumes the risk of losses not covered by insurance; if the Unit is damaged prior to closing the purchaser in possession's failure to make repairs will not excuse them from paying the balance of the purchase price and accepting delivery of the deed for the contracted-for Unit.

M. PROCEDURE TO PURCHASE

A person desiring to purchase a Unit will be required to execute, in triplicate, a Purchase Agreement in the form set forth as Number 2 in Part II of the Plan. Purchaser must deliver all of the above documents to the Selling Agent, together with a check for the down payment payable to the order of "The Law Office of Jay Lichtman, P.C. as Escrow Agent." The down payment shall be 10% of the purchase price and is subject to negotiation; however, in no event shall the down payment be less than $5,000.00. The Purchase Agreement contains the terms and conditions upon which the Unit will be sold and should be read carefully by the prospective Purchaser and his or her legal or financial representative before being executed.

A purchaser seeking financing will be responsible for all fees and costs imposed by the lender, including (but not limited to) appraisal and origination fees (if any). It is possible that a purchaser's financing commitment may expire prior to the Closing and purchaser will incur additional costs.

Purchasers shall have at least three (3) business days to review the Plan and all filed amendments prior to executing a Purchase Agreement.

A Purchase Agreement submitted by any prospective purchaser will not be binding on the Sponsor until a fully executed duplicate original of such Purchase Agreement is returned to such prospective purchaser. Within twenty (20) days after the purchaser delivers an executed Purchase Agreement together with the required deposit, the Sponsor will either accept the Purchase Agreement and return a fully executed counterpart to the purchaser, or if not returned within such time, the Purchase Agreement will be deemed rejected and all monies submitted with such Purchase Agreement will be promptly returned to such prospective purchaser, with interest, if any. Sponsor may reject any Purchase Agreement without cause or explanation so long as such rejection is not based upon race, creed, color, national origin, ancestry, sex, or any other ground prohibited by law.

Notice of Closing

After the Plan is declared effective, Sponsor will give each Purchaser not less than thirty (30) days' prior written notice of the date, time and place (in The City of New York) for the transfer of title to his or her Unit TIME OF THE ESSENCE. Such notice will be served in compliance with Section 20.1(d)(1) no less than thirty (30) days before the date set for the closing of the Units. Purchaser at his option may waive this thirty (30) day notice provision as provided for in the Purchase Agreement.

At title closing, such Purchaser shall pay the balance of the Purchase Price stated in the Purchase Agreement by his or her unendorsed certified personal check or by official cashier's check drawn on a New York bank, a member of the New York Clearing House Association, and execute a Unit Owner's Power of Attorney to the Condominium Board which provides for the Condominium Board to acquire a Unit from an individual Unit owner if such owner sells the Unit to the Condominium Board. Paying the balance of the Purchase Price and returning the Unit Owners Power of Attorney are conditions precedent to closing and must be completed at or before the closing in order to close on a Unit.

The Sponsor anticipates that the first closing of a Unit will occur by January 1, 2020. Purchasers will be offered a right of rescission if: (i) the actual date of closing of title to the first unit; or (ii) the projected date of closing of title to the first Unit occurs later than December 31, 2020, twelve months after the projected date for the first closing. If the Plan is amended to provide for a later projected date for the first closing, purchasers who enter into purchase agreements after the amendment is accepted for filing will be entitled to an offer of rescission if the first closing occurs more than 12 months beyond that amended, later date.

However, if the first closing occurs before January 1, 2021, the Sponsor may schedule the closings of title to other Units significantly later than such date. Unless your Purchase Agreement contains an outside closing date, the Sponsor is not obligated to schedule your closing within any specified time frame or to ensure that closing of title to your closing within any specified time frame or to ensure that closing of title to your Unit will occur by any date certain. PROSPECTIVE PURCHASERS SHOULD THEREFORE CAREFULLY CONSIDER SUCH RISKS IN THEIR DETERMINATION AS TO WHETHER TO PURCHASE A UNIT.

Terms of Purchase Agreement

The following is a summary of certain material provisions of the Purchase Agreement but is not intended as a complete statement of these or other important provisions of the same. Reference should be made to the form of Purchase Agreement set forth as Document No. 2 of the Plan for the complete terms of these and other material provisions:

(a) Incorporation of the Plan. The Plan (including, without limitation, the Condominium Documents contained in Part II of the Plan) and any amendments thereto duly filed by Sponsor are incorporated into each Purchase Agreement by reference. The execution and submission of a Purchase Agreement constitutes Purchaser's acceptance of the Plan (Parts I and II) and his or her agreement to abide and be bound by the terms of the same, as well as all amendments to the Plan duly filed by Sponsor. No Purchaser shall have the right to approve or consent to any amendments duly filed before Purchaser entered into a Purchase Agreement, including, without limitation, any changes, modifications, or updating of the estimated Common Charges or estimated real estate taxes and assessments to be paid by the Purchaser on Schedule B -- "Budget for First Year of Condominium Operation" and no amendments duly filed before Purchaser entered into a Purchase Agreement will excuse a purchaser from performing his or her obligations under a Purchase Agreement or entitle such purchaser to any credit or offset against the purchase price set forth therein, except as provided for under applicable law. However, if an amendment materially adversely affects the rights, obligations, or liabilities of then existing Purchasers, Purchasers will be given the right to rescind their Purchase Agreements by notifying Sponsor within thirty (30) days of presentation of amendments duly filed before Purchaser entered into a Purchase Agreement and will receive a refund of their Down Payments, without interest (unless interest is earned), within ten (10) days after Sponsor's receipt of Purchaser's election to rescind.

(b) Funds. All funds received from prospective purchasers by the Sponsor will be handled in accordance with the provisions of Sections 352-h and 352-e(2)(b) of the General Business Law and Section 71-a(3)(a) of the Lien Law and shall be used by the Sponsor only in connection with the consummation of the Plan. Section 71-a(3) of the Lien Law requires, at the purchaser's option, that the deposit funds be placed in an escrow account in a bank trust company,

savings bank, or state or federal savings and loan association located in New York State. Said monies must be deposited within five (5) business days of the Sponsor's receiving them. The Sponsor must advise the purchaser in writing within ten (10) business days after the deposit has been made of the name of the depository where the funds have been placed.

All funds received by the Sponsor for upgrades or extras must initially be placed in the escrow account. However, purchasers should note as a special risk that such funds may be released from the escrow account by the escrow agent as long as the Sponsor uses the funds for such upgrades or extras. As a result, in the event a purchaser is entitled to rescission, the purchaser will not receive a refund of any funds used for upgrades or extras, unless said Purchase Agreement is cancelled as a result of the Sponsor abandoning the Plan.

(c) Financing Contingency: The obligations of a purchaser under a Purchase Agreement are not conditioned on obtaining financing. Any prospective purchaser who executes a Purchase Agreement and does not obtain financing may lose his or her deposit if he or she is unable to otherwise raise the monies for the balance of the purchase price. Prospective purchasers who require financing are advised to consult with a lending institution before execution of a Purchase Agreement. No representation is made by the Sponsor as to the availability or cost of such financing. The Sponsor may in its sole discretion consent to a Financing Contingency Rider attached hereto in Part II of the Offering Plan Document No. 2 Exhibit B.

Purchasers should note that in the current market, banks and other lenders are imposing various restrictions on purchase financing. Such restrictions include requiring that a certain percentage of apartments in a building or group of buildings be sold before a lender will consider making a loan. Thus, it may be possible for a Purchaser to experience difficulty obtaining a loan in a building or group of buildings where the Sponsor or holder of unsold shares has not sold a substantial percentage of the apartments in the building or group of buildings, which in some cases may be as high as 70%. Moreover, some lenders will not provide financing in a building or group of buildings where an investor other than the original Sponsor has an ownership interest of 10% or more. It may also be difficult for a Purchaser to resell an apartment if prospective buyers are unable to obtain a loan due to the same minimum sales and investor ownership restrictions.

The Sponsor's Preferred Mortgagee, Shimon Rosenberg, Private Mortgage Banker, New Construction Specialist, Wells Fargo Home Mortgage | 150 E 42nd St New York, NY 10017, Tel 212-214-6711 | Cell 718-564-9068 | Fax 866-943-1195, Email: Shimon.M.Rosenberg@wellsfargo.com, requires that at least 30% percent of the units be sold and at least 30% percent of the units be owner-occupied before it will close a loan. As the closing of the purchaser's is contingent upon the satisfaction of this condition, it is a special risk that even if a purchaser obtains and satisfies all conditions of the financing commitment applicable to the purchaser, the closing of the loan may be delayed or may not occur if the minimum sales and owner-occupancy requirements are not satisfied, If the Sponsor's Preferred Mortgagee does not close a purchaser's loan for this reason, the Sponsor shall grant to such purchaser a right of rescission and a reasonable period of time to exercise such right.

The Condominium declaration and by-laws contain provisions typically required by Freddie Mac, Fannie Mae and FHA loan requirements (i.e. reserve fund, mortgagee consent rights).

In the event that Sponsor consents to financing, a Financing Contingency Rider, attached to the Purchase Agreement, must be executed by both parties. The following are the terms of the Financing Contingency Rider:

1. The obligations of Purchaser hereunder are conditioned upon issuance on a date which is on or before the Financing Contingency Expiration Date, of a written commitment from any Lender pursuant to which such Lender agrees to make a first mortgage loan to Purchaser, at Purchaser's sole cost and expense, of an amount equal to 75% of the purchase price or such lesser sum as Purchaser shall be willing to accept, at prevailing interest rates for a term of at least thirty (30) years and on other customary commitment terms, whether or not conditional upon any factors other than an appraisal satisfactory to the Lender.

2. Within two (2) weeks of the Contract Date, Purchaser must make a mortgage application to a Lender. Within seven (7) days thereafter, the Purchaser must provide the Seller and/or Seller's attorney with the name and address of the Lender to which the application has been made. Failure to send such notice will be considered to be a waiver of the Financing Contingency Rider. Purchaser shall authorize the Lender to talk directly to Seller's attorney regarding the status of the mortgage application. Purchaser shall (a) furnish accurate and complete information regarding Purchaser and members of Purchaser's family, as required, (b) pay all fees, points and charges required in connection with such application and loan, including (but not limited to) appraisal and origination fees (if any), (c) pursue such application with diligence, and (d) cooperate in good faith with such Lender to obtain such commitment. Purchaser shall comply with all requirements of such commitment (or of any other commitment accepted by Purchaser) and shall furnish Seller with a copy thereof promptly after receipt thereof.

3. If Purchaser only applies to Purchaser's Preferred Lender and a commitment is not issued or a rejection is received, Purchaser shall within five (5) days of the Financing Contingency Expiration Date or rejection date, notify the Seller of the failure to receive a commitment or of the rejection. At such time, the Seller may, at its option, within fifteen (15) days of receiving notice from Purchaser, cause the Purchaser to submit an application together with the required fees to said Preferred Mortgagee, and Purchaser shall be required to accept the commitment if issued by Sponsor's Preferred Mortgagee under the same terms and conditions as stated above. Purchaser shall have forty-five (45) days from the date Seller caused the Purchaser to submit an application together with the required fees to said Preferred Mortgagee (the "2nd Financing Contingency Expiration Date") to obtain a mortgage commitment from said Preferred Mortgagee. If such Preferred Mortgagee issues a commitment, the terms of such commitment being substantially similar to the terms originally sought by the Purchaser, Purchaser must close with said commitment. Purchaser is required to pay all applicable fees in connection with the mortgage application with the Preferred Mortgagee. If Seller fails to cause Purchaser to make such application to Sponsor's Preferred Mortgagee within fifteen (15) days of receiving notice from Purchaser of the failure to receive a commitment or of the rejection, or if the Preferred Mortgagee failed to provide a commitment by the 2nd Financing Contingency Expiration Date, or denied the Purchaser's mortgage application, Purchaser may cancel this contract by giving notice to Seller within five (5) days of Financing Contingency Expiration Date or the 2nd Financing Contingency Expiration Date (as applicable), in which case this contract shall be deemed cancelled and thereafter neither party shall have any further rights

against, or obligations or liabilities to, the other by reason of this contract and the down payment shall be promptly refunded to Purchaser.

4. If Purchaser applied to Purchaser's Preferred Lender and one of Sponsor's Preferred Mortgagee and fails to receive a commitment or receives a rejection from Purchaser's Preferred Lender but received a commitment at prevailing rates from Sponsor's Preferred Mortgagee, Purchaser must close with Sponsor's Preferred Mortgagee. If Purchaser applied to Purchaser's Preferred Lender and one of Sponsor's Preferred Mortgagee and either a commitment is not issued or a rejection is received from both, Purchaser shall within five (5) days of the Financing Contingency Expiration Date or rejection date, notify the Seller of the failure to receive a commitment or of the rejection, in which case this contract shall be deemed cancelled and thereafter neither party shall have any further rights against, or obligations or liabilities to, the other by reason of this contract and the down payment shall be promptly refunded to Purchaser.

5. If Purchaser fails to give notice of cancellation, then Purchaser shall be deemed to have waived Purchaser's right to cancel this contract and to receive a refund of the down payment by reason of the contingency contained in the Financing Contingency Rider and the mortgage contingency will no longer apply. In addition, if Purchaser fails to notify Seller within fifty (50) days of the Contract Date that he has received a commitment, Seller may at its option cancel the contract and thereafter neither party shall have any further rights against or obligations or liabilities to, the other by reason of this contract, and upon cancellation the down payment shall be promptly refunded to Purchaser.

Provided that the Sponsor consents to permit a financing contingency in accordance with the above terms and the Purchaser complies with all of such terms, if the commitment lapses or expires prior to closing and Purchaser has made a good faith effort to extend the commitment, the Sponsor will grant Purchaser a right of rescission and ten (10) days after expiration to exercise such right. If Sponsor does grant Purchaser a financing contingency, and the commitment is not fulfilled through no fault of the Purchaser, under New York law performance is excused. If Purchaser acts in good faith and lender revokes the commitment after the contingency period expires, performance is excused.

Purchaser should note that even if a mortgage commitment is secured, said mortgage commitment may expire or change prior to the actual closing. Any risks related to the expiration or change to the mortgage commitment shall be borne by the Purchaser, if Purchaser is at fault.

In accordance with the Financing Contingency Rider, Purchaser will have the right to terminate the Purchase Agreement and be refunded all monies deposited thereunder, without interest, in the event:

(i) A Lender fails, through no fault of the Purchaser, to issue its commitment on the terms described above by the Financing Contingency Expiration Date or the 2nd Financing Contingency Expiration Date (as applicable), or such greater period as the Sponsor may permit in Sponsor's sole discretion, provided the Purchaser gives notice of termination not later than five (5) days after the expiration of the aforementioned dates; or

(ii) the commitment issued by the Lender is not funded by the closing through no fault of the Purchaser, provided the Purchaser gives notice of termination no later than ten (10)

days before the closing, provided the lender has given Purchaser more than ten (10) days' notice.

In the event Purchaser fails to exercise the right of termination within time periods set forth above or has failed to satisfy the conditions set forth in the Financing Contingency Rider, then, in either case, the Purchase Agreement shall remain in full force and effect.

(d) Escrow and Trust Fund Requirements

The Escrow Agent:

The Law office of Jay Lichtman, P.C., with an address at 68 Jay Street, Suite 420, Brooklyn, NY 11201, telephone number 347-504-1724, shall serve as escrow agent ("Escrow Agent") for Sponsor and Purchaser. Escrow Agent has designated Jay Lichtman to serve as signatory for the escrow account. The designated signatory is admitted to practice law in the State of New York. Neither the Escrow Agent nor the authorized signatory on the account are the Sponsor, Selling Agent, Managing Agent, or any principal thereof, or have any beneficial interest in any of the foregoing.

The Escrow Account:

The Escrow Agent has established the escrow account at Chase Bank. N.A., located at 136 Front Street, Brooklyn, NY 11201 ("Bank"), a bank authorized to do business in the State of New York. The escrow account is entitled "Law Office of Jay Lichtman, P.C. Attorney Escrow Account" ("Escrow Account"). The Escrow Account is federally insured by the FDIC at the maximum amount of $250,000 per deposit. Any deposit in excess of $250,000 will not be insured. If purchasers have accounts at the same bank that holds escrowed funds, purchaser's funds at the escrow bank factor into the $250,000 insurance limit.

All Deposits received by Purchaser shall be in the form of checks, money orders, wire transfers, or other instruments, and shall be made payable to or endorsed by the Purchaser to the order of Law Office of Jay Lichtman, P.C., as Attorney.

Any Deposits made for upgrades, extras, or custom work shall be initially deposited into the Escrow Account and released in accordance to the terms of the Purchase Agreement.

The Escrow Account is an IOLA account with no interest accrued to the benefit of the either the Sponsor or the purchaser. An IOLA account is a special segregated escrow account maintained by an attorney in which the interest earned is paid to the State of New York. It is not anticipated that any interest will be earned thereon. If at some future point, the Offering Plan is amended to provide that the account will be a non-IOLA account, then the interest rate for all deposits made into the Escrow Account shall be the prevailing rate for such accounts. Interest shall begin to accrue upon placing the deposit into the Escrow Account. All interest earned thereon shall be paid to or credited to the Purchaser at closing. No fees of any kind may be deducted from the Escrow Account, and the Sponsor shall bear all costs associated with the maintenance of the Escrow Account.

The escrow agent shall maintain all records concerning the escrow account for seven years

after release of the funds. Upon the dissolution of any law firm which was the escrow agent, the former partners or members of the firm shall make appropriate arrangements for the maintenance of these records by one of them or by the successor firm and shall notify the Department of Law of such transfer.

Sponsor agrees to defend, indemnify, and hold Escrow Agent harmless from and against all costs, claims, expenses, and damages incurred in connection with or arising out of this Agreement or the performance or non-performance of Escrow Agent's duties under this Agreement, except with respect to actions or omissions taken or suffered by Escrow Agent in bad faith or in willful disregard of this Agreement or involving gross negligence of Escrow Agent. This indemnity includes, without limitation, disbursements and attorneys' fees either paid to retain attorneys or representing the hourly billing rates with respect to legal services rendered by Escrow Agent to itself.

The Purchase Agreement:

The Purchase Agreement is attached hereto as Document No. 2 Part II of the Plan. The relevant escrow trust fund provisions are included in Section 5 of the Purchase Agreement, which must be executed by the Escrow Agent.

Notification to Purchaser:

Within five (5) business days after the Purchase Agreement has been tendered to Escrow Agent along with the Deposit, the Escrow Agent shall sign the Purchase Agreement and place the Deposit into the Escrow Account. With ten (10) business days of the placing the deposit in the Escrow Account, Escrow Agent shall provide written notice to Purchaser and Sponsor, conforming the Deposit. The notice shall provide the account number and the initial interest rate to be earned on the Deposit. Any Deposits made for upgrades, extras, or custom work shall be initially deposited into the Escrow Account, and released in accordance to the terms of the Purchase Agreement,

The Escrow Agent is obligated to send notice to the Purchaser once the Deposit is placed in the Escrow Account. If the Purchaser does not receive notice of such deposit within fifteen (15) business days after tender of the Deposit, he or she may cancel the Purchase Agreement within ninety (90) days after tender of the Purchase Agreement and Deposit to Escrow Agent. Complaints concerning the failure to honor such cancellation requests may be referred to the New York State Department of Law, Real Estate Finance Bureau, 28 Liberty Street, 21st Floor, New York, NY 10005. Rescission shall not be afforded where proof satisfactory to the Attorney General is submitted establishing that the Deposit was timely placed in the Escrow Account in accordance with the New York State Department of Law's regulations concerning Deposits and requisite notice was timely mailed to the Purchaser.

Escrow Agent will be compensated by the Sponsor for acting as such. Escrow Agent shall have a fiduciary duty to the depositor of the funds, which is the Purchaser.

Additionally, Escrow Agent or any member of its firm shall be permitted to act as counsel for Seller in any dispute as to the disbursement of the Down payment or any other dispute between the parties whether or not Escrow Agent is in possession of the Downpayment and continues to act as Escrow Agent.

Before funds are transferred to a new escrow account or if the escrow agent is replaced, the plan must be amended to provide the same full disclosure with respect to the new account, the escrow agent and the escrow agreement as was originally provided.

Release of Funds:

All Deposits, except for advances made for upgrades, extras, or custom work received in connection with the Purchase Agreement, are and shall continue to be the Purchaser's money until employed in connection with the consummation of the transaction, and may not be comingled with any other money or pledged or hypothecated by Sponsor, as per GBL § 352-h. Such funds shall not be a part of the estate of the Sponsor or the escrow agent upon any bankruptcy, incapacity or death.

Under no circumstances shall Sponsor seek or accept release of the Deposit of a defaulting Purchaser until after consummation of the Plan, as evidenced by the acceptance of an effectiveness amendment by the New York State Department of Law. Consummation of the Plan does not relieve the Sponsor of its obligations pursuant to GBL §§ 352-3(2-b) and 352-h.

The Escrow Agent shall release the Deposit if so directed: (a) pursuant to terms and conditions set forth in the Purchase Agreement upon closing of title to the Unit; or (b) in a subsequent writing signed by both Sponsor and Purchaser; or (c) by a final, non-appealable order or judgment of a court.

If the Escrow Agent is not directed to release the Deposit pursuant to (a) through (c) in the above paragraph, and the Escrow Agent receives a request by either party to release the Deposit, then the Escrow Agent must give both the Purchaser and Sponsor prior written notice of not fewer than thirty (30) days before releasing the Deposit. If the Escrow Agent has not received notice of objection to the release of the Deposit prior to the expiration of the thirty (30) day period, the Deposit shall be released, and the Escrow Agent shall provide further written notice to both parties informing them of said release. If the Escrow Agent receives a written notice from either party objecting to the release of the Deposit within said thirty (30) day period, the Escrow Agent shall continue to hold the Deposit until otherwise directed pursuant to (a) through (c) in the above paragraph. Notwithstanding the foregoing, the Escrow Agent shall have the right at any time to deposit the Deposit contained in the Escrow Account with the clerk of the county where the Unit is located and shall give written notice to both parties of such deposit.

The Sponsor shall not object to the release of the Deposit to: (a) a Purchaser who timely rescinds in accordance with an offer of rescission contained in the Plan or an Amendment to the Plan; or (b) all Purchasers after an Amendment abandoning the Plan is accepted for filing by the Department of Law.

The Department of Law may perform random reviews and audits of any records involving the Escrow Account to determine compliance with all applicable statutes and regulations.

Waiver Void:

Any provision of any Purchase Agreement or separate agreement, whether oral or in writing, by which a Purchaser purports to waive or indemnify any obligation of the Escrow Agent

holding any Deposit in trust is absolutely void. The provisions of the Attorney General's regulations and GBL §§ 352-e(2-b) and 352-h concerning escrow trust funds shall prevail over any conflicting or inconsistent provisions in the Purchase Agreement, Plan, or any amendment thereto.

The Sponsor will comply with the escrow and trust fund requirements of General Business Law Sections 352-e(2-b) and 352-h and the Attorney General's regulations promulgated pursuant thereto.

(e) Events of Default. In the event that a Purchaser (i) defaults in paying the balance of the Purchase Price on the date scheduled by Sponsor for closing title to his or her Unit; or (ii) defaults in performing some other obligation under the Purchase Agreement and fails to cure such default within thirty (30) days after Sponsor sends written notice to such Purchaser specifying the nature of the default, then Sponsor's remedy shall be the cancellation of the Purchase Agreement and the retention of the Liquidated Damages. Sponsor must provide (30) day written notice to Purchaser of the cancellation of the Purchase Agreement and the retention of the Liquidated Damages. If such Purchaser shall fail to cure such default or fails to send written notice of objection to the release of the Downpayment within the said thirty (30) day period, TIME IS OF THE ESSENCE, Sponsor may retain Liquidated Damages. The Sponsor may not retain more than 10% of the purchase price (regardless of the amount deposited with the Escrow Agent) plus any amounts paid for any special work or extras. Any payments received by Sponsor in excess of the Downpayment plus the actual cost incurred by Sponsor for any special work or upgrades together with any interest earned on such excess payments, if any, shall be refunded to the Purchaser with fifteen (15) days after cancellation. The Sponsor may not seek specific performance of the Purchase Agreement.

In the event a purchaser does not close on the Closing Date set forth in the Notice of Closing and the Sponsor elects not to cancel the Purchase Agreement or if the Sponsor approves the Purchaser's request to adjourn the Purchaser's closing to his apartment, interest shall accrue on the unpaid amount of the purchase price from the Closing Date or adjourned closing date until such amount is paid. The interest rate shall be ten percent (10%) per annum calculated at a daily rate of approximately 0.0277%. This rate shall be in effect for as long as there are any unpaid amounts owing towards the full purchase price. The interest rate charged will not exceed New York State usury charges.

If a Purchaser-in-contract is or becomes a tenant under an interim lease and fails to pay rent or otherwise to comply with his or her lease obligations or vacates or abandons his or her contracted-for Unit, then Sponsor may cancel his or her Purchase Agreement as set forth above whether or not such Purchaser-in-contract is evicted from the Building by reason thereof. Before the Sponsor may utilize the default under the lease to declare a default under the purchase agreement, the Sponsor must either obtain an order of eviction or other judgment or order from a court or agency of competent jurisdiction against the lessee unless the lessee has vacated the contracted-for Unit. However, if such Purchaser-in-contract is not evicted from the Building by reason of such default, vacating or abandonment, Sponsor shall return to such Purchaser-in-contract all monies deposited under the Purchase Agreement, together with the interest earned thereon, if any. See Section "Interim Leases."

The purchaser may not occupy the Unit or perform any work in the Unit prior to closing

without the prior consent of the Sponsor. In the event the purchaser occupies the Unit or performs any work in the Unit prior to closing without the prior consent of the Sponsor, such event shall constitute a default under this section.

In the event that a Purchase Agreement is cancelled, both the Sponsor and the Purchaser shall be relieved of all further obligations and liabilities thereunder and under the Plan, and the Sponsor shall be free to sell the Unit to another as though such Purchase Agreement had never been made and without accounting to the Purchaser for the proceeds received on such sale.

(f) Fixtures and Appliances. The Sponsor is providing hookups for a washer and ventless electric dryer, and providing a refrigerator, dishwasher and oven, accordingly, the Units will be prepared so that a temporary Certificate of Occupancy may be issued prior to closing. The Sponsor is not providing laundry appliances, blinds or shades to the Units. It will be the responsibility of each Unit owner to provide them, at his or her own cost. Furniture, wall coverings, furnishings, decorations and the like in or about any model are not included in the sale. There will be no modifications or extras unless agreed to in writing by the parties.

(g) Fee to The Law Office of Jay Lichtman, P.C. Purchaser shall be obligated to pay a fee of (i) $2,500.00 to the law firm of Sponsor's attorney for services rendered in connection with recording the Declaration of Condominium and the preparation of documents (ii) $350.00 if the closing is held at any location other than Sponsor's attorney's office at the request of the purchaser (iii) $350.00 payable to Sponsor's attorney if Purchaser applies for and closes with a mortgage; (iv) $250.00 payable to Sponsor's attorney for preparing e-forms for New York City Real Property Transfer Tax are prepared by Sponsor's attorney; and (v) $350.00 for each time the closing is rescheduled at the request of the purchaser (for the costs to fix a new Closing Date and time, to coordinate the attendance of all persons, to re-date the closing documents and to recalculate the closing apportionments).

(h) Closing of Title. The closing of title to each Unit will be held at the office of the Sponsor's attorney, on such date and at such hour as the Sponsor shall designate to the Purchaser of such Unit on not less than thirty (30) days' prior written notice. The Purchaser may waive this notice provision. Sponsor has the right to postpone the closing date and to fix a new closing date within a reasonable time period. In such event, Sponsor shall give the Purchaser not less than ten (10) days' notice of the new date and time of closing. The closing shall take place only after or concurrently with the occurrence of the events set forth in Section "Unit Closing Costs and Adjustments". Purchasers desiring to arrange for such closing to take place at another location in New York City should promptly notify Counsel for Sponsor of that address and, in addition, will be responsible for the payment of an attendance fee to such Counsel (See Section "Unit Closing Costs and Adjustments").

The foregoing shall not act to extend Sponsor's time to declare the Plan effective as set forth in the Section entitled "Effective Date" and shall not affect the Sponsor's right to abandon or withdraw the Plan as set forth in such section. In the event that the Plan is so abandoned or withdrawn, the Purchase Agreement will be deemed cancelled and all monies paid by the Purchaser thereunder, together with interest earned thereon, if any, shall be disbursed as discussed in the subsection entitled "Trust Funds" of the Plan. After the funds are so disbursed, neither the Purchaser nor Sponsor shall have any claims against each other or against the Selling Agent in connection with the Purchase Agreement or the Plan, and all of the same shall be released and

discharged from all liabilities under the Purchase Agreement and the Plan.

(i) Broker. The Purchaser will represent to Sponsor that he or she has not dealt with any broker other than the Selling Agent in connection with the acquisition of his or her Unit and will indemnify the Sponsor against the claims of any other broker, if such broker is not disclosed to the Sponsor at the time of the contract.

(j) No Lien. Neither the Purchase Agreement nor any monies deposited thereunder shall constitute a lien against the Property, including the Unit.

(k) Survival of Obligations. All representations set forth in the Offering Plan, all obligations pursuant to the GBL, and such additional obligations under the Offering Plan which are to be performed subsequent to the Closing Date shall survive delivery of the deed. However, no provisions of the Purchase Agreement shall survive the delivery of the deed, except those obligations expressly stated therein or to be performed subsequent to the closing.

(l) DAMAGE TO UNITS. THE SPONSOR PRIOR TO ANY UNIT CLOSING AND THE CONDOMINIUM BOARD AFTER THE FIRST UNIT CLOSES SHALL RETAIN RISK OF LOSS TO THE BUILDING FROM FIRE OR OTHER CASUALTY. THE SPONSOR SHALL RETAIN THE RISK OF LOSS TO THE UNIT FROM FIRE AND OTHER CASUALTY UNTIL THE PURCHASER-IN-CONTRACT SHALL BE CONVEYED LEGAL TITLE OR UNTIL THE PURCHASER-IN-CONTRACT OCCUPIES THE CONTRACTED-FOR UNIT AND ASSUMES RISK OF LOSS FROM THE SPONSOR. UNIT OWNERS SHOULD OBTAIN THE FOLLOWING AT THEIR OWN COST: HOMEOWNER'S INSURANCE INCLUDING COVERAGE FOR THE CONTENTS OF THE UNIT, PERSONAL PROPERTY, AND LIABILITY FOR PERSONAL INJURY AS A RESULT OF OCCURRENCES IN THE INDIVIDUAL UNIT.

A person in possession who is not an owner cannot insure the Unit since he or she has no ownership interest, and the Unit cannot be doubly insured. Therefore, a purchaser who takes possession of the contracted-for-Unit prior to closing assumes the risk of losses not covered by insurance; if the Unit is damaged prior to closing the purchaser in possession's failure to make repairs will not excuse them from paying the balance of the purchase price and accepting delivery of the deed for the contracted-for Unit.

(m) Purchaser's Remedy. In the event that the Sponsor shall for any reason (except for willful default) be unable to convey and deliver the Units in accordance with the terms of the Purchase Agreement, (except for any failure to perform any obligation imposed by applicable statute or regulation, or a failure to perform his obligations under the offering plan) the sole remedy of the purchaser shall be to rescind the Purchase Agreement and be refunded the entire down payment with interest plus the cost of title searches, if any, and any monies which have been paid to Sponsor for Unit upgrades, if any.

Except as set forth in paragraph (l) above, all other risk of loss or damage prior to Closing is assumed by Sponsor, but Sponsor shall not be obligated or liable to repair the damage. The Sponsor will make a determination whether or not to repair damages within fifteen (15) days. If Sponsor or (in the event the Declaration is filed) the Unit Owners do not elect to repair the damage, the Purchase Agreement will be cancelled and be of no further force or effect. Thereafter, the

purchaser will be refunded all purchase monies paid to Sponsor with any interest earned thereon. If Sponsor elects to repair or replace the loss or damage, the Purchase Agreement shall continue in full force and effect; Purchaser shall not have the right to reject title to the Unit or to receive a credit against, or abatement in, the purchase price; Sponsor shall be entitled to a reasonable period of time to complete such repairs or replacement; and purchaser shall not be required to pay the balance of the purchase price unless and until (i) the Unit has been repaired in compliance with the offering plan and the repairs done with equal quality or in better condition than immediately prior to the casualty, (ii) its essential services (such as gas, electricity, and heat) and a reasonable means of ingress and egress to the street have been restored and (iii) any condition in the Unit for which a violation (if any) is noted or issued has been corrected, other than those that are the obligations of the tenant to cure or that are caused by the act or omission of the tenant. Subsequent to closing, Sponsor will remove all violations of record it is obligated to correct.

The Purchase Agreement is not assignable without the consent of the Sponsor. Sponsor may not withhold permission for assignment of the Purchase Agreement based upon race, creed, color, national origin, sex, age, disability, marital status or other grounds prohibited by law.

If there is any conflict between the Plan and the Purchase Agreement, it will be resolved in favor of the Plan. The Purchase Agreement does not contain, nor will it be modified to contain a provision waiving a purchaser's rights or abrogating Sponsor's obligations under the Offering Plan or under Article 23-A of the General Business Law.

(n) Sponsor Fee: At closing, each purchaser shall pay to the Sponsor the sum of $3,500.00 to defray the Sponsor's costs of creating the condominium, e.g., architectural costs, filing fees, legal fees and other costs incurred in creating the condominium.

N. ASSIGNMENT OF PURCHASE AGREEMENT

A Purchase Agreement may be assigned one time only by the Purchaser thereunder upon payment of a fee of $500.00 to Sponsor's counsel and execution of all assignment documents prepared by such counsel. If a Purchaser desires to take title in the name of an entity to, or controlled by the Purchaser that differs from the name on the Purchase Agreement, or to add, delete, or substitute the name of a member of Purchaser's family, then, if such alteration, addition, deletion, or substitution is permitted by Sponsor (in Sponsor's sole discretion), the Purchaser will be required to deliver to the Selling Agent or Sponsor's counsel, four (4) signed assignments of the Purchase Agreement (in form and content acceptable to Sponsor, in its sole discretion), as well as three (3) completed and signed copies of either Form W-9 (Request for Taxpayer Identification Number and Certification) or Form W-8 (Certificate of Foreign Status), as applicable, must be delivered to the Selling Agent or Sponsor's counsel, together with a personal certified check, or an official bank or cashier's check, in the amount of $500.00 made payable to Sponsor's counsel (for services rendered in connection with the assignment), not less than twenty (20) days prior to the date scheduled for Purchaser's closing. In no event will the Purchaser have the right to postpone the closing as a result of such change in name or assignment. Sponsor is not obligated to consent to any such assignment, and, if Sponsor refuses to consent, the Purchaser will not be excused from his or her obligations under the Purchase Agreement. Sponsor may not withhold permission for assignment of the Purchase Agreement based upon race, creed, color, national origin, sex, age, disability, marital status or other grounds prohibited by law.

O. EFFECTIVE DATE

The offer to sell the Units under this Plan is contingent upon the Plan's being declared effective in accordance with the provisions set forth below.

1. The Plan may be declared effective by personal service of the notice of effectiveness on every purchaser or by commencement of service of the notice by mail addressed to the offeree at the last known residence of such offeree and submitting an amendment to the Department of Law within five (5) days confirming that the plan was declared effective on a specified date. The first closing shall not occur until the plan is declared effective and the effectiveness amendment is accepted for filing by the Department of Law. Notwithstanding that some of the purchasers used to declare the plan effective may not actually close, Sponsor will re-declare the plan effective if all purchase agreements are either rescinded or terminated prior to the date of the first Unit closing, regardless of whether the condominium declaration has not been recorded.

2. The Plan may not be declared effective unless bona fide purchasers, including investors, have signed purchase agreements for at least fifteen percent (15%) of the residential Units offered under the Plan. In this Offering, the Sponsor may declare effective by selling two (2) residential Units, which is twenty-five (25%) of the residential Units being offered.

3. The Plan will not be declared effective based on Purchase Agreements:

   (a) signed by purchasers who have been granted a right of rescission that has not yet expired or been waived; or

   (b) if the purchaser did not have three (3) business days to review the offering plan and all filed amendments prior to executing a purchase agreement; or

   (c) with any purchaser who is the Sponsor, the Selling Agent, or the managing agent, or is a principal of the Sponsor, the Selling Agent, or the managing agent, or is related to the Sponsor, the Selling Agent or the managing agent or any principal of the Sponsor, the Selling Agent or the Managing Agent by blood, marriage or adoption or as a business associate, an employee, a shareholder or a limited partner; except that such a purchaser, other than a Sponsor or a principal of the Sponsor, may be included in the count if the Sponsor has submitted proof satisfactory to the Department of Law establishing that such purchaser is bona fide.

4. The Plan must be declared effective when Purchase Agreements have been accepted by Sponsor for 80% of the residential Units offered under the Plan. In this Offering, the Sponsor must declare effective when accepting purchase agreements for five (5) residential Units, which eighty three percent (83%).

5. The Sponsor may, at its option, declare the Plan abandoned for any reason whatsoever before it is declared effective. If the offering plan is to be abandoned after filing and the Sponsor has accepted purchase agreements, the Sponsor shall promptly submit an amendment to the Office of the Attorney General together with form RS-3 as promulgated by the Office of the Attorney General. If payments under the purchase agreements have been received, Sponsor shall refund them in full, with interest earned, if any, within five (5) days after abandonment via overnight

mail. If there are no outstanding purchase agreements the Sponsor need not submit an amendment but shall submit a form RS-3 to the Office of the Attorney General which shall be served simultaneously by the Sponsor on all commercial or professional tenants, if any, in the manner specified by Section 20.1(d)(1). If the offering plan is to be abandoned after filing and the Sponsor has accepted purchase agreements, all purchasers will be so notified in writing, and the Sponsor shall promptly within fifteen (15) days of abandonment submit an amendment to the Office of the Attorney General together with form RS-3 as promulgated by the Office of the Attorney General. If payments under purchase agreements have been received, Sponsor shall refund them in full, with interest earned, if any, within five (5) days after the amendment for abandoning the plan has been accepted for filing via overnight mail.

6. Sponsor may not abandon the plan after effectiveness for any reason other than (a) a defect in title which cannot be cured without litigation or cannot be cured for less than one-half of one percent of the total offering amount, or (b) substantial damage or destruction of the building by fire or other casualty which cannot be cured for less than one-half of one percent of the total offering amount, or (c) the taking of any material portion of the Property in condemnation proceedings or by eminent domain. Any amount relied upon as a basis for abandonment after effectiveness excludes attorney fees or any such title defects or determinations of any authority or regulatory association which exist on the date of presentation of the plan and are either known to the Sponsor or are a matter of public record.

Subsequent to the First Closing, this Plan may not be withdrawn or abandoned unless at least eighty percent (80%) of the Unit Owners vote to terminate the Condominium (five (5) Units). See Section "Rights and Obligations of Unit Owners" for further discussion.

After this Plan has been declared effective, Sponsor will, from time to time, fix one or more dates for closing title to Units for which Purchase Agreements are in effect. The Sponsor anticipates that the first closing of a Unit will occur by January 1, 2020.

P. TERMS OF SALE

1. Deed and State of Title. Upon delivery to Sponsor of: (i) the balance of the Purchase Price, (ii) a Unit Owner's Power of Attorney in favor of the Condominium Board and Sponsor and (iii) a transferee affidavit or a transfer tax return in the form required to be filed with The City of New York, each of which must be executed and acknowledged by the Purchaser, the Sponsor will execute, acknowledge and deliver to the Purchaser a Bargain and Sale Deed with covenant against grantor's acts, conveying title to such Unit and its appurtenant interest in the common elements to Purchaser free and clear of all liens, encumbrances and title exceptions subject only to the title conditions set forth in Exhibit A to the Purchase Agreement. Title exceptions may include the state of facts shown on a stated survey and any additional state of facts a subsequent survey would show, provided that such additional state of facts does not render title unmarketable. The Unit Owner's Power of Attorney and Deed will be substantially in the forms set forth in Documents No. 4 and No. 5 in Part II of the Plan.

2. At any time after the execution of a purchase agreement, the Sponsor may give the Purchaser thirty (30) days' Notice of Closing. The thirty-day notice may not be served until a temporary or permanent certificate of occupancy has been issued and the Plan has been declared effective. The actual closing of title to each Unit shall take place only after, or concurrently with, the latest of the following events to occur:

   (i) issuance of a temporary or permanent certificate of occupancy for the Property or a temporary or permanent certificate of occupancy covering the Unit being purchased.

   (ii) the Plan has been declared effective and an effectiveness amendment has been accepted for filing by the Department of Law;

   (iii)the recording or filing, as required by law, of the Declaration, the By-Laws and the Floor Plans and such other documents as may be required by law; The Declaration of Condominium, By-Laws and floor plans for the condominium and such other documents as required by law, will be recorded or filed in accordance with the New York Condominium Act or applicable state and local law in the Office of the City Register of the County in which the Condominium is located.

   (iv)the existing mortgagee at the time of the conveyance of the first Unit and at the time of the conveyance of each Unit will either: consent to the formation of a condominium and acknowledge that its lien will be limited to unsold condominium units; subordinate the lien of its mortgage to the declaration of condominium; or release its lien on the condominium Unit being conveyed and its interest in the common elements;

   (v) The Sponsor has secured construction financing with Sharestates Investments, LLC, with an address at 11 Middle Neck Road, Suite 314, Great Neck, NY 11021. Sponsor believes said financing will be sufficient to complete construction of the Building. The minimum release price of the Units is eighty (80%) of the net sale price for each Unit. There is no restriction by the lender as to the number of Units that must be in contract for the lien on a Unit to be released. It will be the discretion of the lender whether to allow the Units to be converted to rental apartments.

(vi) if the purchaser of such Unit so requests, the issuance of a title insurance binder insuring fee title to such Unit in the purchaser, at purchaser's expense, subject only to the encumbrances set forth in such purchaser's Purchase Agreement (all other liens will be removed or insured against enforcement or collection out of the Unit by Purchaser's title company prior to or at closing), which binder will also insure that a valid condominium has been created pursuant to the terms of the Condominium Act. (See Section "Unit Closing Costs and Adjustments" for an estimate of the cost to the purchaser to obtain such title insurance);

(vii) purchaser being given the opportunity to inspect such Unit and other portions of the Property subject to the Declaration;

(viii) the assignment by Sponsor of any manufacturers' warranties with respect to equipment and appliances in the Unit to the Unit Owner and with respect to the equipment and appliances in the General Common Elements or Limited Common Elements, to the Condominium Board.

3. Title to each Residential Unit and its Common Interest will be conveyed at the closing of title to such Residential Unit free and clear of all liens, encumbrances, and title exceptions other than those described in the proposed Unit Deed, if any, and the title exceptions and other matters set forth below and in Schedule A of the Purchase Agreement (collectively the "Permitted Encumbrances"):

(i) Building restrictions and zoning laws and other regulations, resolutions and ordinances and any amendments thereto now or hereafter adopted by any governmental or quasi-governmental authority having jurisdiction.

(ii) Title exceptions may include the state of facts shown on a stated survey and any additional state of facts a subsequent survey would show, provided that such additional state of facts does not render title unmarketable.

(iii) Zoning regulations, ordinances, building restrictions and regulations;

(iv) Consents by Sponsor or any former owner of the Property for the erection of any structure or structures on, under or above any street or streets that the Property may abut;

(v) Encroachments of the Building, walls, stoops, steps, balconies, ornamental columns, windows, door caps, keystones, ledges, pilasters, coping, trim and cornices, and any other part thereof, if any, upon any street or highway or upon any adjoining property and similar encroachments upon the Property;

(vi) Sewer, water, electric, plumbing, heating, gas, telephone and other utility easements and consents, if any, then or thereafter recorded, including the right to maintain and operate lines, wires, cables, amplifiers, transformers, pipes, conduits, poles, meters and distribution boxes in, over, under and upon the Property and the Building;

(vii) The lien of any mortgage, lien or other encumbrance granted, created, or obtained by the Purchaser;

(viii) Easements for ingress and egress for construction, installation, operation and maintenance of municipal service facilities and utilities. Any easement or right of use in favor of handicapped persons or any easement or right of use in favor of any utility company for electricity, steam, gas, telephone, water, or other service, and the right to construct, use, maintain, repair, and replace all utility lines, wires, terminal boxes, mains, pipes, cables, conduits, poles, connections and other equipment and facilities on, under and across the Land and Building.

(ix) Any Party walls and party wall agreements;

(x) Any other covenants, restrictions, easements, or any other encumbrance (other than for the payment of money), provided that they do not prohibit the existence and use of such Residential Unit;

(xi) Revocability of licenses for vault space, if any, under the sidewalks and streets and the lien of any unpaid vault tax (which is to be paid by the Condominium Board);

(xii) The lien of any Common Charges and Special Assessments, real estate taxes, water frontage and/or meter charges, sewer rents, vault charges and assessments, provided that apportionment of such items is made as provided in the Section of the Plan entitled "Unit Closing Costs and Adjustments";

(xiii) Leases and service, maintenance, employment, concessionaire and license agreements, if any, of other Units or portions of the Common Elements. Service, labor, concessionaire and maintenance agreements contemplated under the Plan;

(xiv) Any Interim Lease with the Purchaser for such Residential Unit;

(xv) Any lien, notice of pendency or other encumbrance either (i) for which the instrument required to remove said lien, notice of pendency or other encumbrance of record is delivered at or prior to the date of closing of title to the Residential Unit, together with the required recording or filing fee, to the proper party or to the Purchaser's title insurance company, or (ii) as to which the Purchaser's title insurance company will insure that the lien, notice of pendency or other encumbrance will not be collected out of or enforced against the Residential Unit;

(xvi) The lien of any assessment or assessments that are or may become payable in annual installments of which any installment is then a charge or a lien, provided that apportionment thereof is made as provided in the Section of the Plan entitled "Unit Closing Costs and Adjustments";

(xvii) Judgments, bankruptcies or other returns against other persons having names the same as or similar to that of Sponsor or any of its principals, provided Sponsor or any such principals, as the case may be, deliver to the Purchaser or the Purchaser's title insurance company an affidavit showing that such judgments, bankruptcies or other returns are not against Sponsor or any such principals, as the case may be;

(xviii) Uniform Commercial Code financing statements or conditional bills of sale,

provided that (i) such statements were filed on a date more than five years prior to the closing of title to the Unit, (ii) Sponsor executes and delivers to the Condominium an affidavit setting forth that the property covered thereby is no longer in the Residential Unit or is fully paid for, or (iii) a tenant is the debtor thereunder;

(xix) Sidewalk violations and any other violations against the Property that are the obligation of any Board or another Unit Owner to correct.

(xx) All of the terms, burdens, easements, covenants, restrictions, conditions and rules and regulations set forth in the Declaration, the By-Laws (and the Rules and Regulations made thereunder), the Residential Unit Owner's Power of Attorney and the Floor Plans, all as may be amended from time to time; and

(xxi) The standard exceptions contained in the form of fee title insurance policy then issued by the title insurance company insuring Purchaser's title to the Residential Unit.

(xxii) Any encumbrance as to which the title insurance company which insures Purchaser's title to the Unit would be willing, in a fee policy issued by it to Purchaser, to insure Purchaser that such encumbrance (a) will not be collected out of the Unit if it is a lien and (b) will not prevent the use of the Unit for dwelling purposes.

(xxiii) Any lease covering the Unit.

(xxiv) Certificate of Occupancy to be issued covering the Unit if required.

(xxv) Any violations against the Property (other than the Unit) which are the obligation of the Condominium Board or another Unit Owner to correct.

(xxvi) Encroachments of shrubbery, stoops, areas, steps, doors, ledges, window sills, trim, copings, retaining walls, bay windows, balconies, sidewalk elevators, fences, fire escapes, cornices, foundations, footings, chutes, fuel oil lines, drainage and stand pipes, sewerage pipes, air-conditioning Units, canopies, ramps, and similar projections, if any, on, over, or under the Property or the streets or sidewalks or property abutting the Property and the rights of governmental authorities and adjoining property owners to require the removal of any such projections and variations between record lines of the Property and retaining walls and the like, if any.

4. Damage to Units. The Sponsor prior to any Unit closing and the Condominium Board after the first Unit closes shall retain risk of loss to the Building from fire or other casualty. The Sponsor shall retain the risk of loss to the Unit from fire and other casualty until the Purchaser-in-contract shall be conveyed legal title or until the Purchaser-in-contract occupies the contracted-for Unit and assumes risk of loss from the Sponsor. A person in possession who is not an owner cannot insure the Unit since he or she has no ownership interest, and the Unit cannot be doubly insured. Therefore, a purchaser who takes possession of the contracted-for-Unit prior to closing assumes the risk of losses not covered by insurance; if the Unit is damaged prior to closing the purchaser in possession's failure to make repairs will not excuse them from paying the balance of the purchase price and accepting delivery of the deed for the contracted-for Unit. Unit Owners should obtain the following at their own cost: homeowner's insurance including

coverage for the contents of the Unit, personal property, and liability for personal injury as a result of occurrences in the individual Unit.

Except as set forth in the preceding paragraph, all other risk of loss or damage prior to closing is assumed by Sponsor, but Sponsor shall have no obligation or liability to repair or restore the Unit. The Sponsor will make a determination whether or not to repair the damage within fifteen (15) days. If Sponsor or (in the event the Declaration is filed with the Kings County Register's Office) the Condominium Board elect to repair or replace the loss or damage, this agreement shall continue in full force and effect, Purchaser-in contract shall not have the right to reject title to the contracted-for Unit or to receive a credit against, or abatement in, the Purchase Price, and Sponsor shall be entitled to a reasonable period of time to complete or to permit the Condominium Board to complete such repairs or replacements.

If Sponsor or (in the event the Declaration is filed) the Condominium Board do not elect to repair the damage, the Purchase Agreement will be cancelled and be of no further force or effect. Thereafter, the Purchaser-in contract will be refunded all purchase monies paid to Sponsor with interest earned thereon, if any, unless Purchaser-in contract is then in default thereunder (beyond the applicable grace period, if any), in which event the said purchase monies (but in no event to exceed Liquidated Damages) will be retained by Sponsor as recompense. Purchaser-in contract shall not be required to pay the Balance unless and until (i) the contracted-for Unit has been repaired to as near as reasonably possible to its condition immediately prior to the casualty and (ii) its essential services (such as gas, electricity, and heat) and a reasonable means of ingress and egress to the street have been restored. Any proceeds received from insurance or in satisfaction of any claim or action in connection with such loss, shall belong entirely to Sponsor (subject to the rights, if any, of the Condominium Board or other Unit Owners) and if such proceeds are paid to Purchaser-in contract, Purchaser-in contract shall promptly upon receipt turn them over to Sponsor. The provisions of the preceding sentence shall survive the closing.

5. Title to each Unit and its appurtenant interest in the common elements will be conveyed at the closing free and clear of all liens, encumbrances and title exceptions other than those described in the plan and the proposed Unit deed. Title exceptions include the state of facts shown on a stated survey and any additional state of facts a subsequent survey would show, provided that such additional state of facts does not render title unmarketable. Other than the Condominium's governing documents which will be recorded prior to the first condominium Unit closing of title, each condominium will be conveyed free and clear of any leases and mortgages.

6. All personal property located within the Unit on the date the Purchase Agreement is signed or located within the common elements on the date the Declaration of Condominium is filed with the Kings County Register's Office, that is owned by the Sponsor or the owner of the property, is included in the conveyance unless specifically excepted in the offering plan.

7. As per a recent Order issued by the Financial Crimes Enforcement Network (FinCEN), order entitled "Geographic Targeting Order" (which Order can be obtained by visiting https://www.fincen.gov/sites/default/files/shared/Real%20Estate%20GTO%20GENERIC_111518_FINAL.pdf), for all closings on residential properties taking place on or after November 17, 2018, United States title insurance companies are now required to collect and report information regarding purchasers in transactions where:

(a) the purchaser is a corporation, limited liability company, partnership or other similar business entity, whether formed under the laws of a state or of the United States or a foreign jurisdiction; and

(b) the purchaser purchases residential real property located in the Boroughs of Brooklyn, Queens, Bronx, and Staten Island and total purchase price is in the amount of $300,000.00 or more; and

(c) such purchase is made without a bank loan or other similar form of external financing; and

(d) the purchase is made at least in part, using currency or a cashier's check, a certified check, a traveler's check, a personal check, a business check, a money order in any form, or a funds transfer or virtual currency.

Q. UNIT CLOSING COSTS AND ADJUSTMENTS

1. Closing Adjustments. At the closing of title to each Unit, Sponsor and the Purchaser shall apportion, as of midnight of the day preceding the closing: (i) real estate taxes (including all prepaid real estate taxes) and assessments, if any, on the basis of the New York fiscal year beginning July 1 of the year for which assessed, including water charges and sewer rents (if separately assessed) and escrows for real estate taxes, if any; and (ii) rent and other charges, if any, pursuant to a lease for, or tenancy of, such Unit.

2. Closing Costs. At the time of title closing, each Purchaser of a Unit will pay certain closing costs in addition to the legal fees of such Purchaser's counsel and the amount of any net credit in favor of Sponsor resulting from the closing apportionments described above. Such closing costs will include the following, the amounts of which are based on rates in effect on the date of the Plan.

   (i) If such Purchaser elects to obtain fee title insurance, he or she will pay a premium therefor to his or her title insurance company which will vary depending upon the amount of insurance requested. The premium for fee title insurance, if ordered through a title insurance company (the Purchaser is free to choose any title company without incurring additional fees from Sponsor), should be $773.00 for the first $100,000.00 of fee insurance plus $4.36 for each $1,000.00 or fraction thereof of additional fee insurance up to $500,000.00. The premium for mortgage title insurance should be $654.00 for the first $100,000.00 of insurance plus $3.64 for each $1,000.00 or fraction thereof of additional insurance up to $500,000.00. The Sponsors Title Company: a) has updated the title search; and b) has been retained by the Sponsor to clear any title issues affecting the premises, and c) has been retained by the Sponsor to record the condominium declaration and any other documents requiring recording with respect to this offering plan. A copy of the title report will be furnished to the purchaser.

   (ii) A fee for recording the deed and Unit Owner's Power of Attorney of $32.00 for each instrument plus $5.00 per page, together with a service charge to the title company for such recording of approximately $185.00;

   (iii)If Purchaser obtains a mortgage loan, Purchaser will pay:

      (a) a fee and service charge for recording the mortgage at the same rates given above for recording the deed;

      (b) Purchasers will pay a portion of the mortgage recording tax in the amount provided for by law (at the date of the Plan, the tax to the purchaser is 1.8% of the face amount of the mortgage for mortgages under $500,000.00, and 1.925% of the face amount of the mortgage for mortgages over $500,000.00). (Note: The Lending Bank pays an additional 0.25%);

      (c) Purchasers will pay a premium through the title insurance company for the mortgage title insurance policy.

      (d) Purchasers shall pay Seller an equal to all of Purchaser's savings in the mortgage

recording tax to which Purchaser is entitled, whether such savings result from an assignment of an existing mortgage on the Unit or is pursuant to Real Property Law 339-ee or otherwise. (Note: The Lending Bank pays an additional 0.25%);

(e) all costs and expenses in connection with such loan in amounts determined by the lender, i.e., application, points, credit report, survey, appraisal, bank's attorney's fees, Residential and Condominium Endorsements (title insurance forms required by banks) and any other fees required by lender. Sponsor makes no representation or warranty as to such closing costs or expenses or as to the availability of such financing.

(iv) Although statutorily Seller's expense, purchaser shall pay the Real Property Transfer Tax due to The City of New York. This tax is in the amount of 1.425% of the total purchase price of the Unit for Units over $500,000.00 and 1% of the total purchase price for Units $500,000.00 or less. The Purchaser shall also pay for the New York State Real Estate Transfer Tax (currently $2.00 per $500.00, or fractional portion thereof of the purchase price) imposed by statute on transferors of property. For purposes of calculating the transfer taxes to be paid, consideration includes the transfer taxes paid by the purchaser. The sample calculation of taxes below includes tax on the consideration.

(v) Under Section 1402-a of the New York Tax Law, a "Mansion Tax", is payable by the grantee (purchaser) on each conveyance of residential real property, including condominium Units, that meet the consideration thresholds stated below. Residential real property includes a one to three family house, an individual condominium Unit, and a cooperative Unit that is or may be used, in whole or in part, as a personal residence. New York State has adopted changes to the "Mansion Tax" law pursuant to Sections 1402-a and 1402-b of the New York Tax Law imposed on Purchasers of real estate in New York City. The newly adopted rates payable by the Purchaser in New York City are per the following chart:

Purchase Price	**Mansion Tax Rate**
$0.00 to $999,999.99	0.00% of the Purchase Price
$1,000,000.00 to $1,999,999.99	1.00% of the Purchase Price
$2,000,000.00 to $2,999,999.99	1.25% of the Purchase Price
$3,000,000.00 to $4,999,999.99	1.50% of the Purchase Price
$5,000,000.00 to $9,999,999.99	2.25% of the Purchase Price
$10,000,000.00 to $14,999,999.99	3.25% of the Purchase Price
$15,000,000.00 to $19,999,999.99	3.50% of the Purchase Price
$20,000,000.00 to $24,999,999.99	3.75% of the Purchase Price
$25,000,000.00 and above	3.90% of the Purchase Price

(vi) Purchaser shall pay all governmental fees and title company service charges associated with discharging and recording a mortgage lien release and UCC-3 termination statement or other appropriate instruments discharging the Unit and its contents from any mortgage lien and security interest other than the lien of any mortgage loan Purchaser obtains.

(vii) Purchaser will be required to deposit with the Condominium Board two (2) months' estimated monthly common charges for his Unit for the Working Capital fund.

(viii) Purchaser shall be obligated to pay a fee of (i) $2,500.00 to the law firm of Sponsor's attorney for services rendered in connection with recording the Declaration of Condominium and the preparation of documents (ii) $350.00 if the closing is held at any location other than Sponsor's attorney's office at the request of a purchaser (iii) $350.00 payable to Sponsor's attorney if Purchaser applies for and closes with a mortgage; (iv) $250.00 payable to Sponsor's attorney if e-forms for New York City Real Property Transfer Tax are prepared by Sponsor's attorney; and (v) $350.00 for each time the closing is rescheduled at the request of the purchaser (for the costs to fix a new Closing Date and time, to coordinate the attendance of all persons, to re-date the closing documents and to recalculate the closing apportionments).

(ix) At closing, each purchaser shall pay to the Sponsor the sum of $3,500.00 to defray the Sponsor's costs of creating the condominium, e.g., architectural costs, filing fees, legal fees and other costs incurred in creating the condominium.

All fees are cumulative to the extent applicable to an individual Purchaser. If, for example, Unit 2F has a purchase price of $687,645.00, a mortgage of $550,116.00, and title insurance, the following closing costs are estimated:

Owner's liability:	$2,638.00
Loan liability:	$649.00
Mortgage Tax Buyer's Portion:	$10,559.73
NY State Transfer Tax:	$2,802.00
NYC Tax:	$9,977.77
Municipals:	$295.00
Bankruptcy Search:	$50.00
Patriot's Search:	$20.00
Overnights	$50.00
Condominium Endorsement:	$50.00
Environmental Endorsement:	$50.00
Escrow Service Fee:	$50.00
Mortgage Recording Fee:	$200.00
Deed Recording Fee:	$145.00
E- Forms:	$125.00
Transfer Tax Filing Fee:	$250.00
2 months' est. comm. Charges:	$886.88
Legal fee to Sponsor's Attorney:	$2,850.00
Paid to Sponsor for costs:	$3,500.00
TOTAL:	**$35,148.38**

3. In the event that Units have not been separately assessed for real estate tax purposes prior to the closing of title to the first Unit, the Sponsor shall place in escrow in the name of the Condominium Board an amount equal to the real estate taxes which will be levied against the property for the six (6) month period following the first closing and will collect at each Unit closing the estimated amount of taxes attributable to such Unit. The Condominium Board will pay the real estate taxes from the escrow account when taxes are due and payable, and the

funder of the escrow account will be entitled to reimbursement from Unit owners to the extent of the actual assessment. The amount deposited in escrow for real estate taxes will be disclosed in all post-closing amendments until the Units are separately assessed. Until the Units have been separately assessed, all post-closing amendments shall disclose the amount of the funds deposited in escrow for the payment of real estate taxes.

In the event that the Unit has not been separately assessed for the then current fiscal tax year at the time of closing title, the apportionment of real estate taxes shall be based on the Unit's pro rata share (in proportion to its Common Interest) of the then current real estate taxes assessed against the Property. Installments for tax assessments due after delivery of the deed (if any) shall be paid by the Purchaser and shall not be considered a defect in title.

4. As per a recent Order issued by the Financial Crimes Enforcement Network (FinCEN), order entitled "Geographic Targeting Order" (which Order can be obtained by visiting https://www.fincen.gov/sites/default/files/shared/Real%20Estate%20GTO%20GENERIC_111518_FINAL.pdf), for all closings on residential properties taking place on or after November 17, 2018, United States title insurance companies are now required to collect and report information regarding purchasers in transactions where:

(a) the purchaser is a corporation, limited liability company, partnership or other similar business entity, whether formed under the laws of a state or of the United States or a foreign jurisdiction; and

(b) the purchaser purchases residential real property located in the Boroughs of Brooklyn, Queens, Bronx, and Staten Island and total purchase price is in the amount of $300,000.00 or more; and

(c) such purchase is made without a bank loan or other similar form of external financing; and

(d) the purchase is made at least in part, using currency or a cashier's check, a certified check, a traveler's check, a personal check, a business check, a money order in any form, or a funds transfer or virtual currency.

R. RIGHTS AND OBLIGATIONS OF SPONSOR

1. The Sponsor will endeavor in good faith to sell all of the Units in a reasonably timely manner. The Sponsor is reserving the unconditional right to rent Units rather than sell Units after Consummation of the Plan. Accordingly, there is no commitment by Sponsor to sell more than 15% or one (1) Unit, which is necessary to declare the plan effective.

   The Sponsor has secured construction financing with Sharestates Investments, LLC, with an address at 11 Middle Neck Road, Suite 314, Great Neck, NY 11021. Sponsor believes said financing will be sufficient to complete construction of the Building. The minimum release price of the Units is eighty (80%) of the net sale price for each Unit. There is no restriction by the lender as to the number of Units that must be in contract for the lien on a Unit to be released. It will be the discretion of the lender whether to allow the Units to be converted to rental apartments.

   In addition, the By-laws do not contain a provision that, after the Sponsor Board Control Period, a majority of the Board of Managers must be owner-occupants or members of an owner-occupant's household who are unrelated to the Sponsor and its principal(s). Purchasers should note that owner-occupants may never gain effective control of the condominium and owner-occupants and non-resident owners, such as Sponsor, may have inherent conflicts on management of the condominium.

   In the event of a Bulk Sale by the Sponsor of all or some of its unsold Units, the transferee successor Sponsor will be bound by the Sponsor's representations regarding its commitment to sell Units.

2. Sponsor shall be obligated to defend any suits or proceedings arising out of Sponsor's acts or omissions and to indemnify the board of managers and the Unit owners.

3. All representations under the offering plan, all obligations pursuant to the General Business Law, and such additional obligations under the offering plan which are to be performed subsequent to the closing date will survive delivery of the deed.

4. Disclaimers of limitations of liability on the part of the Sponsor or its principals for failure to perform any obligation imposed by applicable statute or regulation may not be included. The plan may not include any financial limitation on Sponsor's liability for failure to perform its obligations under the offering plan.

5. Sponsor agrees to pay all common charges, special assessments and real estate taxes with respect to unsold Units. Sponsor represents that it has the financial resources to meet its obligations with respect to unsold Units. Such obligations shall be funded through the rentals and sales of unsold Units and from other funds of the Sponsor. No bond or other security has been posted to secure Sponsor's obligations.

6. The Sponsor will cause the Board of Managers to maintain the property in substantially the same condition and manner as on the date of first closing until the Sponsor no longer controls the Board of Managers.

7. If the Purchaser is or becomes the tenant or the occupant of the Unit before the closing of title thereto and, before such closing, the Unit is damaged by casualty or otherwise, such Purchaser shall assume the risk of loss and the obligation to repair the damage to his/her personal belongings and any other property not covered by the insurance for the condominium, unless the cause thereof originated outside of the Unit and did not result from the acts of such Purchaser or other occupants of the Unit or such Purchaser's guests, invitees, or workmen. Additionally, if before closing, the Unit is damaged by casualty or otherwise, a purchaser will not be able to close a loan on the damaged Unit and insurance proceeds will not be made available to a purchaser to restore a Unit prior to closing.

   Except as set forth in the preceding paragraph, all other risk of loss or damage prior to closing is assumed by Sponsor, but Sponsor shall have no obligation or liability to repair or restore the same. The Sponsor will make a determination whether or not to repair such damage within fifteen (15) days after the date of the casualty. If Sponsor or (in the event the Declaration is filed) the Unit Owners do not elect to repair the damage, the Purchase Agreement will be cancelled and be of no further force or effect. Thereafter, the Purchaser will be refunded all purchase monies paid to Sponsor with interest earned thereon, if any, in which event the said purchase monies (but in no event to exceed the Liquidated Sum) will be retained by Sponsor as and for liquidated damages. If Sponsor elects to repair or replace the loss or damage, the Purchase Agreement shall continue in full force and effect, Purchaser shall not have the right to reject title to the Unit or to receive a credit against, or abatement in, the Purchase Price, and Sponsor shall be entitled to a reasonable period of time to complete such repairs or replacements.

8. Sponsor shall procure fire and casualty insurance in an amount sufficient to avoid co-insurance, as reflected in Schedule B.

9. In the event of dissolution or liquidation of the Sponsor or the transfer of twenty percent (20%) or more of the total number of Units in the condominium to one purchaser, the principals of the Sponsor will provide financially responsible entities or individuals who will assume the status and all of the obligations of the Sponsor for those Units under the offering plan, applicable laws or regulations and in the event of dissolution or liquidation, the principals of the Sponsor shall guarantee the performance of such obligations.

10. <u>Construction</u>

   Sponsor is obligated to build and complete the condominium in accordance with the building plans and specifications disclosed in the plan and will, at its sole cost and expense, perform or cause to be performed such work, and will supply or cause to be supplied all materials, necessary to complete the Building and its appurtenances substantially in accordance with the "plans and specifications" (as hereinafter defined) and with a quality of construction comparable to currently prevailing local standards, however, the Sponsor may not substitute equipment or materials of lesser quality or design.

   All references in this Plan to "Plans and Specifications" shall mean the plans and specifications for the Building identified in the offering plan and filed with the Department of Buildings and other appropriate governmental authorities (some of which are summarized in

Document Number 1 of Part II of the Plan), as the same may be amended or changed from time to time in accordance with the provisions of the following sentence.

Sponsor reserves the right to amend or modify from time to time the Plans and Specifications (including, without limitation, changes in layouts and designs or changes affecting the materials, appliances, equipment, fixtures and other construction details) and to substitute materials, appliances, equipment and fixtures in place of those described in the plans and specifications, provided such substitutions are of Equal or Better Quality and design. The foregoing notwithstanding, no change will be made in the size or number of Units and/or their respective percentages of common interest, and that no material change will be made in the size or quality of common elements, except by amendment to the plan and, when applicable, to the declaration. There is a rebuttable presumption that a Unit size that is diminished by five percent (5%) or less is not material. Unless all affected Unit Owners and affected contract vendees consent in writing to such change, no material change will be made in Unit size, layout, or percentage of common interest if a purchase agreement has been executed and delivered to the Sponsor for that Unit and the purchaser is not in default, and unless all purchasers consent, no material change will be made in the size and no material adverse change will be made in the quality of common elements.

Sponsor shall not be obligated to correct and will not be liable to any Purchaser as a result of: (i) any immaterial variations from the Plans and Specifications or the description of the Building or a Unit set forth in the Plan; or (ii) immaterial variations from the Plans and Specifications or the description of the Building or a Unit set forth in the Plan which are neither in violation of applicable building codes, nor require the approval of any governmental authority having jurisdiction, provided such variations are of Equal or Better Quality than as set forth in the Description of Property and Specifications as set forth as Exhibit 1 in Part II of the Plan. Any such variation will be disclosed in a duly filed amendment to the Plan. Sponsor is obligated to complete construction in accordance with all applicable laws and codes and substantially in accordance with filed building Plans and Specifications.

The issuance of a temporary or permanent Certificate of Occupancy for all or any portion of the Building shall be deemed presumptive evidence that the construction of the Building or such portion and its appurtenances and all of the Units has been substantially completed in accordance with this Plan and the Plans and Specifications approved by the DOB. However, notwithstanding the foregoing, Sponsor or its representatives will correct, repair or replace all defects in the construction of the Building and its appurtenances and the Units offered hereby, or in the installation or operation of any appliances, fixtures or equipment in the same, or will cause the same to be corrected, repaired or replaced, but only if such defects are due to improper workmanship or material substantially at variance with the Plans and Specifications in any material respect, and Sponsor is notified by the Condominium Board or the affected Unit Owner in writing of such defect: (i) as to the Common Elements, within one (1) year from the earlier of the issuance of a temporary Certificate of Occupancy for the portion of the Building subject to such defect or the date of substantial completion of the portion(s) of the Common Elements which is claimed to be defective; or (ii) as to any Unit, on or prior to the date of closing for such Unit, except that if any such defect in a Unit can be detected only by occupancy of the Unit, Sponsor will correct such defect if notified in writing by the Unit Owner within one (1) year from the earlier of the closing of title to such Unit or the commencement date of an interim lease for such Unit. Notwithstanding the foregoing, Sponsor will not be

responsible for correcting any defects in construction or installation or operation of any appliances, equipment or fixtures with respect to which assignable warranties or other undertakings (however denoted) from contractors, materialmen or others are assigned to the Condominium Board or Unit Owners; or for any condition resulting from normal wear and tear or natural deterioration or from normal settling or shifting of the Building, or for defects of an insubstantial nature, such as, without limitation, partial or total demise of any landscape improvements, nail pops, ridging on gypsum board or sheet rock walls, lumber shrinkage, doors or windows sticking due to weather, door warpage, grouting cracks, scratches in stone, formica or porcelain surfaces, bath and kitchen tile grouting cracks, adjustment of any bi-fold doors, walls not square, electrical plates not straight, discolorations or shrinkages, normal settlement and deflection or any consequential damage resulting therefrom including, without limitation, cracks in any concrete roof pavers, or concrete cracks which do not impair the structural soundness of the Building, ceiling imperfections, slight separation in joints of kitchen tile or wood flooring, warping, cupping or creaking of wood flooring or any nicks, scratches, gouges, imperfections or discolorations thereof, floors out of level, variations in width, length or tone of wood floor strips or other flooring or floor finishes, also, normal shrinkage or expansion of wood flooring due to changes in moisture content of wood, ceiling imperfections, painting defects, alignment of bathroom finishes, air infiltration from windows, any consequential damage resulting from settling (including, without limitation, concrete or drywall cracks which do not impair the structural soundness of the Building), existence of mold, normal plumbing, heating and air conditioning noises, or carpet discoloring and stretching; or for paint touch-ups or for repair of chips, mars, breaks or other defects in windows, and window sashes, sliding glass doors, lighting fixtures and globes, interior painted surfaces, sinks, tubs, bowls, shower doors, kitchen cabinets, counter tops, vanity tops and bases, medicine cabinets, doors, mirrors, saddles, appliances, woodwork, doors, hardware, flooring and appliance cabinets, salting, or color variation in exterior colored mortar and deep colored brick, ponding and/or controlled drainage on the roof finish, or cracks in any pressure treated wood or redwood used or intended for use outside the Building. Sponsor shall be obligated to repair only abnormally chipped stone, formica and porcelain surfaces, which repair shall be made by filling the stone or formica or refinishing the porcelain, but Sponsor shall not be obligated to replace such stone, formica or porcelain surfaces. Except as expressly set forth herein, Sponsor has no obligation to make any repairs of any kind. In no event shall Sponsor be liable for special or consequential damages (whether based on negligence, breach of contract, warranty, or otherwise), it being intended that Sponsor's sole obligations under the Plan shall be to repair or, at Sponsor's option, replace any defective item of construction (whether arising as a result of defects in material or improper workmanship or material substantially at variance with the Plans and Specifications), subject to the terms and conditions set forth in this paragraph, provided, however, that nothing contained herein is intended to relieve Sponsor of liability for actual damages resulting from property damage or personal injury arising as a result of negligence of Sponsor or its authorized agents or employees in connection with the transactions contemplated in the Plan.

In addition, in no event shall Sponsor or any contractor or supplier of the Sponsor, be required as a condition to closing, to correct any of the following: (i) any condition resulting from normal wear and tear or natural deterioration or from the normal settling or shifting of the Building, (ii) defects of an immaterial nature, such as, without limitation, nail pops, ridging on sheet-rock walls and ceilings, lumber shrinkage, door or window sticking due to weather, door warpage, including, without limitation, warpage of the main entrance door within

reasonable tolerances of doors of similar size, weight and quality, slight scratches in plastic laminate, porcelain, or other surfaces, imperfect bath and kitchen tile grouting, adjustment of bi-fold doors, walls not square, electrical plates not straight, discoloration or shrinkage, slight separation in joints of flooring or between base and floor, (iii) normal settlement and deflection or any consequential damage resulting therefrom, including, without limitation, cracks in concrete roof pavers (if any), or concrete cracks (if any) which do not impair the structural soundness of the Building, (iv) variations in floor levels, (v) ceiling imperfections, (vi) painting defects, (vii) alignment of bathroom finishes, (viii) air infiltration from windows, (ix) normal plumbing, elevator, trash chute, heating and air-conditioning noises, (x) normal floor noises and creaking, (xi) floor discoloring, (xii) variations in width, length or tone of wood floors, (xiii) repair of chips, scratches, mars, breaks or other defects in any windows, window sashes, sliding glass doors, shower doors, electrical fixtures and globes, painted surfaces, sinks, tubs, basins, kitchen cabinets and countertops, vanity tops and cabinets, medicine cabinets, ceramic tile, marble floors and walls, resilient flooring, saddles, appliances, woodwork and doors, mirrors, hardware, appliance cabinets and flooring, (xiv) subsequent to the closing of title to the Unit, paint touch-ups, repairs of dented appliances, carpet discoloration, stretching or shrinkage, or replacement of fluorescent light ballasts in such Unit, (xv) variations in tone or color of marble or stone used in bathrooms or variations in tone or color of vanity tops or other marble or stone aggregate surfaces, (xvi) salting or color variation in exterior colored mortar and deep colored brick, (xvii) ponding and/or controlled drainage on the roof surface, (xviii) cracks in pressure treated wood used or intended for use outside the Building, (xix) seepage through masonry walls, (xx) the partial or total death of any trees, shrubs, bushes, ground cover, grass or other landscape improvements including any such landscape improvements in the garden, (xxi) damage to walkways or other concrete areas caused by the application of deicers, (xxii) water problems caused by ice dams, normal plumbing and heating noises, (xxiii) carpet stretching, normal settlement cracks on concrete foundations, patios, terraces, sidewalks and other flat work, (xxiv) basement leaks resulting from acts of God or alteration of landscaping or grading, leakage resulting from "ice dams" forming on roofs, shading variations of the exterior siding straining (on the face surface or grooves), and shading variations on fasciae from staining. Sponsor shall be obligated to repair abnormal scratches by filling any plastic laminate scratches or refinishing any porcelain scratches, but Sponsor shall not be obligated to replace such plastic laminate or porcelain surfaces. References in this Section or elsewhere this Plan to excluded repairs or excluded conditions with respect various items listed shall not be construed to imply an obligation on the part of Sponsor to do any work or construction or to install any equipment, fixtures or appliances or other items except, in each case, as expressly provided in the Section entitled "Description of Property and Specifications" contained in Part II of this Plan.

8. Each Unit offered hereby and the fixtures and personal property contained therein, are being sold and delivered "AS IS," as described in the Plan at the time of transfer of title to such Unit, unless Sponsor and the Purchaser of such Unit otherwise agree in writing (subject to Sponsor's obligation to deliver the Unit in the condition set forth in the Section of Part II of the Plan entitled "Description of Property"). The Purchaser of a Unit shall inspect such Unit prior to the closing date and shall execute at such time an inspection statement attached to Document No. 2 in Part II of the Plan acknowledging the Purchaser's acceptance of the Unit in good condition and in accordance with the terms of the Plan. See the Purchase Agreement annexed as Document No. 2 in Part II of the Plan. However, if a Purchaser finds that Sponsor's improvements as described in the Plan or in the Purchase Agreement for such Unit or other

writing duly executed and delivered by Sponsor, have not been fully completed, although such improvements have been substantially completed, then Sponsor or its designated representative and the Purchaser will at the time of such execution agree upon and set forth in the inspection statement a list of the incomplete work to be completed in the Unit by Sponsor following the closing for such Unit. Sponsor reserves the right to limit the number of individuals who may accompany Purchaser(s) in its inspection of the Unit. The Building was constructed in 1940. Buildings constructed prior to 1979 may contain lead paint, and buildings constructed before 1960 are presumed to contain lead paint. The ingestion of lead paint poses serious health risks, especially in young children. Purchasers are advised to familiarize themselves with New York City Local Law 1 of 2004, a copy of which is included as an exhibit to this plan. Purchasers for investment are advised that there are certain occupancy and turnover requirements contained therein. Purchasers of a Unit for their own occupancy, particularly those with young children, are additionally advised to consult with a professional to determine the existence of, and any appropriate remediation for lead paint. Prior to the closing of a Unit, Purchaser shall not be entitled to conduct any invasive testing in the Unit including, without limitation, making holes in the walls or ceiling and/or removing sheet rock, tiles, wood flooring, windows or window panes to test for mold, asbestos, mildew, spores, fungi or other toxins or for any other purpose.

Housing Merchant Implied Warranty.

Notwithstanding any other provision of the Offering Plan the following is applicable to this Offering:

The following is a brief summary of GBL Article 36-B, which went into effect as of March 1, 1989. The full text of the law is set forth in Part II as Document No. 8.

(a) Housing affected: Newly constructed single-family homes and cooperative and condominium Units in buildings of five (5) stories or less. This law affects the condominium Units offered in this Offering Plan.

(b) Coverage:

(i) For one (1) year, the home must be free from defects caused by workmanship or materials that do not meet the standards of the applicable building code; for items not covered by code, the construction must be in accordance with locally accepted building practices.

(ii) For two (2) years, the plumbing, electrical, heating, cooling and ventilation systems must be free from defects caused by unskillful installation.

(iii)For six (6) years, the home must be free from physical defects in the structural elements (foundation, floors, walls, roof framing).

(c) Not covered:

(i) A defect not caused by defective workmanship, materials or design.

(ii) Defects in items sold with the home, such as stoves, refrigerators, air conditioners, etc. There are implied warranties from the manufacturers of such goods which are described in other laws.

(d) Notice: Buyers must give notice of defects in their home in writing no later than thirty (30) days after the end of the warranty period.

(e) Limitation of the Warranty:

The Housing Merchant Implied Warranty can be limited, provided however, that Sponsor's obligation, regardless of any limitation in the warranty cannot go below the duty to renovate the premises in accordance with all applicable codes, filed plans and specifications and locally accepted building practices for items which are not covered by the codes and the limited warranty time constraints may not be shortened by those described herein above.

The Sponsor has elected to limit the said Housing Merchant Implied Warranty. The Sponsor reserves the right to amend the plan to modify the limitation on the warranty for any Unit which has not been conveyed by deed or purchased via execution of a contract of sale.

(1) The Sponsor's maximum liability to any Unit owner under the Sponsor's Limited Warranty is limited to fifty percent (50%) of the purchase price of the Unit.

(2) The Sponsor's Limited Warranty excludes all consequential, incidental, special damages not foreseeable to the Sponsor and indirect damages.

(3) The Sponsor's Limited Warranty does not cover defects in appliances, fixtures, equipment and household items, except defects due to improper installation by the Sponsor.

(4) The Sponsor's Limited Warranty does not cover any defects for any labor or in any work or materials ordered directly by any purchaser from Sponsor's sub-contractors, suppliers, or any independent contractor not engaged in any non-delegable duty(ies).

(5) The Sponsor's Limited Warranty is limited to actual purchasers and their successors whom acquire title to the subject Unit by will or by the governing intestacy laws.

(6) In addition, the following items are not covered by the Sponsor's Limited Warranty:

(a) conspicuous defects and any defects which an inspection of the Unit would reveal;

(b) damage caused by the failure of the purchaser or any affiliate thereof, to comply with the requirements of the Sponsor's Limited Warranty or of any requirements imposed by a manufacturer, supplier of appliances, fixtures, equipment or household items;

(c) damage caused by the misuse, overuse, or interference by purchaser or anyone other than the Sponsor or its employees or delegates;

(d) any additional damage caused by the failure of purchaser to give adequate notice to the Sponsor of any defects or damage in a timely fashion as provided in the Sponsor's Limited Warranty;

(e) any damage caused by changes, alterations or improvements made to the Unit by anyone other than the Sponsor or its employees or delegates;

(f) any damage caused by purchaser's failure to adequately maintain and preserve any item or property covered under the Sponsor's Limited Warranty;

(g) any loss or damage caused by or stemming from an accident, catastrophe, unnatural forces due to violence or gross negligence, fire, explosion, smoke, motor vehicles, acts of God, lightening, windstorm, hail, flood, earthquake, soil movement, and changes in the underground waterbase;

(h) any loss or damage caused by seepage of water unless such loss or damage is directly related to a construction defect resulting from renovation by the Sponsor;

(i) any damage resulting from purchaser's failure to take timely action to mitigate any pre-existing damages;

(j) any condition resulting from normal wear and tear or form normal settling of the building, including but not limited to, concrete cracks, outer building cracks which do not impair the structural stability of the building;

(k) insects, vermin, rodent damage and infestation, or damage caused by other animals or pests;

(l) death, bodily injury or damage to personal property;

(m) damage which arises from any misuse or unauthorized use of the Unit.

(7) Repair of any damage to the load bearing portions of the Unit or Building will be limited to that which is necessary to restore their load bearing functions.

THE SPONSOR'S LIMITED WARRANTY REPLACES ALL OTHER WARRANTIES ON THE CONSTRUCTION AND SALE OF THE UNIT AND ANY AND ALL COMPONENTS THEREOF, BOTH EXPRESS AND IMPLIED (INCLUDING BUT NOT LIMITED TO, ANY IMPLIED WARRANTIES OF MERCHANTABILITY OR FITNESS FOR A PARTICULAR PURPOSE).

REGARDLESS OF ANY LIMITATION IN THIS OFFERING PLAN THE SPONSOR IS OBLIGATED TO RENOVATE THE BUILDING IN ACCORDANCE WITH ALL APPLICABLE CODES, FILED PLANS, AND SPECIFICATIONS. ANY CONFLICT BETWEEN THE DISCLAIMERS LISTED IN THE OFFERING PLAN AND THE SPONSORS OBLIGATION TO RENOVATE THE PREMISES IN ACCORDANCE WITH APPLICABLE CODES, FILED PLANS, AND SPECIFICATIONS SHALL BE RESOLVED IN FAVOR OF THE LATTER.

THE FULL TEXT OF SPONSOR'S LIMITED WARRANTY IS ANNEXED TO THE PURCHASE AGREEMENT AND SET FORTH IN PART II OF THIS PLAN. PURCHASERS ARE URGED TO REVIEW THE SPONSOR'S LIMITED WARRANTY CAREFULLY BEFORE EXECUTING A PURCHASE AGREEMENT.

Sponsor will not be obligated to correct and will not be liable to any Unit purchaser as a result of: (i) any immaterial variations from filed building plans or the description of the Building set forth in the Plan; or (ii) minor variations from filed building plans or the description of the Building set forth in the Plan which are neither in violation of applicable building codes nor require the approval of any governmental authority having jurisdiction or which are necessitated by site conditions or job requirements, or (iii) immaterial variations in the dimensions or arrangement of rooms, walls or other areas within Units, provided (A) such variations are of Equal or Better Quality and design than that originally set forth in said plans or description, and (B) such changes did not affect the common interests or adversely affect the value of any Unit to which title has closed or for which a purchase agreement has been executed and is in effect, unless all Unit Owners affected by such change consent in writing to such change and all contract vendees directly affected by such change are given the right to rescind their purchase agreements and have their down payments returned to them. A decrease in area of 5% or less could be material and trigger a right of rescission. However, there is a rebuttable presumption that an area that is diminished by 5% or less is not material.

Sponsor has no obligation to correct or repair any other defect or conditions in the Units, the Common Elements or the Building, or any other installations, apparatuses, fixtures or appurtenances. The representations set forth in this Plan and applicable law set forth the entire obligation of Sponsor to correct any defects and none other shall be implied. Except as provided in this Plan or under applicable law, each Purchaser of a Unit shall be required to complete the payment of the purchase price (without the provision of an escrow) and accept title at the time of closing, notwithstanding Sponsor's failure to complete the construction, finishing and decorating of such Unit or other Units or hallways or the Common Elements, so long as a temporary or permanent certificate of occupancy has been issued covering such Unit and such Unit's kitchen and bathroom appliances and fixtures are operable and its windows, interior walls and floors are installed in accordance with this Plan.

11. Prior to closing the first Unit Sponsor shall obtain a temporary certificate of occupancy for the Unit. The Sponsor and its principals agree to obtain a permanent certificate of occupancy for the Unit within two (2) years after closing the first Unit.

Purchasers are advised that in New York City, newly constructed and newly renovated buildings are sometimes offered as condominium projects without a final certificate of occupancy ("FCO") covering the entire building but with only a temporary certificate of occupancy ("TCO"), and sometimes with several successive temporary certificates of occupancy. Certificates of occupancy are generally governed by Section 301 of the New York Multiple Dwelling Law and local building codes and rules. Both TCOs and FCOs are issued by the New York City Department of Buildings ("DOB"). A TCO is intended to indicate that the property conforms substantially to the DOB approved plans and specifications, and to the requirements of all applicable laws, rules, and regulations for the uses and occupancies specified in the TCO. No change of use or occupancy shall be made unless a new certificate of occupancy is issued. All TCOs have an expiration date. A TCO typically expires ninety (90)

days after the date of issuance. When a TCO expires and is not renewed, it may be difficult or impossible to buy insurance, refinance, or sell Units. In New York City, it is common for Sponsors to commence Unit closings when some or all Units are covered by a TCO rather than an FCO. Sponsor anticipates this scenario may occur. Sponsor and its principals will undertake the responsibility for extending each TCO received prior to expiration thereof, and ultimately for obtaining an FCO covering the entire building within two (2) years from the date of the issuance of the first TCO. However, Sponsor and its principals make no representation or guarantee that DOB will issue the FCO within such two-year period. NOTWITHSTANDING THE FOREGOING, SPONSOR AND ITS PRINCIPALS ARE OBLIGATED TO PROCURE THE FINAL CERTIFICATE OF OCCUPANCY FOR THE ENTIRE BUILDING AND SHALL EXERCISE BEST EFFORTS TO OBTAIN THE FCO WITHIN SUCH TWO-YEAR PERIOD WHILE KEEPING THE TCO CURRENT. Unit owners and the Board of Managers shall be obligated to cooperate with and refrain from obstructing Sponsor in these undertakings.

Sponsor will maintain sufficient funds in escrow to cover the anticipated costs of obtaining an FCO. However, the TCO may lapse for reasons outside the Sponsor's control. In the absence of an FCO or TCO it is unlawful to reside in or rent a Unit and will be difficult for owners or purchasers to obtain financing or pass clear title

Furthermore, because Sponsor and the by-laws of the Condominium may permit Unit owners to undertake renovations to individual Units prior to the procurement of an FCO, such renovations may cause additional delays in the issuance thereof. Notwithstanding the foregoing, Sponsor and its principals are obligated to procure the FCO.

Buyers are advised to visit the DOB website for further recommendations when purchasing a Unit in a building that does not have an FCO. A Factsheet on Certificates of Occupancy is available on the DOB website at:

http://www.nyc.gov/html/dob/downloads/pdf/co_factsheet.pdf

Furthermore, because Sponsor and the By-Laws of the Condominium may permit Unit owners to undertake constructions to individual Units prior to the procurement of an FCO, such constructions may cause delays in the issuance thereof. Notwithstanding the foregoing, Sponsor and its principals are obligated to procure the FCO.

12. If the first closing takes place prior to the issuance of a permanent certificate of occupancy for the Building, Sponsor will maintain all deposits and funds in the special escrow account required by GBL Section 352-e(2)(b) unless the Sponsor's engineer, architect or other expert certifies that a lesser amount will be reasonably necessary to complete the work needed to obtain a permanent certificate of occupancy, in which case the sum exceeding the amount so certified by the Sponsor's engineer or architect may be released from the special escrow account. Alternatively, the Sponsor must deposit with an Escrow Agent an unconditional, irrevocable letter of credit or post a surety bond in the amount so certified. Any amount retained in escrow pending the delivery of a permanent certificate of occupancy, and the architect's certification certifying such amounts as sufficient, will be included in the initial post-closing amendment, and, if applicable, in subsequent amendments to reflect any changes in the amount escrowed. The use of any alternate security, if approved by the Attorney General, will be

previously disclosed in an amendment to the Plan.

13. Prior to the closing of a Unit, Sponsor will assign any manufacturer's warranties with respect to equipment and appliances installed in the Unit to the Unit Owner and assign any warranties with respect to equipment and appliances installed in the Common Elements to the Board of Managers.

14. Sponsor agrees to pay for the authorized and proper work involved in the construction, establishment and sale of the condominium that Sponsor is obligated to complete under the plan and shall cause all mechanic's liens with respect to such construction to be promptly discharged or bonded.

15. The Sponsor will deliver a set of "as-built" plans to the Condominium Board.

16. No bond or other security has been furnished to secure Sponsor's obligations including Sponsor obligations to complete construction of the condominium. The ability of Sponsor to perform its obligations will depend upon its financial condition, when and if it is called upon to perform. No warranty is made that Sponsor will be financially able to perform any of all of such obligations except that the foregoing shall not discharge or otherwise limit Sponsor's obligations under this Plan. If at any time while Sponsor is making an offering or making sales pursuant to the Plan Sponsor's financial condition does not permit it to perform its obligations hereunder, Sponsor will amend the Plan to disclose such change in financial condition and to offer Purchasers with outstanding Purchase Agreements a right to rescind such Purchase Agreements and will cease making sales pursuant hereto until Sponsor's financial condition shall again permit it to perform its obligations hereunder.

17. Sponsor and its contractors, subcontractors, agents and employees will have a right of reasonable access to each Unit and its appurtenant Limited Common Elements and to all of the Common Elements and to all of the Common Elements for purposes of completing construction of the Building or performing certain alterations and repairs in or about Unsold Units and in fulfilling Sponsor's obligations under the Plan, provided (i) Sponsor repairs any resulting damage to the Unit and restores it to substantially the condition it was in prior to Sponsor's entry and (ii) Sponsor provides reasonable prior notice to the Owner of the Unit to which access is required.

18. General

Except for Sponsor's obligations to pay Common Charges and to perform other duties as a Unit Owner with respect to any Unsold Units (for so long as Sponsor owns same), the representations set forth in this Plan sets forth the entire extent of the obligations of Sponsor under this Plan and none other shall be implied, except that nothing contained herein shall be deemed to limit the rights of purchasers relative to their Units under their respective Purchase Agreements and applicable law. Sponsor makes no warranties other than as set forth in this section. The obligations of Sponsor under this section shall survive the delivery of the deeds to the respective Units. Sponsor shall not be liable for, or obligated to defend, any suits or claims with respect to any Unit arising out of any occurrence taking place on or after the date of the closing of title to such Unit or the leasing thereof to any purchaser or, with respect to the Common Elements, or Limited Common Elements, arising out of any occurrence taking place on or after the date of the

First Closing, except suits or claims arising out of the acts or omissions of Sponsor or the representations made by Sponsor in this Plan or any obligations imposed by statutes and/or regulations.

Obligations of Sponsor under this section with respect to the Condominium, the Common Elements or the Limited Common Elements shall be enforceable only by the Condominium Board on behalf of all Unit Owners. During the Sponsor Board Control Period, the obligations by the Sponsor shall be enforceable by the Independent Board Members on behalf of all Unit Owner through binding arbitration. Any provisions that give Sponsor control of the enforcement of the Sponsor's obligations are not lawful. If there is a vote on whether to sue the Sponsor, the Sponsor's board representative cannot lawfully vote on that issue. In no event shall any obligations of Sponsor to the Condominium be enforceable by individual Unit Owners unless the Condominium Board fails to take reasonable action to enforce such obligations within ninety (90) days following the giving of written notice of such claim by any Unit Owner to the Condominium Board.

Sponsor agrees to indemnify the Condominium Board and the residential Unit Owners against, hold them harmless from and defend on their behalf any suits, proceedings, or claims arising out of ANY ACTS OR OMISSIONS BY SPONSOR or any default by Sponsor in performing its obligations under this Plan or any breach of any representation expressly made by Sponsor in this Plan, and resulting: (a) as to any Unit, from any occurrence taking place prior to the closing of title to such Unit; or (b) as to the Common Elements, from any occurrence taking place prior to the First Closing. However, Sponsor will not be liable for, or obligated to defend, any suits, proceedings or claims arising out of any occurrence taking place from and after the respective dates set forth above, except those arising out of any negligence or violation of Article 23A of the New York State General Business Law or ACTS OR OMISSIONS BY THE SPONSOR or as explicitly stated in the Plan.

Sponsor's Right of Access

Sponsor and its contractors, subcontractors, agents and employees will have a right of reasonable access to each Unit and to the Common Elements for purposes of completing construction of the Building or performing certain alterations and repairs in or about Units owned by Sponsor and in fulfilling Sponsor's obligations under the Plan, provided (i) Sponsor repairs any resulting damage to the Unit and restores it to substantially the condition it was in prior to Sponsor's entry, and (ii) Sponsor provides reasonable prior notice to the Owner of the Unit to which access is required.

Sponsor and its invitees, licensees, contractors, subcontractors, agents and employees will have a right of access to each Unit and all of the Common Elements for purposes of completing construction of the Building or performing repairs in or about Units owned by Sponsor or in fulfilling Sponsor's obligations under the Plan or for any lawful purpose, provided (i) Sponsor repairs any resulting damage to the Unit or the Common Elements, as the case may be, and restores the Unit or the Common Elements, as the case may be, to substantially the condition they were in prior to Sponsor's entry and (ii) Sponsor provides reasonable prior notice to the owner of the Unit to which access is required or the applicable Board in the case of the Common Elements.

For additional special rights of Sponsor under the Declaration with respect to the combining and subdividing of Units, designation of any of the Common Elements and other

matters, please see the Section of the Plan entitled "Rights and Obligations of Unit Owners and Condominium Board; Summary of By-Laws" and the copy of the Declaration and By-Laws contained in Part II of the Plan.

Sponsor's Liability

Except for Sponsor's obligations to pay Common Charges and to perform other duties as a Unit Owner with respect to the Units that remain unsold from time to time (for so long as Sponsor owns same), the representations set forth in this plan sets forth the entire extent of the obligations of Sponsor under this Plan and none other shall be implied, except that nothing contained herein shall be deemed to limit the rights of Purchasers relative to their Units under their respective Purchase Agreements and applicable law.

Sponsor makes no undertakings or warranties except as hereinabove set forth and none should be implied. Sponsor does not warrant or guarantee the materials, workmanship or any other aspect of the Units or the Common Elements, any personal property or any portion thereof, except to the extent expressly provided in this Plan.

NOTWITHSTANDING ANYTHING STATED ABOVE, SPONSOR HAS AN ABSOLUTE DUTY TO CONSTRUCT THE BUILDING IN ACCORDANCE WITH THIS PLAN, ALL APPLICABLE CODES AND FILED PLANS AND SPECIFICATIONS AS THE SAME MAY BE AMENDED FROM TIME TO TIME.

Survival of Sponsor's Obligations

Sponsor's obligations and representations under the Plan or under the GBL that are to be performed subsequent to the closing of title to a Unit shall survive delivery of the deed to the Unit affected by such obligation for the limited time periods set forth in the Plan. However, except for those obligations and representations under the Plan or under the GBL that are to be performed subsequent to the closing of title to a Unit as described in the preceding sentence, all obligations of Sponsor under the Plan with respect to any Unit or Unit Owner and under the Purchase Agreement for such Unit with such Unit Owner shall not survive, and shall be deemed satisfied upon, the delivery of the deed for such Unit, unless otherwise expressly provided by applicable law, in the Plan or such Purchase Agreement.

Sponsor's Obligations for Retained Units

So long as Sponsor retains title to any Units, Sponsor shall pay all Common Charges, Special Assessments and real estate taxes with respect to such Units. Sponsor represents that its financial resources will be sufficient to meet its obligations described above and its other obligations described in this Plan. Sponsor intends at present to meet its financial obligations under the Plan through profits generated from sales of Unsold Units and income generated from the rental of Unsold Residential Units and Community Facility Units. Sponsor has not furnished any bond or other security for the performance of its obligations under the Plan, however, and Sponsor's ability to perform its obligations hereunder will depend solely upon its financial condition if and when called upon to perform. No warranty is made that Sponsor will be financially able to perform any or all of such obligations, provided that if at any time while Sponsor is making an offering or making sales pursuant to the Plan Sponsor's financial condition does not permit it to perform its

obligations hereunder, Sponsor will amend the Plan to disclose such change in financial condition and to offer Purchasers with outstanding Purchase Agreements a right to rescind such Purchase Agreements and will cease making sales pursuant hereto until Sponsor's financial condition shall again permit it to perform its obligations hereunder.

Dissolution of Sponsor

If Sponsor shall be dissolved or liquidated or shall transfer in bulk twenty percent (20%) or more of the total number of Units in the Condominium, whichever is less, Sponsor shall provide one or more financially responsible entities or individuals who will assume the status and obligations of Sponsor under the Plan and Applicable Law.

Insurance Described in Condominium Budget

Sponsor shall cause the Condominium to obtain and have in effect as of the date of the First Closing the insurance described in the Footnotes to Schedule B.

S. CONTROL BY SPONSOR

Voting Control Period

Sponsor as Owner of Unsold Units shall have "voting control" (defined below) of the Condominium Board for five (5) years from the first closing of a Unit or whenever the unsold Units constitute less than twenty-five (25%) in of all Units, whichever is sooner (i.e. the Sponsor Board Control Period). The term 'Voting Control' means Sponsor's exclusive right during only the Sponsor Board Control Period, as Owner of Unsold Units: (a) to appoint and designate two (2) Sponsor Board Members who will constitute the majority of all three (3) Board Members; and (b) to vote for the Independent Board Members (who shall have no family, employment or business relationship or affiliation with Sponsor or an Unsold Unit Owner or a related party to Sponsor or an Unsold Unit Owner) After the Sponsor Board Control Period, Sponsor shall continue to have the right, for so long as Sponsor owns at least at least one (1) Unsold Unit, to vote for all Independent Board Members and to exclusively appoint and designate one (1) Sponsor Board Member.

Constitution of the Condominium Board

Until the first meeting of the Unit Owners, to be held within four (4) months after the first closing of a residential Unit under the Plan, the Condominium Board shall consist of three (3) individuals to be appointed and designated from time to time exclusively by Sponsor. After the first meeting of Unit Owners following the first residential Unit closing and at all subsequent meetings of Unit Owners to elect the Condominium Board during the Sponsor Board Control Period, the Board shall be composed of two (2) Sponsor Board Members who will constitute the majority of the three (3) member Condominium Board.

Within thirty (30) days after the expiration of the Sponsor Board Control Period, Sponsor will cause the Condominium Board to call a special meeting of Unit Owners to be held. At such meeting, one (1) Independent Board Member (i.e., individuals who are unrelated to Sponsor and Sponsors principals) will be elected to replace one (1) of the Sponsor Board Members (who will resign effective at the date of such election) in addition to the previously elected Independent Board Member, except a new three (3) Member Board Members will be elected if this is the first meeting of Unit Owners. At such time the Condominium Board shall be composed of two (2) Independent Board Members who will constitute a majority of all Board Members. The By-Laws do not contain a provision that, after the Sponsor Board Control, a majority of the board must be owner-occupants unrelated to Sponsor.

A meeting will be held to elect new board members unrelated to the Sponsor within thirty (30) days of the last closing. At such time the Independent Board Members will constitute all Board Members. Purchasers for their own occupancy may never gain control of the board of directors and owner-occupants and non-resident owners may have inherent conflicts on management of the condominium.

Consequences of Sponsor's Voting Control

As a result of Sponsor's voting control of the Board during only the Sponsor Board Control Period, Sponsor will be able to control the decisions to be made by the Condominium Board,

including those concerning:

(a) the Building's Operations and services, which are nonetheless to be maintained and provided in accordance with the buildings maintenance standard and the level of standards, quality and requirements of Sponsor in accordance with, and as stated in this Plan;

(b) the amount of the Common Charges, which are, nonetheless, to be in an amount sufficient to provide the level of Building services, amenities (if any) and facilities in accordance with, and as stated in, this Plan; and

(c) the expenditures of the Working Capital Fund (which may be used for operating or working capital and to defray increases in common charges but may not be used to reduce common charges below the projected common charges in SCHEDULE B. as explained below.

Sponsor Veto Control

During only the Sponsor Veto Control Period (defined below), the Condominium Board and the Unit Owners (as to any vote or action by them) must obtain Sponsor's prior written discretionary approval or consent to do any of the following (collectively. "Sponsor Veto Control"):

(a) to raise Common Charges or levy a Special Assessment for any of the following purposes:

(1) to make an alteration to the Common Elements, the Association's Properties (including any Unit owned, leased or otherwise held or operated by the Board, or its nominee or designee);

(2) to increase or decrease or eliminate the mandated minimum ten percent (10%) Reserve for Capital Replacements to be included in each Budget in accordance with this Plan and the Condominium Documents (see below);

(3) to increase, decrease or eliminate Building services set forth in said first year's budget or otherwise; or

(4) to increase, decrease, eliminate or otherwise change the amount or types of insurance coverage from those set forth in said first year's budget.

(b) to borrow money on behalf of the Condominium.

Sponsor may not exercise veto power over expenses required:

(a) to comply with applicable laws or regulations;

(b) to remedy any notice of violation;

(c) to remedy any condition requiring repair or replacement immediately necessary for the preservation of or safety of the building or the health or safety of its residents or required

to avoid the suspension of services.

Sponsor, however, will give its discretionary approval or consent if the costs and expenses (as determined by Sponsor, in its sole and absolute judgment) of the proposed action requiring Sponsor's discretionary approval or consent, when added to all other budgeted Common Expenses (as applicable), will not increase the Common Charges, inclusive of any Special Assessment of the Condominium Board, for any budget year of the Condominium, by more than five percent (5%) above the Common Charges for the immediately preceding budget year of the Condominium.

Sponsor will have the exclusive right to exercise veto control only during the Sponsor Veto Control Period. A Successor Sponsor Owner has the same rights and obligations afforded to the Sponsor; therefore, a Successor Sponsor (if any) will have the same right of veto control as Sponsor during the Sponsor Veto Control Period. See Section "Definitions."

Limitations of Veto Control

Sponsor may not exercise veto control over expenses described in the First Year's Budget (Schedule B) or over expenses required: (a) to comply with applicable laws or regulations; (b) to remedy a government notice or violation; (c) to remedy a work order by an insurer of the Building, or any matter concerning the health and safety of the occupants of the building.

Veto Control Period

The Sponsor Veto Control Period will end on the earlier of: (a) the date that the Common Interest appurtenant to the Unsold Units constitute less than twenty-five (25%) of the aggregate Common Interests of all Units; or (b) the fifth (5th) anniversary of the First closing of a Unit under this plan.

T. RIGHTS & OBLIGATIONS OF CONDOMINIUM BOARD, SUMMARY OF BYLAWS

A. The Board of Directors

1. Board Members

The affairs of the building of the Condominium shall be governed by the Condominium Board, which shall consist initially of members designated by the Sponsor. The first three anticipated board members will be Reuven Rothstein, Zaur Laven, the principals of the Sponsor and Yehuda Samet an associate of the Sponsor. Each member of the Board shall have one (1) vote. As provided in the By-Laws, the initial Condominium Board shall consist of three (3) members, each of whom will have one (1) vote. The first meeting to elect board members will be held within four (4) months after the first closing and thereafter, board elections shall take place annually. After the first meeting of Unit Owners following the first residential Unit closing and at all subsequent meetings of Unit Owners to elect the Condominium Board during the Sponsor Board Control Period, the Board shall be composed of two (2) Sponsor Board Members who will constitute the majority of the three (3) member Condominium Board. The term of office of each member of the Condominium Board shall continue for one (1) year. After the initial period of Sponsor control, board members may be a Unit Owner, or a person designated by a Unit Owner. The Board will have at a minimum two (2) independent board members. Any member of the Condominium Board may resign his or her membership at any time by giving written notice thereof to the Condominium Board and, with respect to members of the Condominium Board designated as such. Notwithstanding anything to the contrary, however, each Condominium Board shall serve until a successor Board is elected and qualified.

After the initial period of Sponsor control, a majority of the Condominium Board need not be owner-occupants or members of an owner-occupant's household who are unrelated to the Sponsor and its principals. Purchasers for their own occupancy may never gain control of the Condominium Board and that owner-occupants and non-resident owners, such as Sponsor, may have inherent conflicts on the management of the condominium.

There shall be no limit on the number of terms of office, successive or otherwise, that a member of the Condominium Board may serve. In addition, special meetings of Unit Owners may be held from time to time, pursuant to the By-Laws, whenever necessary for the affairs of the Condominium.

2. Officers of the Condominium

The officers of the Condominium shall consist of the President, the Secretary and the Treasurer, all of whom shall be elected by the Condominium Board which may also appoint additional officers. All officers shall serve without compensation from the Condominium. At least two (2) officers must be members of the Condominium Board and Unit Owners (or officers, directors, partners, employees, beneficiaries (or members of their family) of corporations, partnerships, fiduciaries, or mortgagee that are Unit Owners). Any officer may be removed, without cause, by vote of a majority of the Condominium Board at a meeting called for such purpose.

3. Liability of the Condominium Board and the Unit Owners

The members of the Condominium Board will have no liability to Unit Owners for errors of judgment, negligence, or otherwise, except that individual members will be liable for their own bad faith, willful misconduct or gross negligence.

Every contract made by the Condominium Board, by any officer of the Condominium, or by any superintendent or Managing Agent of the Building, shall state (if obtainable) that (a) it is made only as agent for all Unit Owners, and the members of the Condominium Board or such officer, superintendent, or Managing Agent shall have no personal liability thereon (except in their capacities as Unit Owners), and (b) the liability of any Unit Owner with respect to such contract shall be limited to (i) such proportionate share of the total liability thereunder as the Common Interest of such Unit Owner bears to the aggregate Common Interests of all Unit Owners, and (ii) such Unit Owner's interest in his or her Unit and its appurtenant Common Interest, unless otherwise provided by law.

All Unit Owners shall severally indemnify each member of the Condominium Board against any liability or claim, contractual or otherwise, except those arising out of the bad faith or willful misconduct of such member or that are contrary to law or the terms of the Declaration or the By-Laws. However, the liability of any Unit Owner on account of the indemnification of the Condominium Board will be limited to such proportionate share thereof as the Common Interests of such Unit Owner bear to the aggregate Common Interests of all Unit Owners.

There is no provision for insurance covering indemnification of Board Members. It is at the discretion of the Condominium Board to obtain such coverage, the cost of which will be borne by the Unit Owners as a common expense.

4. Compensation

All members of the Condominium Board shall serve without compensation.

5. Board Member Removal

Any officer may be removed, without cause, by vote of a majority of the Condominium Board at a meeting called for such purpose. While the Sponsor is in control, the Board may not be prohibited from removing members for cause. After the initial five (5) year period of Sponsor control, a Board member may be removed by a majority of the Unit Owners with or without cause.

6. Voting

When votes of the Unit Owners are required, each Residential Unit Owner shall exercise his vote in the manner set forth in the By-Laws, which provides as follows: each Residential Unit Owner (including Sponsor or its designee, for so long as Sponsor or such designee shall own at least one (1) Unit) shall be entitled to cast one (1) vote for each Unit owned.

The presence, in person or by proxy, of a 2/3 majority of all Unit Owners shall constitute a quorum at all meetings of Unit Owners, and unless otherwise provided, the decision of a majority of the Unit Owners at a meeting at which a quorum shall be present shall be binding upon all of

the Unit Owners. See Sections 4.4, 4.5 and 4.8 of the By-Laws attached as Document No. 7 in Part II of the Offering Plan

7. Amendments to the Condominium Documents

Generally, subject to certain exceptions and provided that any required consent of the Mortgage Representatives is obtained, any provision of the Declaration, the By-Laws, or the Rules and Regulations may be amended, modified, added to or deleted by the affirmative vote of 66 2/3% of the Unit Owners, taken in accordance with the By-Laws. However, for so long as Sponsor or its designee is the owner of one (1) or more Units in the entire Condominium, the Declaration, the By-Laws and the Rules and Regulations may not be amended or modified so as to adversely affect Sponsor or such designee without the prior written consent of every Unit Owner affected by such amendment. See Section 5.10 of the By-Laws attached as Document No. 7 in Part II of the Offering Plan.

B. Powers and Duties of the Condominium Board

The Condominium Board has a fiduciary duty to act in the best interest of the Condominium. The Condominium Board shall have the powers and duties necessary for administration of the affairs of the Condominium (subject to the limitations set forth in the By-Laws), including, without limitation, the following:

(a) to operate, maintain, repair, restore, add to, improve, alter and replace the Common Elements, including, without limitation, as the Condominium Board shall deem necessary or proper in connection therewith: (a) the purchase and leasing of supplies, equipment and material and (b) the employment, compensation and dismissal of personnel;

(b) to acquire, in the name of the Condominium Board or its designee, corporate or otherwise, and on behalf of the Unit Owners, all rights, titles and interests in real and personal property deemed necessary or proper by the Condominium Board for use in connection with the ownership and operation of the Property as a residential condominium;

(c) to maintain records with respect to the finances and the operation of the Condominium, including, without limitation: (a) detailed accounts of receipts and expenditures affecting the Property; (b) other financial records, as well as other books of account of the Condominium, as may be required to be kept pursuant to the terms of these By-Laws; and (c) minutes and other records of all meetings held pursuant to the terms of these By-Laws;

(d) to prepare and adopt a budget for the Condominium for each fiscal year thereof, setting forth, without limitation: (a) a detailed accounting of the anticipated Common Expenses for the ensuing fiscal year and (b) a detailed projection of all sources and amounts of income necessary to discharge the same;

(e) to determine the amount and establish the means and methods of payment of, and to collect, the Common Charges and Special Assessments from the Unit Owners;

(f) to borrow money on behalf of the Condominium when required in connection with the operation, maintenance, repair, restoration, improvement, alteration and replacement of the

Common Elements, provided, however, that: (a) with respect to the borrowing of any sum in excess of $25,000.00 in any one fiscal year (regardless of the balance of any loans outstanding from previous fiscal years) in addition to the affirmative consent of a majority of the members of the Condominium Board, the affirmative consent of a majority of all Unit Owners shall be required; (b) no lien to secure repayment of any sum borrowed may be created on any Unit or its Appurtenant Interests without the consent of the owner of such Unit; and (c) the documentation executed in connection with any such borrowing shall provide that, if any sum borrowed by the Condominium Board pursuant to this subparagraph (vi) shall not be repaid by the Condominium Board, any Unit Owner who pays to the creditor thereunder such proportion of the then outstanding indebtedness represented or secured thereby as such Unit Owner's Common Interest bears to the aggregate Common Interest of all Unit Owners shall be entitled to obtain from the creditor a release of any judgment or other lien that the said creditor shall have filed, or shall have the right to file, against such Unit Owner's Unit;

(g) to open and maintain bank accounts on behalf of the Condominium and to designate the signatories required therefor;

(h) to use the Common Charges and Special Assessments collected from Unit Owners, as well as all other funds held by the Condominium Board or received in connection with the operation of the Property, for the administration of the Condominium, including, without limitation: (a) the payment of Common Expenses and (b) the making of restorations, additions, alterations and improvements to the Common Elements;

(i) to obtain insurance for the Property, including the Units, pursuant to the terms of Section 5.4 of the By-Laws which can be found in Part II of this plan;

(j) to adjust and settle claims under insurance policies obtained pursuant to the terms of Section 5.4 of the By-Laws which can be found in Part II of this plan, and to execute and deliver releases upon such adjustment and settlement on behalf of: (a) all Unit Owners; (b) all holders of mortgages and other liens on Units; and (c) all holders of any other interest in the Property;

(k) to make, or to contract with others for the making of, repairs, maintenance, additions and improvements to, and alterations, restorations and replacements of, the Property after damage or destruction by fire or other casualty, or as a result of condemnation or eminent domain proceedings, all in accordance with the terms of these By-Laws;

(l) to accept the surrender of any Unit pursuant to the terms of paragraph (C) of Section 6.2 of the By-Laws which can be found in Part II of this plan, in the name of the Condominium Board or its designee, corporate or otherwise, and on behalf of all Unit Owners;

(m) to purchase, lease, or otherwise acquire Units offered for sale or lease by their owners, in the name of the Condominium Board or its designee, corporate or otherwise, and on behalf of all Unit Owners;

(n) to purchase Units at foreclosure or other judicial sales, in the name of the Condominium Board or its designee, corporate or otherwise, and on behalf of all Unit Owners;

(o) to sell, lease, mortgage and otherwise deal with Units acquired by, and to sublease Units leased by, the Condominium Board or its designee, corporate or otherwise, on behalf of all Unit Owners, provided, however, that the Condominium Board or its designees shall in no event be entitled to exercise the votes appurtenant to any such Unit;

(p) to adopt and amend the Rules and Regulations and to levy and collect fines against Unit Owners for violations of the same;

(q) to enforce by legal means the terms, covenants and conditions contained in the Condominium Documents and to bring or defend against any proceedings that may be instituted on behalf of, or against, the Unit Owners;

(r) to incorporate, to the extent and in the manner provided in the Condominium Act, provided, however, that: (a) the certificate of incorporation and by-laws of any such resulting corporation shall conform as closely as practicable to the terms of the Declaration and these By-Laws and (b) the terms of the Declaration and these By-Laws shall prevail in the event of any inconsistency or conflict between the terms thereof and the terms of such certificate of incorporation and by-laws;

(s) to organize corporations to act as the designees of the Condominium Board in acquiring title to, or leasing of, Units and in acquiring rights, titles and interests in real and personal property for use in connection with the ownership and operation of the Property as a residential condominium;

(t) to execute, acknowledge and deliver: (a) any declaration or other instrument affecting the Property that the Condominium Board deems necessary or appropriate to comply with any Law applicable to the maintenance, demolition, renovation, alteration, repair, or restoration of the Building and (b) any consent, covenant, restriction, easement, or declaration affecting the Property that the Condominium Board deems necessary or appropriate;

(u) to prepare, execute, acknowledge and record on behalf of all Unit Owners, as their attorney in fact, coupled with an interest, a restatement of the Declaration or the By-Laws, whenever, in the Condominium Board's estimation, it is advisable to consolidate and restate all amendments, modifications, additions and deletions theretofore made to the same; and

(v) to carry out any other duties imposed upon the Condominium Board pursuant to the Declaration and the By-Laws.

C. Meeting and Votes of the Unit Owners.

Under the Condominium By-Laws, set forth in Part II of the Plan, until the first sale of a Unit, the initial three (3) member Condominium Board shall be designated by the Sponsor. Within four (4) months of the first closing, a meeting will be held to elect a new Condominium Board consisting of three (3) Board Members. At such time, the Sponsor shall designate two (2) of the three (3) Board Members, who shall serve for the Sponsor Control Period. The other Board Members shall be elected by all Unit Owners, for a term of one (1) year. Elections for these seats on the Condominium Board shall be held annually. After the initial period of Sponsor control, the

Condominium Board shall consist of three (3) members, each of whom will have one (1) vote. Board elections shall take place annually. The term of office of each member of the Condominium Board shall continue for one (1) year. Any member of the Condominium Board may resign his or her membership at any time by giving written notice thereof to the Condominium Board and, with respect to members of the Condominium Board designated as such. Notwithstanding anything to the contrary, however, each Condominium Board shall serve until a successor Board is elected and qualified.

(a) Meeting. Except for the first meeting, the Unit Owners shall hold annual meetings on or about the anniversary of the first meeting and every anniversary thereafter, unless such date shall occur on a legal holiday, in which event the meeting shall be held on the succeeding business day. At each annual meeting, the Unit Owners shall conduct such business as may properly be conducted. In addition, special meetings of Unit Owners may be held from time to time, pursuant to Article 2 of the By-Laws, whenever necessary for the affairs of the Condominium.

(b) Quorum. The presence, in person or by proxy, of a 2/3 majority of all Unit Owners shall constitute a quorum at meetings of Unit Owners.

(c) Voting. In votes of the Unit Owners, each Unit Owner (including Sponsor or its designee, for so long as Sponsor or such designee shall own Unsold Units) shall be entitled to cast one (1) vote for each Unit owned. Unless otherwise provided, the affirmative 2/3 majority vote of the Unit Owners at which a quorum is present shall be binding upon all of the Unit Owners.

(d) Designation of Board Members. Board Members are elected annually by a majority vote of all Unit owners present at a regular or special meeting at which a quorum is present.

D. Condominium Board Meetings and Voting:

(a) After the initial period of Sponsor control, the Condominium Board will consist of three (3) Board Members with one (1) Board Member designated by and representing the Unit Owners.

(b) Quorum. A quorum for meetings of the Condominium Board consists of a majority of the members of the Condominium Board.

(c) Voting. All decisions or acts requiring a vote, resolution, approval, agreement or consent of the Condominium Board must be made by the affirmative vote, approval, resolution, agreement, or consent of a majority of the Board Members at which a quorum is present.

E. Repairs, Alterations and Improvements to Common Elements

All painting, decorating, maintenance, repairs and replacements to the Common Elements, whether located inside or outside of Units, shall be made by the Condominium Board, which need not obtain the approval of the Unit Owners or of mortgagee of Units (regardless of the cost thereof),

and the cost of the same shall be a Common Expense (unless necessitated by the negligence, misuse, or neglect of a Unit Owner, in which case such Unit Owner will bear the entire cost thereof). It should be noted that windows and entrance doors to the Units shall be deemed part of their respective Unit. In connection with the foregoing, the exterior glass surfaces of all windows located in any Unit are to be washed and cleaned by the owner of such Unit, at such Unit Owner's sole cost and expense.

The cost of snow removal from Common Elements shall be a Common Expense. All maintenance and repairs to the Common Elements shall be performed by employees of the Condominium or by independent contractors.

Whenever, in the judgment of the Condominium Board, the Common Elements shall require additions, alterations, or improvements costing more than $25,000.00, in the aggregate, in any calendar year, such additions, alterations, or improvements shall not be made unless the same have been approved by a majority vote of all the Unit Owners (including Sponsor, if it then owns any Unit) at a duly constituted Unit Owner's meeting and by the representatives of mortgagee of Units, if any, appointed pursuant to the By-Laws (the "Mortgage Representatives"). If approved, the Condominium Board may, in its discretion, assess each Unit Owner his or her pro rata share of the cost of such additions, alterations, or improvements according to his or her Common Interest, as part of the Common Charges. Any additions, alterations, or improvements costing $25,000.00 or less, in the aggregate, in any calendar year may be made by the Condominium Board without the approval of the Unit Owners or the Mortgage Representatives, if any, and the cost thereof shall constitute a Common Expense. Notwithstanding the foregoing, for a period of five (5) years after the closing of the first Unit, or as long as Sponsor or its designee or both shall collectively own Units representing at least twenty-five percent (25%) or more in number or in common interests, no additions, alterations, or improvements shall be made to the Common Elements, regardless of the cost thereof, unless the consent of the Sponsor or its designees is first obtained, unless same is required by law or is necessary for the health or safety (but not the general comfort or welfare) of the residents of the Building.

F. Insurance

The Condominium Board shall maintain fire insurance policies insuring the Building (including all Units and the bathroom and kitchen fixtures installed therein on the date of recording the Declaration and all service machinery contained therein, but not including appliances or any furniture, furnishings, or other personal property supplied or installed by the Unit Owners or tenants of Unit Owners), and covering the interests of the Condominium, the Condominium Board, a majority the Unit Owners and the holders of all Permitted Mortgages (the "Permitted Mortgagee"), as their replacement value of the Building (exclusive of excavation and foundations), without deduction for depreciation. Each of such policies shall contain a New York Standard Mortgagee clause in favor of each Permitted Mortgagee, which shall provide that the loss proceeds, if any, thereunder shall be payable to such Permitted Mortgagee as its interest may appear; subject, however, to the loss payment provisions in favor of the Condominium Board and the Insurance Trustee (hereinafter defined) as set forth below. The cost of all such insurance shall be paid by the Condominium Board and shall be borne by the Unit Owners as part of the Common Charges.

The following insurance, listed in the section "Schedule B", is available for the Property for the first year of condominium operations as set forth in a letter, dated May 3, 2019, from

Cortland Insurance Agency, Inc., a licensed insurance broker with an address at Brooklyn, NY 11230:

Items Covered	Coverage Limits
Building	$1,500,000.00 All Risk, 100% Replacement Cost No Co-Insurance
Deductible:	$2,500.00
General Liability	$1,000.000.00 Each Occurrence $2,000,000.00 Aggregate
Officers and Directors Liability	Included
Projected Annual Premium	**$4,800.00**

Coverage for the following items is not included and may be available at extra cost: rent insurance; water damage; excess liability; auto liability; fidelity bond; and garage keeper's liability. Excess liability coverage of $1,000,000.00 is available for $1,800.00 per year and Worker's Compensation for a part time employee (if applicable) is available for approximately $2,000.00 per year.

The proceeds of all such policies of physical damage insurance shall be payable to the Condominium Board. Such proceeds shall be applied for the purpose of repairing, restoring or rebuilding the Building, unless otherwise determined by Unit Owners. In no event shall such proceeds be paid to the holder of any mortgage placed by a Unit Owner on his or her Unit unless, in accordance with the provisions of Section 5.5 of the By-Laws, there shall be a determination not to rebuild the Building.

All policies of physical damage insurance shall contain waivers of subrogation and of any defense based on co-insurance or on invalidity arising from any acts of the insured and of pro rata reduction of liability and shall provide that such policies may not be cancelled or substantially modified without at least ten (10) days' written notice to all of the insured, including Unit Owners, the Condominium Board and Permitted Mortgagee. Each Unit Owner shall be named as an additional insured on all such policies. Duplicate originals of all policies of physical damage insurance and of all renewals thereof, together with proof of payment of premiums, shall be delivered to all Permitted Mortgagee ten (10) days prior to expiration of the then current policies, and Unit Owner shall receive a certificate of such insurance.

The Condominium Board shall also maintain, to the extent obtainable: (a) public liability insurance as to personal injury and property damage in such limits and amounts as the Condominium Board may from time to time determine, covering each member of the Condominium Board, and the Managing Agent or manager (if any) and each of the Unit Owners; (b) rent insurance in an amount equal to the Common Charges for one (1) year; (c) workers' compensation and New York State disability benefits insurance; (d) hazard insurance; and (e) such other insurance as the Condominium Board may from time to time determine. Such public liability insurance will also cover cross-liability claims of one insurer against another. However, such insurance will not cover the individual liability of a Unit Owner arising from any occurrence within his or her own Unit.

Any insurance maintained by the Condominium Board may provide for such deductible

amounts as the Condominium Board may determine. The cost of all such insurance shall be paid by the Condominium Board and shall be borne by all Unit Owners as part of the Common Charges. In the event of any uncovered claim or damage the Board may need to assess a special assessment to the Unit owners to be able to pay for the claim and or damage.

Until the first meeting of the Condominium Board elected by the Unit Owners, the public liability insurance will be in an amount of $1,000,000.00 per occurrence or $2,000,000.00 aggregate covering all claims for personal injury or property damage in respect of any one occurrence, and the fire insurance will be at least in the amount set forth in Schedule B, the "Budget for the First Year of Condominium Operation." The Condominium Board shall review such limits annually.

Unit Owners shall not be prohibited from carrying other insurance for their own benefit, provided that such policies contain waivers of subrogation and provided, further, that the liability of the carriers issuing insurance procured by the Condominium Board shall not be affected or diminished by reason of any Unit Owner's other insurance. A Unit Owner should consider maintaining, at his or her own expense: (a) separate insurance on the contents (i.e., furniture and other personal property and belongings) in his or her Unit, in such amount as will be adequate to insure against loss by reason of fire or other casualty; and (b) liability insurance against claims for personal injury or property damage resulting from occurrences in his or her Unit.

G. Repair or Restoration after Fire or Other Casualty

Except as set forth in the next paragraph, in the event that the Building or any of the Common Elements thereof is damaged or destroyed by fire or other casualty, the Condominium Board will arrange for the prompt repair and restoration thereof.

If the insurance proceeds are insufficient to cover the cost of repairs or restorations of the building or any Common Elements thereof, the Condominium Board may assess all Unit Owners for such deficit as a Common Expense. Any surplus insurance proceeds shall be paid to all Unit Owners in proportion to their respective Common Interests, except that no payment shall be made to a Unit Owner until there has first been paid, out of his or her share of such funds, such amounts as may be necessary to reduce unpaid liens on his or her Unit (other than mortgages that are not Permitted Mortgages) in the order of priority of such liens.

If a Unit is damaged by casualty and the proceeds of insurance obtained by the Condominium Board are not sufficient to cover the repair of the Unit, the amount necessary to restore the Unit over and above the proceeds from any fire insurance on the Building will be an expense of the individual Unit Owner. In order to protect himself against the possibility of such an expense, the Unit Owner should obtain additional fire insurance coverage above and beyond that coverage maintained by the Condominium Board.

If seventy-five (75%) percent or more of the Building is destroyed or substantially damaged and if all Unit Owners do not promptly resolve to proceed with the repair or restoration thereof, the Building will not be repaired and shall be subject to an action for partition instituted by any Unit Owner or lienor, as if owned in common, in which case the net proceeds of the resulting sale, together with the net proceeds of insurance policies, shall be divided among all Unit Owners in accordance with the factors set out in the New York State Condominium Act Section 339-i(1)(iv),

which is based on floor space, subject to the location of such space and the additional factors of relative value to other space in the Condominium, the uniqueness of the Unit, the availability of common elements for exclusive or shared use, and overall dimensions of the particular Unit and the fair market value of such Unit. In the event of any dispute, the issue shall be presented for arbitration in accordance with Article 10 of the By-Laws. No payment shall be made to a Unit Owner until there has first been paid, out of his or her share of such funds, such amounts as may be necessary to discharge all unpaid liens on his or her Unit (other than mortgages that are not Permitted Mortgages) in the order of the priority of such liens. If Sponsor or its designee is then a Unit owner, it will have the right to vote at any meeting of Unit Owners called for the purpose of deciding whether or not to proceed with the restoration or repair of the Building.

H. Units Acquired by the Condominium Board

All Units acquired or leased by the Condominium Board or its designee shall be held by the Condominium Board or its designee on behalf of all Unit Owners. Any rent, purchase price, closing costs and closing adjustments payable in connection therewith shall be assessed against all Unit Owners as a Common Expense. No Units held by the Condominium Board or its designee shall carry voting rights. The Condominium Board shall not have any right of first refusal for the purchase of any Unit.

I. Termination of Condominium; Partition of Common Elements

The Condominium shall continue (unless terminated by casualty loss, condemnation, or eminent domain as provided by the By-Laws) until such time as the Property shall be withdrawn from the provisions of the Condominium Act as a result of the vote to do so by at least eighty percent (80%) of the vote, taken in accordance with the By-Laws. In addition, the written consent of the Mortgage Representatives, if any, shall be required before such vote is effective. In the event of withdrawal, the Property shall be subject to an action for partition by any Unit Owner or any lienor as if owned in common, in which event the net proceeds of the sale resulting therefrom shall be divided among all Unit Owners in accordance with the value of each of the Units. In the event of any dispute, the issue shall be presented for arbitration in accordance with Article 10 of the By-Laws. Before paying any of the proceeds to a Unit owner, the shares of such proceeds payable to such Unit owner shall first be applied to the payment of any liens on his or her Unit, in the order of priority of such liens.

J. Reports to Unit Owners

All Unit Owners will receive annually copies of an annual report of the Condominium including a balance sheet and profit and loss statement certified by a certified public accountant (as long as the Sponsor is in control of the Condominium Board), a statement regarding any taxable income attributable to the Unit Owners and ten (10) to thirty (30) days prior notice of the holding of the Annual Unit Owners' meeting. In addition, it is the obligation of the Condominium Board to give all Unit Owners annually a copy of the proposed annual budget of the condominium ten (15) days prior to the date set for the adoption of such budget.

K. Review of Real Estate Assessments

The Condominium Board will be responsible for reviewing, appealing and filing any

documents necessary for obtaining a reduction in the tax assessment and will file such documents on behalf of all the owners. Such owners shall execute any documents required for such filing.

After the Units have been separately assessed, tax review for each Unit will be the responsibility of the Unit Owner.

L. Covenant against Partition of Common Elements

The Common Elements are not subject to partition nor are they severable from the Units except in accordance with the Real Property Law.

M. Capital Reserves

The Condominium Board has the power to accumulate reserve funds for capital replacements or other purposes in accordance with the Declaration and By-Laws, as set forth in Documents 6 and 7 in Part II of the Offering Plan.

N. Arbitration

In order to resolve any dispute, controversy, claim or question arising with respect to the Condominium, or to break any deadlock in voting, the parties shall submit such dispute or question to arbitration. If the parties cannot agree on the arbitrators or if the arbitration procedure has not commenced for any other reason within ninety (90) days of the original notice, then such dispute or question shall be submitted to the American Arbitration Association, which will give any party the rights he is entitled to under New York law. The decision of the arbitrators so chosen shall be given within thirty (30) days after their selection or appointment. The fees, costs and expenses of the arbitrators shall be shared equally by the disputants. Each disputant shall also bear the fees and expenses of his or her counsel and expert witnesses. Nothing contained in this paragraph shall be construed to preclude any purchaser's rights under Article 23-A of the GBL. See Section 10 of the By-Laws attached as Document No. 7 in Part II of the Offering Plan.

The Condominium Board shall follow the directions of the Arbitrators. The panel will have the authority to file their decision with the Court under the New York Arbitration Law and Article 75 of the CPLR. Any decision or award rendered shall be final and conclusive upon the parties and a judgment thereon may be entered in a court of competent jurisdiction. The decision shall be enforceable in a court of competent jurisdiction.

U. RIGHTS AND OBLIGATIONS OF UNIT OWNERS & CONDOMINIUM BOARD

Sales and Leases of Units

Each owner of a Unit may sell or lease his or her Unit; provided, however, that such owner first gives the Condominium Board written notice of his or her intention to do so, which notice shall be accompanied by a fully executed copy of the contract of sale or lease, as the case may be, containing all of the terms offered in good faith by the prospective purchaser or lessee.

Mortgages of Units

Each Unit owner has the right to mortgage his or her Unit, provided that, with respect to Units other than the Unsold Units, the conditions with respect thereto set forth in Article 8 of the By-Laws are first complied with. As more fully set forth in said Article 8, these conditions include the requirements that:

(a) no Unit Owner shall be permitted to mortgage, pledge or hypothecate his or her Unit unless and until he or she shall have paid in full to the Condominium Board all unpaid Common Charges and special assessments theretofore assessed against such Unit and shall have satisfied all unpaid liens, except the liens of Permitted Mortgages levied against such Unit;

(b) no Unit Owner shall execute any mortgage or other document mortgaging, pledging or hypothecating title to his or her Unit without including therein its Appurtenant Interests, it being the intention to prevent any severance of such combined ownership. Any mortgage or other instrument purporting to affect one or more of such interests without including all such interests shall be deemed and taken to include the interest or interests so omitted, even though the latter shall not be expressly mentioned or described therein so that at all times, all of the Units interests in the Condominium shall remain and shall not be severed;

(c) any mortgage covering a Unit shall be substantially in the form of the New York statutory form of mortgage, except for such changes or additions as may be required to permit a lender to make the loan;

(d) The Condominium Board is notified in writing of the making of such mortgage and is given a copy thereof.

Sponsor or its designee, as the owner of Unsold Units, shall have the right to mortgage the Unsold Units without any restriction or limitation, except that the Condominium Board is required to be notified in writing of the making of such mortgage and is to be given a copy thereof.

Capital Reserves

The Condominium Board has the power to accumulate reserve funds for capital replacements or other purposes to meet the needs of the Condominium in accordance with the Declaration and By-Laws, as set forth in Documents 6 and 7 in Part II of the Offering Plan. There are no restrictions on these powers.

Common Charges: Assessment, Collection and Lien for Non-Payment

The Condominium Board will commence to collect the Common Charges upon the closing of title to the first Unit. Furthermore the Condominium Board will prepare and distribute to all Unit Owners, at least annually, a budget setting forth its projection of the Common Expenses for the coming fiscal year of the Condominium. Such Common Expenses will include, among other things:

(a) all costs and expenses in connection with the repair, maintenance, replacement, restoration and operation of, and any alteration, addition, or improvement to, the Common Elements;

(b) water charges and sewer rents in connection with the Building (unless the same are separately assessed to individual Units);

(c) real estate taxes and assessments levied with respect to the Property (until the same are separately assessed to individual Units); and

(d) amounts for such other items as the Condominium Board may deem proper (such as amounts for reserves, to make up deficits for prior years, to prepay indebtedness of the Condominium, or to purchase or lease Units).

Based upon such budget, the Condominium Board will promptly determine and advise each Unit Owner of the Common Charges payable by such Unit Owner during the ensuing fiscal year, which Common Charges shall represent a portion of the projected Common Expenses of the Condominium assessed to such Unit Owner prorated according to the Common Interest of his or her Unit.

Pursuant to the terms of Article 6 of the By-Laws, the Condominium Board has the right to revise its projection of the Common Expenses at any time and from time to time during any fiscal year of the Condominium. Any such revision may result in an increase or decrease in the amount of Common Charges payable by Unit Owners during such fiscal year. However, no such revision shall have a retroactive effect on the amount Common Charges payable by Unit Owners prior to the date of such new determination.

Unless otherwise determined by the Condominium Board, Common Charges will be payable in monthly installments, in advance, on the first day of each month. No Unit Owner will be relieved from liability for the payment of his or her Common Charges by waiving the use of any of the Common Elements or by mere abandonment of his or her Unit. No Unit Owner, however, will be liable for the payment of any part of the Common Charges assessed against his or her Unit subsequent to a permissible sale and transfer, or other conveyance by him or her of such Unit.

Any Unit Owner may, by conveying his or her Unit, without consideration, to the Condominium Board and complying with certain conditions set forth in the By-Laws in connection therewith, exempt himself or herself from Common Charges thereafter accruing. Such conditions include the payment of all Common Charges and assessments then due and payable with respect to his or her Unit and such Unit being free and clear of all liens and encumbrances other than any statutory lien for unpaid Common Charges. However, in no event shall Sponsor or its designee be permitted to convey any Unsold Unit to the Condominium Board and thereby exempt itself from Common Charges attributable to such Unit thereafter accruing, unless:

(a) the aggregate Common Interests appertaining to the Unsold Units constitutes fifteen (15%) percent or less of the total Common Interests appertaining to all Units;

(b) at least five (5) years have elapsed since the First Closing; and

(c) at the time of conveyance, Sponsor shall pay the Condominium Board a sum equal to the product of the then current monthly Common Charges for the Unsold Units being conveyed multiplied by 24.

On a resale of any Unit, the purchaser of such Unit shall be required to pay unpaid Common Charges assessed against such Unit prior to his or her acquisition, except that a mortgagee acquiring title to a mortgaged Unit or a purchaser at a mortgage foreclosure sale shall not be liable, and such mortgaged Unit shall not be subject to, a lien for the payment of any Common Charges assessed subsequent to the recording of such mortgage and prior to the acquisition of title to such Unit by the mortgagee or a purchaser at a mortgage foreclosure sale and such assessments shall be the liability of the owner of the Unit at the time of the assessments. In the event that the Condominium Board forecloses its statutory lien on any Unit for unpaid Common Charges and the net proceeds of the foreclosure sale shall not be sufficient to pay such unpaid Common Charges, or if such Unit is acquired by a mortgagee or purchaser at a mortgage foreclosure sale, then, in either event, the defaulting Unit Owner shall remain personally liable for the balance of such unpaid Common Charges. The Condominium Board shall have the right to assess such unpaid balance amongst all those who are Unit Owners at the time that the same is levied.

Under the provision of Section 339-z of the Real Property Law, and Article 6 of the By-Laws, the Condominium Board will have a lien, on behalf of all Unit Owners, on each Unit for unpaid Common Charges and expenses assessed against such Unit together with interest and costs thereon. All such liens, however, will be subordinate, to the extent required by applicable law, to any liens for real estate taxes and assessments on such Unit.

Any lien for unpaid Common Charges and expenses against a Unit will be effective from and after filing of a verified notice thereof in the Register's Office and until all sums secured thereby, with interest and costs accrued thereon, shall have been fully paid, or until six (6) years from the date of filing (unless foreclosure of such lien is started within such six-year period), whichever shall be sooner. Such liens may be foreclosed by a suit brought in the name of the Condominium Board (acting on behalf of all Unit Owners) in like manner as the foreclosure of a mortgage on real property, or an action may be brought by the Condominium Board to recover unpaid Common Charges without foreclosing the lien.

In accordance with Section 339-aa of the Real Property Law, while the Sponsor is in control of the Condominium Board, the Sponsor will cause the Condominium Board to file a lien on Units in which Sponsor is more than thirty (30) days in arrears of common charges.

Failure by Non-Occupying Owner to Make Payments on its Unit

Section 339-kk of the Real Property Law of the State of New York (the "Condominium Act") applies to all condominium plans in existence after July 22, 1998. It is intended to provide financial protection for a condominium association if a non-occupying owner fails to make monthly payments for its Units. The terms of Section 339-kk are as follows:

For purposes of this section, "non-occupying owner" means a condominium Unit owner who does not occupy the dwelling Unit.

If a non-occupying owner rents any dwelling Unit to a rental tenant and then fails to make payments due for common charges, assessments or late fees for such Unit within 60 days of the expiration of any grace period after they are due, the Condominium Board shall provide written notice to the tenant and the non-occupying owner that rental payments from the tenant shall be paid directly to the Condominium Board.

Such notice shall provide that commencing immediately and until such time as all such payments are made current, all rental payments due subsequent to the issuance of such notice are to be made to the Condominium Association at the address listed on the notice. However, where a majority of the Condominium Board has been elected by Unit Owners who are in occupancy, the Board may elect not to require that rental payments be made payable to the Condominium Board.

When such payments from the non-occupying owner are once again current, written notice of this fact shall be given within three (3) business days to the rental tenant and non-occupying owner; thereafter, all rental payments shall be made payable to the non-occupying owner or a designated agent.

A non-occupying owner who disputes the Board's claim to rental payments pursuant to Section 339-kk shall be entitled to present facts supporting such position at the next scheduled meeting of the Condominium Board, which must be held within thirty (30) days of the date that such Board receives notice that such owner seeks to dispute such claim.

Nothing in Section 339-kk shall limit any rights of Unit Owners or of the Condominium Board existing under any other law or agreement.

Payment by a rental tenant to the Condominium Board made in connection with Section 339-kk shall relieve that rental tenant from the obligation to pay such rent to the non-occupying owner and shall be an absolute defense in any non-payment proceeding commenced by such non-occupying owner against such tenant for such rent.

Repair and Maintenance of Units and Common Elements

Each Unit and all portions of the Common Elements shall be kept in first-class (same as new, excepting normal wear and tear) condition, order and repair (and free of snow, ice and accumulation of water with respect to any terrace, patio, roof or other part of the Property exposes to the elements) by the Unit Owner or the Condominium Board, whichever is responsible for the maintenance thereof and such Unit Owner or the Condominium Board, as the case may be, shall promptly make or perform, or cause to be made or performed, all maintenance work that is necessary in connection therewith. In the event that any Unit Owner fails to keep his or her Unit in such condition, the Condominium Board may, at the expense of such Unit Owner, enter his or her Unit to perform such acts as are necessary to cure such default. (See the subsection entitled

"Rights of Access" for a further discussion).

Subject to the rights of existing tenants and other occupants of Unsold Units, each Unit Owner shall grant to the Condominium Board, the Managing Agent and/or any other person authorized by any of the foregoing a right of access (to be exercised in a reasonable manner) to his or her Unit for the purposes of: making inspections, removing violations against the Common Elements or any part of the Property, making general repairs, curing defaults by the Unit Owner and for other purposes permitted by the By-Laws.

Generally, all painting, decorating, maintenance, repairs and replacements, whether structural or non-structural, ordinary or extraordinary: (a) in or to any Unit (other than the Common Elements contained therein) shall be performed by the Owner of such Unit at his or her sole cost and expense; (b) in or to the Common Elements shall be performed by the Condominium Board as a Common Expense; (c) in or to the Limited Common Elements shall be performed (i) by the Condominium Board and the cost and expense thereof will be charged to all Unit Owners as a Common Expense, if involving structural or extraordinary maintenance, repair or replacement, (except if necessitated by the negligent act or omission of the Unit Owner) or (ii) by the Unit Owner having direct and exclusive access thereto at such Unit Owner's sole cost and expense, if involving painting, decorating, and non-structural ordinary maintenance, repairs and replacements.

If the hallway appurtenant to a Unit is utilized by a single Unit Owner, such Unit Owner shall have the right to modify the decor of such hallway, provided that such decor is in keeping with the décor of the Condominium. Such Unit Owner shall be responsible, at its sole cost and expense, for all maintenance, repairs, replacements and upkeep of the common hallway and the furnishings located thereon.

Any Unit Owner having access to an outdoor Limited Common Element shall keep such area free of snow, ice and accumulation of water. In order to promote a consistent appearance of the Building from the outside, no Unit Owner shall be permitted to enclose, erect a greenhouse and/or alter a Limited Common Element appurtenant to a Unit in such a way that will alter the conformity of the Building, without the prior approval of the Condominium Board.

In connection with the foregoing, it should be noted that the exterior glass surfaces of all windows located in any Unit are to be washed and cleaned by the owner of such Unit, at such Unit Owner's sole cost and expense.

Notwithstanding the foregoing, however, all maintenance, repairs and replacements to the Common Elements, whether structural or non-structural, ordinary or non-extraordinary, that are necessitated by the negligence, misuse, or abuse of a Unit Owner, will be made by such Unit Owner at his or her sole cost and expense.

Alterations and Improvements of Units, Limited Common Elements and Common Elements

Upon Condominium Board approval, each Unit Owner shall have the right to:

(i) change the layout, make alterations, additions, or improvements in the interior of his unit;

(ii) make alterations, additions, or improvements in the interior (i.e. enclosed storage spaces and other spaces that have no effect on the aesthetic of the Building) of any part of the property allocated to his unit;

(iii)change the layout of his unit;

provided, however, that, with respect to any such alteration, addition, improvement or change in, to, of or upon a Unit:

(1) no physical modification shall be made to any other Unit, and the Common Interest or interior dimensions of any other Unit shall not be changed by reason thereof, unless the owner of such other affected Unit shall consent thereto;

(2) the Unit Owner shall agree to hold the Condominium Board and all other Unit Owners harmless from any liability arising therefrom; and

(3) such alteration, addition, improvement or change shall not jeopardize the soundness or structural integrity of any part of the Building or the safety of any tenant or other persons at the Property.

In the event that any Unit is subdivided, the subdivided Units shall jointly exercise and share the vote allocated to the original Unit.

In connection therewith, the Condominium Board, on behalf of the Unit Owner, shall execute any applications to any departments or to any governmental agencies having jurisdiction thereof, for any and all permits required in connection the making of alterations, additions, improvements, or repairs in or to a Unit, provided however that Condominium Board approval shall be required prior to any work of a structural nature.

Alterations and Improvements of Common Elements:

Generally, all alterations, additions, or improvements in or to the Common Elements will be made by the Condominium Board, and the cost and expense thereof will be charged to the Unit Owners as a Common Expense.

Except as otherwise provided in the By-Laws, no Unit Owner may make any alteration, addition, improvement, or repair in or to the Common Elements.

Sponsor or its designee or the owners of the Units shall have the right, without the approval of the Condominium Board, the Selling Agent, the Managing Agent, other Unit Owners, or representatives of holders of mortgages on Units to:

(a) make alterations, additions, improvements, or repairs in or to any Unsold Unit or Units, whether structural or non-structural, interior or exterior, ordinary or extraordinary; and

(b) subdivide, combine and change the boundary walls of Unsold Unit or Units. (See Section Changes in Prices and Units" for further discussion.)

However, no change will be made in the size or number of Units and/or their respective percentages of common interest, and no material change will be made in the size or quality of common elements, except by amendment to the Plan and, when applicable, the declaration.

In addition, the Sponsor may not substitute equipment or materials of lesser quality and design, nor may the Sponsor change the size, location of building or Units, other improvements or common elements if such changes affect the percentage of common interests or adversely affect the value of any Unit to which title has closed or for which a purchase agreement has been executed and is in effect unless all affected Unit Owners and contract vendees consent in writing to such change.

At the request of the Sponsor or its designee or the Unit Owner, the Condominium Board will execute any application or other documents required to be filed with any governmental authority having or asserting jurisdiction in connection with any addition, alteration, improvement, or repair proposed to be made by the Sponsor or Unit Owner, at which time Sponsor or the Unit Owner shall execute an agreement to indemnify and hold harmless the Condominium Board and the Unit Owners from any expense or liability by virtue of the execution of the application or such other documents.

Insurance Coverage

If a Unit is damaged by casualty and the proceeds of insurance obtained by the Condominium Board are not sufficient to cover the repair of the Unit, the amount necessary to restore the Unit over and above the proceeds from any fire insurance on the Building will be an expense of the individual Unit Owner. In order to protect himself against the possibility of such an expense, the Unit Owner should obtain additional fire insurance coverage above and beyond that coverage maintained by the Condominium Board. In the event of any uncovered claim or damage the Board may need to assess a special assessment to the Unit owners to be able to pay for the claim and or damage. See subsection "Repair or Restoration after Fire or Other Casualty", under the Section entitled: "Rights and Obligations of the Condominium Board."

The Insurance policy listed in the section "Schedule B" includes the following coverage:

Items Covered	**Coverage Limits**
Building	$1,500,000.00 All Risk, 100% Replacement Cost No Co-Insurance
Deductible:	$2,500.00
General Liability	$1,000.000.00 Each Occurrence $2,000,000.00 Aggregate
Officers and Directors Liability	Included
Projected Annual Premium	**$4,800.00**

Coverage for the following items is not included and may be available at extra cost: rent insurance; water damage; excess liability; auto liability; fidelity bond; and garage keeper's liability. Excess liability coverage of $1,000,000.00 is available for $1,800.00 per year and Worker's Compensation for a part time employee (if applicable) is available for approximately $2,000.00 per year.

Except as set forth in the next paragraph, in the event that the Building or any of the Common Elements thereof is damaged or destroyed by fire or other casualty, the Condominium Board will arrange for the prompt repair and restoration thereof.

If the insurance proceeds are insufficient to cover the cost of repairs or restorations of the building or any Common Elements thereof, the Condominium Board may assess all Unit Owners for such deficit as a Common Expense. Any surplus insurance proceeds shall be paid to all Unit Owners in proportion to their respective Common Interests, except that no payment shall be made to a Unit Owner until there has first been paid, out of his or her share of such funds, such amounts as may be necessary to reduce unpaid liens on his or her Unit (other than mortgages that are not Permitted Mortgages) in the order of priority of such liens.

If a Unit is damaged by casualty and the proceeds of insurance obtained by the Condominium Board are not sufficient to cover the repair of the Unit, the amount necessary to restore the Unit over and above the proceeds from any fire insurance on the Building will be an expense of the individual Unit Owner. In order to protect himself against the possibility of such an expense, the Unit Owner should obtain additional fire insurance coverage above and beyond that coverage maintained by the Condominium Board.

(I) In the event that either (i) the Building or any part thereof is damaged or destroyed by fire or other casualty (hereinafter referred to as a "Casualty Loss") or (ii) the Common Elements or any part thereof is taken in condemnation or by eminent domain (hereinafter referred to as a "Taking"), the net insurance proceeds payable under the insurance policies maintained by the Condominium Board by reason of such Casualty Loss or the net condemnation awards receivable by reason of such Taking, as the case may be, shall be payable to the Condominium Board. In either instance, all such monies actually received (hereinafter referred to as the "Trust Funds") shall be held in trust for the benefit of all Unit Owners and their Permitted Mortgagee and shall be disbursed pursuant to the terms of this Section. Notwithstanding anything to the contrary contained either in this paragraph (I) or elsewhere in this Section, however, no Unit Owner whose Unit, or any portion thereof, is taken in condemnation or by eminent domain (whether or not all or a part of the Common Elements are contemporaneously taken) shall be deemed to have waived whatever rights that he or she may have to pursue a separate claim against the condemning authority by reason thereof.

(II) Subject to the terms of paragraph (IV) hereof, the Condominium Board shall arrange for the prompt repair or restoration (hereinafter referred to as the "Work" of: (i) in the event of a Casualty Loss, the portion(s) of the Building (including all Units and the bathroom and kitchen fixtures installed therein on the date of recording the Declaration and all service machinery contained therein, but not including appliances or any furniture, furnishings, decorations, belongings, or other personal property supplied or installed by either Unit Owners or the tenants of Unit Owners) affected by such Casualty Loss or (ii) in the event of a Taking, the portion(s) of the Common Elements affected by such Taking. If, pursuant to the immediately preceding sentence, work is to be performed in or to Units, Common Elements that service or enclose Units and other Common Elements, or any combination of the foregoing, the work shall be performed, to the extent practicable, first in or to the Units, next in or to the Common Elements that service or enclose Units and then in or to the balance of the Common Elements. In addition, each Unit Owner whose

Unit, or any portion thereof, shall be the subject of all or part of any Work shall have the right, subject to the terms of Section 5.2 of the By-Laws in Part II, to supervise any redecorating of his or her Unit.

(III) In the event that Work shall be performed pursuant to the terms of paragraphs (II) and (IV) of this Section, the Condominium Board or the Insurance Trustee, as the case may be, shall disburse the Trust Funds to the contractors engaged in the Work in appropriate progress payments. If the Trust Funds shall be less than sufficient to discharge the cost and expense of performing the Work, the Condominium Board shall levy a Special Assessment against all Unit Owners for the amount of such deficiency in proportion to their respective Common Interests, and all proceeds of such Special Assessment shall become part of the Trust Funds. However, if the insurance proceeds are not sufficient to discharge the cost and expense of performing any work attributable to any part of the building which is not a "Common Element", such cost and expense must be paid by the owner or owners of the Units or Limited Common Element which were damaged and no special assessment may be levied against the Unit Owners. If, conversely, the Trust Funds shall prove to be more than sufficient to discharge the cost and expense of performing the Work, such excess shall be paid to the Unit Owner of the damaged Unit, except that no payment shall be made to a Unit Owner until there has first been paid, out of said excess, such amounts as may be necessary to reduce unpaid liens on the Unit Owner's Unit (other than mortgages that are not Permitted Mortgages) in the order of priority of such liens. Notwithstanding the foregoing, however, in the event that the Unit Owners are assessed pursuant to the terms of the second sentence of this paragraph (III) for any projected deficiency in the amount of the Trust Funds available to the Condominium Board and, after the payment of all costs and expenses incurred in connection with the Work, any portion of the Trust Funds remains unspent, such excess Trust Funds shall, to the extent of such Special Assessment, be deemed to be, and shall constitute, an unspent Special Assessment and shall be paid to the Unit Owners so assessed in proportion to their respective Common Interests, free of any claim of any lienor (including, without limitation, any Permitted Mortgagee).

In the event that the damage is caused to both a Unit and Common Elements, the Condominium Board shall retain the services of an insurance adjuster to determine the amount of damages caused separately by the Unit and Common Element and all the underpayments and overpayments shall be subject to provisions in paragraph (IV).

(IV) If seventy-five (75%) percent or more of the Building is destroyed or substantially damaged and if all Unit Owners do not promptly resolve to proceed with the repair or restoration thereof, the Building will not be repaired and shall be subject to an action for partition instituted by any Unit Owner or lienor, as if owned in common, in which case the net proceeds of the resulting sale, together with the net proceeds of insurance policies, shall be divided among all Unit Owners in accordance with the factors set out in the New York State Condominium Act Section 339-i(1)(iv), which is based on floor space, subject to the location of such space and the additional factors of relative value to other space in the Condominium, the uniqueness of the Unit, the availability of common elements for exclusive or shared use, and overall dimensions of the particular Unit and the fair market value of such Unit. In the event of any dispute, the issue shall be presented for arbitration in accordance with Article 10 of the By-Laws. No payment shall be made to a Unit Owner

until there has first been paid, out of his or her share of such funds, such amounts as may be necessary to discharge all unpaid liens on his or her Unit (other than mortgages that are not Permitted Mortgages) in the order of the priority of such liens. If Sponsor or its designee is then a Unit owner, it will have the right to vote at any meeting of Unit Owners called for the purpose of deciding whether or not to proceed with the restoration or repair of the Building.

Restrictions on the Use of Units

As more fully set forth in the Declaration and in the By-Laws, each Unit may be used in accordance with the use permitted by local law and zoning regulations and the Certificate of Occupancy.

No bird, reptile, or animal shall be permitted, raised, bred, kept, or harbored in the Building unless, in each instance, the same shall have been expressly consented to in writing by the Condominium Board or the Managing Agent, which consent shall not be unreasonably withheld. There are no aesthetic controls in the building. The Units and common elements are limited to residential use and no business or professional use may be carried on in the Units. Such limitations are more restrictive than those applicable to the Sponsor. The Sponsor may, without obtaining the consent of the Condominium Board or the other Unit Owners, use any one or more of such Units as model Units and sales and/or promotion offices in connection with the sale of the Unsold Units or for any other purpose, subject only to compliance with current laws, statutes or regulations.

A Unit owned or leased by an individual, corporation, partnership, fiduciary, or other entity may be occupied only by said individual, or by an officer, director, stockholder, or employee of such corporation, or by a partner or employee of such partnership, or by said fiduciary (including officers, directors, stockholders, or employees or corporate fiduciaries), or by the beneficiary of said fiduciary, or by a principal or employee of such entity, respectively, or by members of the immediate family or guests of any of the foregoing. However, the foregoing restriction shall not apply to Unsold Units.

No nuisance, or immoral, improper, offensive, or unlawful use, shall be allowed in the Building or any portion thereof. All valid laws, zoning ordinances and regulations of governmental bodies having jurisdiction thereof, relating to any portion of the Property, shall be complied with at the sole expense of the respective Unit Owners or the Condominium Board, whomever shall have the obligation to maintain or repair such portion of the Property. The Rules and Regulations of the Condominium, which govern the use of all of the Units, may be amended from time to time by the Condominium Board, provided that copies of such amendments are furnished to each Unit Owner prior to the time that they become effective. For further discussion, see the "Addendum to the Bylaws - Rules and Regulations" attached as part of Document No. 7 in Part II of the Plan.

Smoking, which includes carrying, burning, or otherwise handling or controlling any lit or smoldering product containing tobacco or cloves, including but not limited to cigarettes, cigars, pipes or electronic cigarettes, shall be permitted only inside a Unit or in an outdoor Limited Common Element that is connected to a Unit. Smoking anywhere else in the Condominium shall be prohibited, including, but not limited to, in indoor and outdoor Common Elements. No Unit Owner shall smoke, or permit smoking by any occupant, agent, tenant, invitee, guest, friend, or family member anywhere on the property except in their Unit or in any outdoor Limited Common

Element that is connected to the Unit. Smoking in violation of this rule shall constitute a nuisance pursuant to the terms and provisions of the By-Laws and shall be subject to a fine as reasonably determined by the Condominium Board.

Rights of Access

As more fully set forth in the By-Laws, the Condominium Board, and the Managing Agent, superintendent and other persons authorized by the Condominium Board, will have a right of access to any Unit for the purposes, among others, of making inspection of, or removing violations of governmental laws or regulations against any part of the Property, curing defaults committed by the owner of such Unit under the Condominium Documents, or correcting conditions originating in any Unit and threatening another Unit or any Common Element. In addition, Sponsor and its contractors, subcontractors, agents and employees will have a right of access to each Unit and to all of the Common Elements for purposes of performing certain alterations and repairs in or about Unsold Units and in fulfilling Sponsor's obligations under the Plan. The foregoing rights of access shall be exercised only upon not less than one day's advance notice and only in such a manner as will not unreasonably interfere with the use of the Units for their permitted purposes. In cases of emergency, however, such rights of access may be exercised immediately, without advance notice and whether or not the Unit Owner is present, as they pertain to the self-help rights disclosed herein.

Self-Help

In the event that any Unit Owner fails to maintain or repair parts of the Building required to be maintained or repaired by such Unit Owner, or in the event of any breach of the Condominium Documents, then, as set forth in Article 9 of the By-Laws, the Condominium Board shall have certain rights to perform such maintenance or repairs, or to cure such breach, at such Unit Owner's expense.

Mechanic's Liens

Under the provisions of the Condominium Act, no lien of any nature may arise or be created against the Common Elements except with the unanimous consent of all Unit Owners. Liens may arise or be created against only the several Units and their respective Common Interests. A lien for labor performed in, or materials supplied to, a Unit may be filed against the Unit of an owner who has expressly requested or consented to the performance of such work or the supplying of such materials, but may not be filed against the Unit of any other owner who has not expressly requested or consented to the same, except in the case of emergency repairs. No labor performed in, or materials furnished to, the Common Elements shall be the basis for a lien thereon, but all Common Charges received by the Condominium Board shall constitute trust funds for the purpose of paying the cost of labor performed or materials furnished at the request, or with the consent of, the Condominium Board or the Managing Agent.

Compliance with the Terms of the Declaration, the By-Laws and the Rules and Regulations

Each Unit Owner must strictly comply with the provisions of the Condominium Documents, including, but not limited to: the Declaration, By-Laws, or any other rules, regulations or requirements promulgated by the Condominium Board, and as the same may be amended,

modified, deleted, or added to from time to time pursuant to the terms thereof. Failure to strictly comply is grounds for an action for damages, including but not limited to attorney's fees, late charges and interest at the highest legal rate allowable, or injunctive relief, or both.

Restrictions on Selling/Leasing of Units

Other than as set forth herein, there is no restriction upon ownership or sale of a Unit. Any Unit Owner may sell or lease his or her Unit to anyone, without restriction or limitation, subject only to Civil Rights laws (i.e.: Seller will not discriminate in the sale or lease of Units on the basis of race, creed, sex, color, disability, marital status, sexual orientation, or national origin, or other grounds prohibited by law).

V. REAL ESTATE TAXES

After tax lots are apportioned, and the Units are separately assessed, each Unit will be taxed as a separate tax lot for real estate tax purposes and the Unit owner will not be responsible for the payment or non-payment of taxes on any other Units, nor will his or her Unit be subjected to any lien arising from the same. In the event that the Units are not separately assessed at the time of the closing, the following procedure will be applicable:

1. To the extent that the taxes have been paid by the condominium for the initial period, there will be an adjustment made at the time of the closing in the amount of the prepaid taxes with respect to this Unit. The adjustment will be based on the percentage common interest allocated to the Unit.

2. The Unit owner will be required to pay the entire amount of tax allocated to his Unit at the time that the Condominium Board is required to make its real estate tax payment to the City of New York. The allocation for taxes will be based on the unit's percentage of common interest allocated to the Unit.

   Taxes are assessed by the Real Property Assessment Bureau of the Department of Finance of the City of New York. The tax assessments of condominium apartment buildings are governed by Section 581 of the Real Property Tax Law. This law requires the tax assessor to disregard the condominium form of ownership in valuing such properties and to value the building in the same manner as similar but non-condominium owned rental buildings.

   In the event that Units have not been separately assessed for real estate tax purposes prior to the closing of title to the first Unit, the Sponsor shall place in escrow in the name of the Condominium Board an amount equal to the real estate taxes which will be levied against the property for the six (6) month period following the first closing and will collect at each Unit closing the estimated amount of taxes attributable to such Unit. The Condominium Board will pay the real estate taxes from the escrow account when taxes are due and payable, and the funder of the escrow account will be entitled to reimbursement from Unit owners to the extent of the actual assessment. The amount deposited in escrow for real estate taxes will be disclosed in all post-closing amendments until the Units are separately assessed. Until the Units have been separately assessed, all post-closing amendments shall disclose the amount of the funds deposited in escrow for the payment of real estate taxes.

   In the event that the Unit has not been separately assessed for the then current fiscal tax year at the time of closing title, the apportionment of real estate taxes shall be based on the Unit's pro rata share (in proportion to its Common Interest) of the then current real estate taxes assessed against the Property. Installments for tax assessments due after delivery of the deed (if any) shall be paid by the Purchaser and shall not be considered a defect in title

3. Sponsor has applied for Real Estate Tax exemption benefits pursuant to Section 421-a of the Real Property Tax Law under the old regime. An application for the Preliminary Certificate of Eligibility was filed on December 24, 2015. The Attorney General has recently issued a memo regarding disclosure of requirements and obligations of Sponsors and Unit Owners in Condominiums where the Sponsor has applied or plans to apply for benefits under § 421-a of the N.Y. Real Property Tax Law. In response to the memo, Sponsor makes the following

disclosures:

(a) The building situated at 1296 Park Place, Brooklyn, New York, is not located in the statute's geographic exclusion area and as such, Sponsor does not need to comply with the statute's requirements for affordable Units.

(b) The buildings are exempt from the prevailing wage requirement for Building Service Employees (as defined in N.Y. Real Prop. Tax Law §421-a[8](a)(i)) because the building contains less than fifty (50) residential Units.

(c) Sponsor intends that the buildings shall be exempted from the statutory obligation to register the units as rent-stabilized by reason of its condominium status.

(d) Sponsor has not rented/will not rent any residential units to any person [other than an interim lessee] prior to the Plan being consummated, and therefore Sponsor is not obligated to abandon the offering plan in accordance with the provisions of 13 N.Y.C.R.R. §§ 20.1(l)(2) and 20.5(g). If the Sponsor does rent any residential Unit, other than pursuant to an interim lease, prior to consummation, the Sponsor will in such event be obligated to abandon the offering plan in accordance with the provisions of 13 N.Y.C.R.R. §§ 20.1(l)(2) and 20.5(g). In addition, the Sponsor will be obligated to inform HPD of its intent to operate as a rental building; and all units will be subject to rent stabilization.

(e) The buildings will be eligible for a 15 year 421-a tax abatement pursuant to a preliminary certificate of eligibility.

(f) Sponsor will have fifteen (15) months from the date of issuance of a final certificate of eligibility from the New York City Department of Housing Preservation and Development ("HPD") to declare its Plan effective.

(g) Sponsor will use its best efforts to ensure that the tax benefits obtained will remain in effect for the duration of the benefits period including the timely compliance with all procedures required to maintain the benefits. Upon closing, the Sponsor will make all documents available to the Board of Managers for inspection and copying for the duration of the benefits. See Section "Real Estate Taxes" for more details.

Per the amended Rules & Regulations, only a portion of an apartment's billable exempt Assessed Value is now eligible for the 421-a tax exemption. The value of a Unit above this threshold ("AV cap") is ineligible to receive benefits. For units with an exempt Assessed Value above this Assessed Value cap, owners will pay taxes on the portion of Assessed Value above the cap, but still receive tax benefits on the portion of Assessed Value below the cap. The Assessed Value cap was originally set at $65,000 per Unit, however the amount has been increased by 3%, compounded annually, on each taxable status date following August 17, 2008, the first anniversary of the effective date of the State Law. As of tax year 2019/2020 the Assessed Value cap rate is $89,975. Unit 1R and Unit 4F are both above the Assessed Value cap rate.

Projects which commenced construction between June 15, 2015, and December 31, 2015 (with the issuance of New Building or Foundation Permits), are eligible to benefit from the

421-a Tax Abatement Program, only if construction will be completed no later than December 31, 2019, with the issuance of a Certificate of Occupancy. Failure to complete the project within the allotted time frame will cause the project to be ineligible for the Final 421-a Tax Abatement benefits.

4. The real estate tax estimates set forth in Schedule A are based on the opinion letter dated June 19, 2019 by Metropolitan Realty Exemptions, Inc., the Sponsor's tax expert, using the Class 2 tax rate for the 2018/2019 tax year of $12.612 per One Hundred Dollars ($100.00) of assessed valuation. The residential units will be categorized as a tax class 2. Based on the latest 2018/2019 tax rate of 12.612% (i.e., $12.612 per $100 of Assessed Value), the projected tax liabilities will be as follows after construction is complete and the building is reassessed, and will be divided for each condo Unit, the parking units and roof terrace units in accordance to the percentage of common interest:

Tax liability without 421-a abatement	
Total Assessed Value	$559,275.00
Total tax liability	$70,536.00
Tax liability with 421-a abatement	
Total Assessed Value with Cap	$25,430.00
Total tax liability with 421-a abatement	$3,207.00

NO WARRANTY IS MADE THAT THE TAX BENEFITS WILL BE OBTAINED. IN THE EVENT THAT TAX BENEFITS ARE NOT OBTAINED, OR IN THE EVENT THAT THERE ARE INCREASES IN THE TAX RATE OR THE PROPERTY'S ASSESSED VALUATION OR IN THE STATUTES GOVERNING THE TAX BENEFITS, REAL ESTATE TAXES MAY BE HIGHER THAN SET FORTH HEREIN FOR THE FIRST YEAR OF OPERATION AND IN FUTURE YEARS AND ACCORDINGLY INDIVIDUAL CARRYING COSTS FOR THE UNITS WOULD ALSO BE HIGHER.

The Condominium Board will use its best efforts to obtain the tax benefits. Sponsor will use best efforts to submit application for the Co-op/Condo Property Tax Abatement during the Sponsor Board Control Period. Purchasers will not be given a right of rescission if the condominium does not receive the tax abatement. Sponsor will cooperate with the board of managers to obtain the benefits and will keep and make available all records required in order to obtain the benefits.

Estimated real estate tax assessments are determined using various factors including sales price, square footage, location of the Unit, availability of limited common elements and/or access to common elements. No assurances can be given that the taxing authorities will assess the building and allocate the assessments in the same manner and the actual assessments may not be in the same proportion as the common interests set forth in Schedule A.

See Schedule A for the estimated real estate taxes for the Units for the first year of condominium operation. Since actual figures are not currently available, the figures set forth in Schedule A are based on estimated data.

Purchasers should note that the IRS allows homeowners to make the following deductions on their federal income tax returns: Any amount spent on property taxes, state and local income taxes up to cumulative amount of $10,000.00; All mortgage interest paid on mortgages valued at less than $750,000.00 for not more than two homes.

Since no mortgage financing is offered by Sponsor, the only deductible item is real estate taxes. If a Purchaser obtains a mortgage loan, interest on such loan is deductible under current law. The projected amount deductible may vary in future years due to changes in the assessed value, the tax rate or in the method of assessing real property which result in a change in real property taxes, or due to changes in interest rates or in the allocation of constant debt service payments to interest and principal, or such other changes as may reasonably be expected to affect deductions.

As of December 2019, no tax certiorari proceedings are pending on the premises.

Review of Real Estate Assessments

The Condominium Board will be responsible for reviewing, appealing and filing any documents necessary for obtaining a reduction in the tax assessment and will file such documents on behalf of all of the owners. Such owners shall execute any documents required for such filing.

After the Units have been separately assessed, tax review for each Unit will be the responsibility of the Unit Owner.

THERE IS NO ASSURANCE THAT THE TAXING AUTHORITY WILL ASSESS THE MINIMUM TAX PAYABLE WITH RESPECT TO THE UNITS, IF ANY, IN PROPORTION TO EACH UNIT'S COMMON INTEREST (AND IF NOT SO ASSESSED, UNITS HAVING THE SAME COMMON INTEREST MAY PAY DIFFERENT REAL ESTATE TAXES).

DUE TO THE POSSIBLE FURTHER INCREASES IN THE 2019/2020 AND 2020/2021 TAX RATES AND/OR POSSIBLE FURTHER INCREASES IN THE PROPERTY'S TAX-EXEMPT VALUATION, REAL ESTATE TAXES MAY BE HIGHER THAN AS SET FORTH FOR THE FIRST YEAR OF OPERATION AND IN THE FUTURE YEARS

Tax Treatment of Condominium and Board of Managers

Under the Plan, each Condominium, via the Board of Managers, will determine, assess to, and collect from, its Unit Owners, in proportion to their respective Common Interests, the Common Charges to pay the costs and expenses of operating, repairing and maintaining the Common Elements of that Building.

The tax status of the Condominium Board of a Condominium (an "Association") is uncertain and turns upon whether the Association is treated as a mere conduit for Unit Owners or as an association taxable as a corporation.

If the Association is deemed to be the conduit for the Unit Owners, all income of the Condominium, such as investment income earned on interim investments or rent on any Unit it acquires, less the applicable expenses of earning such income, will be deemed income to the Unit

Owners and taxable to them. However, Common Charges will not be considered income to the Association.

The Internal Revenue Service, however, may take the position that the Unit Owners, acting through the Condominium Board, constitute an association taxable as a corporation and that some or all of its income (including the Common Charges, and income described above, less expenses related to such income) which is deemed to constitute gross income is subject to Federal corporate income tax, New York State Corporation Franchise Tax, and New York City Corporate Franchise or Unincorporated Business Tax. Alternatively, it is possible that some or all of such income might be reportable directly by the Unit Owners.

In an effort to resolve the above uncertainty, Section 528 was added to the Code, pursuant to which the Condominium Board may, if qualified, elect to exclude from income the Common Charges payable by Unit Owners. (New York State and New York City have not adopted a similar statute.) In order for the Association to qualify as an exempt organization for federal income tax purposes under Code Section 528, it must meet the following six conditions:

(1) The Association must be organized and operated to provide for the acquisition, construction, management, maintenance, and care of the Association's property;

(2) 60% or more of the gross income for the taxable year is received as fees or assessments from owners of Units ("Exempt Function Income");

(3) 90% or more of the expenditures for the taxable year are for management, acquisition, maintenance and care of the Common Elements;

(4) 85% or more of the total square footage of the Condominium must be used for residential purposes, including areas with auxiliary purposes within the Condominium such as laundry areas, recreational rooms, swimming pools, storage rooms, and areas used by maintenance personnel;

(5) No part of the net earnings may inure to the benefit of any private individual except through the rebate of excess assessments or indirectly through the acquisition, management and maintenance of association property;

(6) The Association must properly elect to have Code Section 528 apply for the taxable year.

An Association meeting the requirements of Section 528 of the Code and electing to be exempt from federal income tax on Exempt Function Income would be taxable at a flat corporate rate, with some minor modifications, on the amount by which its non-exempt function income exceeds the amount of allowable deductions which are directly connected with the production of such income.

The Association will meet the requirements for election of Section 528 during its first year of operation pursuant to the requirements as set forth herein above. Thus, the Association may make such election during the first year if it is advantageous. However, since the requirements for election under Section 528 are applied annually it cannot now be determined whether the Association may elect Section 528 treatment in any subsequent tax year.

METROPOLITAN
Realty Exemptions

Office: 381 South 5th Street, Brooklyn, NY 11211
Mailing: 118 Middleton Street, Brooklyn, NY 11206
Phone: (718) 387-3004 | Fax: (718) 228-3503
Email: martin@mretax.com | Web: www.mretax.com

August 9, 2019

1296 Park Place PH LLC
1820 Avenue M 2394
Brooklyn, NY 11230

RE: 1296 Park Place
Brooklyn, NY
Block & Lot: 1371 - 31

Opinion Letter Regarding 421-a Real Estate Tax Exemption Benefits and Tax Liabilities

Dear Sir:

You have requested us to advise you with an opinion regarding the eligibility and extent of real estate tax exemption benefits, available to the above captioned premises (the "Site"), pursuant to Section 11-245 of the Administrative Code of the City of New York and §421-a of the New York State Real Property Tax Law (a/k/a "421-a Program").

The real estate tax benefits available to eligible properties under Section 421-a are as follows:

- During the period of construction, which will not exceed three years, multiple dwellings, which have met all requirements of Section 421-a and the regulations and have received a Preliminary Certificate of Eligibility, shall be exempt from real property taxes, other than assessments for local improvements, upon any increase in assessed valuation attributable to construction over the prior assessed valuation (the assessed valuation in effect during the tax year preceding the commencement of construction), provided that taxes shall be paid in each tax year in which full or partial exemption is in effect.

- Pursuant to Section 421-a and the regulations, in the event the multiple dwelling contains Floor Area of Commercial, Community Facility and/or Accessory Use Space which exceeds twelve percent (12%) of the Aggregate Floor Area, there shall be a diminution of the tax exemption in an amount equal to the ratio of Floor Area of Commercial, Community Facility and/or Accessory Use Space in excess of twelve (12%) of the Aggregate Floor Area to the Aggregate Area.

- After the first taxable status date immediately following the completion of construction, any increase in assessed valuation over the prior assessed valuation of eligible multiple dwellings which have received a Final Certificate of Eligibility shall be exempt from real property taxes, other than assessments for local improvements, for either ten, fifteen, twenty or twenty-five consecutive tax years. In addition, full taxes must be paid on the prior assessed valuation.

Please be advised that the City Agencies have amended the 421a Rules & Regulations to expand the 421-a geographic exclusion area (GEA). Developments in the GEA are required to provide 20% onsite affordable housing or Negotiable Certificates in exchange for receiving 421-a tax benefits. According to the amended Rules & Regulations, the subject premise is **not** located within the Geographic Exclusion Area (GEA).

In this instant, after the completion of construction as described above, any increase in the properties assessed valuation, resulting from the construction of the building will be exempt from taxation for a period of fifteen years, with 100% exemption for eleven years followed by a 20% phase-out in each of the succeeding four years. The current assessed value is not to be exempt from real estate taxes.

Furthermore, please be advised that the assessed valuations of the various units are determined by the Real Property Assessment Department of the New York City Department of Finance. The tax rate is determined by the New York City Council who publishes the rate annually, usually in June.

Abated Assessed Value Cap
Additionally, as per the amended Rules & Regulations, only a portion of an apartment's billable exempt Assessed Value is now eligible for the 421-a tax exemption. The value of a unit above this threshold ("AV cap") is ineligible to receive benefits. For units with an exempt Assessed Value above this Assessed Value cap, owners will pay taxes on the portion of Assessed Value above the cap, but still receive tax benefits on the portion of Assessed Value below the cap. The Assessed Value cap was originally set at $65,000 per unit, however, the amount has been increased by 3%, compounded annually, on each taxable status date following August 17, 2008, the first anniversary of the effective date of the State Law. As of tax year 2019/2020 the Assessed Value cap rate is $89,975.

To illustrate the afore-mentioned, see the following example. In the event of a unit with an Assessed Value of $95,000, the 421a benefits will abate the initial $89,975 in Assessed Value and the remaining will $5,025 will be billed as regular unabated tax liabilities.

It is our opinion, following the review of the approved plans, that the afore-mentioned cap in Assessed Value will not affect the subject premise since units in such size do not encompass an Assessed Value greater than $89,975.

In rendering this opinion, we have relied upon the following facts that were confirmed to us:

1. Based upon information received from you and your architect, one multiple dwelling building will be constructed, with a total of eight (8) residential condominium units;

2. According to the information provided to our firm, the approximate gross square footage of the building will be 7,457 SF;

3. The building will be constructed substantially in accordance with the plans and specifications approved by the New York City Department of Buildings, and comply with the requirements of section 421-a, the Regulations, and HPD is notified of any modifications to plans;

4. The temporary and final Certificates of Occupancy will be filed with the New York City Department of Housing Preservation and Development ("HPD"), along with the 421-a Applications, in the time periods listed below, and the Preliminary and Final Certificates of Eligibility will be filed with the New York City Department of Finance after receipt of the original certificates from HPD;

5. An application for Preliminary Certificate of Eligibility for 421-a benefits will be filed after the commencement of construction but prior to the issuance of either a Temporary Certificate of Occupancy for all residential areas or a Permanent Certificate of Occupancy upon prescribed forms and applications prepared by HPD;

6. An application for Final Certification of Eligibility for 421-a benefits will be filed prior to the occupancy of the building, but no earlier than the date of the application for a Preliminary Certificate of Eligibility. Additionally, the application must be completed within ninety (90) days following the issuance of the Permanent Certificate of Occupancy or the Temporary Certificate of Occupancy covering all residential space;

7. The premises, or any portion thereof, was "underutilized" (pursuant to the provisions of Section 421-a) 36 months prior to the commencement of construction;

8. Neither the Building nor any part thereof shall be used as a hotel or for single room occupancy as defined in the Rules Section 6-01(c);

9. The building will be substantially used for dwelling purposes for a period of at least fifteen years following its completion;

10. There will be no real estate taxes, water or sewer charges or payments in lieu of taxes due and owing as of the last day of the tax quarter preceding the submission date of the application to the Department of Finance, or at any time during the application process or the benefit period;

11. All records requested by the New York City Department of Housing Preservation and Development, pursuant to the regulations, will be provided.

12. Projects which commenced construction between June 15, 2015, and December 31, 2015 (with the issuance of New Building or Foundation Permits), are eligible to benefit from the old 421a Tax Abatement Program, only if construction will be completed no later than December 31, 2019, with the issuance of a Certificate of Occupancy. Failure to complete the project within the allotted time frame will cause the project to be ineligible for the Final 421-a Tax Abatement benefits.

Based upon the foregoing information furnished to us by you and your architect, and subject to your timely completion of work and filing of all documentation pursuant to Section 421-a of the Real Property Tax Law and applicable rules and regulations as is required to obtain the benefits thereof, and assuming presently applicable Section 421-a provisions apply, it is our opinion that:

- The premise will be eligible for partial real estate tax exemption under Section 421a, during the period of construction and after completion of construction; if construction will be completed by December 31, 2019, with the issuance of a Certificate of Occupancy, as outlined above.

- All Section 421-a partial real estate tax benefits may be revoked or reduced if the application misstates or omits to state a material fact and/or for non-payment or underpayment of taxes and for certain other reasons.

2020/21 Projected Assessed Value and Tax Liability
We have taken the following factors in account when formulating our opinion: (a) the recent tax assessment history on the property; (b) comparable condominium projects in the neighborhood which have been newly constructed; (c) market conditions in the general area; (e) proposed estimate of the cost of construction; (f) calculation of the gross floor area mentioned above.

Considering the afore-mentioned factors, we are estimating that following completion of construction the DOF will set the assessed value at approximately $75 per square foot. Accordingly, the total assessed value of the property is estimated to be $559,275, following completion of construction.

The residential units will be categorized as a tax class 2C. Based on the latest 2018/2019 tax rate of 12.612% (i.e., $12.612 per $100 of Assessed Value), the projected tax liabilities will be as follows:

Unit	% of Interest	Assessed Value	Annual Tax	421a AV with Cap	421a Annual Tax
1F	12.22%	$68,343	$8,619	$2,650	$334
1R	17.06%	$95,412	$12,033	$5,437	$686
2F	11.40%	$63,757	$8,041	$2,472	$312
2R	11.65%	$65,156	$8,217	$2,526	$319
3F	11.99%	$67,057	$8,457	$2,600	$328
3R	9.40%	$52,572	$6,630	$2,038	$257
4F	17.11%	$95,692	$12,069	$5,717	$721
4R	9.17%	$51,286	$6,468	$1,989	$251
Totals:	**100%**	**$559,275**	**$70,536**	**$25,430**	**$3,207**

Disclaimer
Although the aforesaid estimate of the Actual Assessed Valuation is a good-faith estimate, it is not possible to estimate same with any degree of certainty. Assessed valuations, when actually made, may be lesser or greater based on the interpretation of the administrative code and the applicable rules and regulations of the City of New York.

Though we believe our opinions are well-founded, they are not intended, and should not be construed as warranties or guaranties or representations as to future assessed valuations of the property under discussion and we accept no responsibility or liability in the event that the figures or projections set forth herein are incorrect or inaccurate. In no event will this firm, the Sponsor, the Sponsor's counsel or any other person be liable if the assessed valuation, when actually made, is lesser or greater that that estimated above, or if the administrative code and the applicable rules and regulations of the City of New York are changed in the future, or if the facts as represented prove to be untrue.

METROPOLITAN Realty Exemptions, Inc.

Sincerely yours,

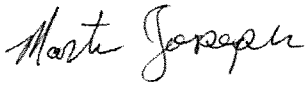

Martin Joseph
Metropolitan Realty Exemptions, Inc.

The Law Office of Jay Lichtman P.C.
68 Jay Street, Suite 420
Brooklyn, New York 11201

W. COUNSEL'S INCOME TAX OPINION

December 26, 2019

The 1296 Park Place Condominium
1296 Park Place, Brooklyn, New York

Re: Offering Plan ("Plan") for the Condominium Ownership of the Premises known as 1296 Park Place, Brooklyn, NY (the "Property")

Gentlemen:

You have requested our opinion with regard to certain Federal, New York State and New York City income tax matters relating to a person ("Unit Owner") who purchases a condominium Unit ("Unit") under the Plan.

In connection with this opinion, we have reviewed the Plan including the exhibits thereto and such other documents as we considered necessary for the purposes of this opinion.

The opinion expressed herein is based upon the assumptions that the Plan becomes effective and is consummated in accordance with its terms and condominium ownership of the Property is validly established. All terms not otherwise defined herein shall have the same meanings ascribed to them in the Plan.

I. Tax Deductions for Unit Owners

Under the Plan:

(1) a Unit Owner will receive legal title in fee simple to the Unit coupled with ownership of an individual interest in the land and appurtenances and all other parts of the Building held in common with other Units Owners in its building (the "Common Elements");

(2) each Unit will be a separate tax lot for the purposes of The New York City real estate tax, and the Unit Owner will be directly liable to The City for the real estate tax assessment with respect to his Unit, but not with respect to any other Unit;

(3) subject to certain restrictions as to form, a Unit Owner may mortgage his Unit as he wishes, and will be individually liable for payment of principal and interest (and/or finance charges) on such mortgage but the Unit will not be subject to the lien of any mortgage placed on other Units;

(4) and a Unit Owner may separately transfer his Unit subject, with certain exceptions, to certain rights of the Condominium Board of his building.

Phone: (347) 504-1724 EFax: (917) 688-2553 E-mail: Jay@Jaylichtmanlaw.com

On January 1, 2018, the Tax Cuts and Jobs Act of 2017 went into effect. This federal law significantly changed the previously existing Internal Revenue Code, including the taxes and deductions related to homeownership. Accordingly, it is our opinion that a Unit Owner who itemizes deductions will be entitled to deduct, for federal income tax purposes, real estate taxes in the amount of up to $10,000.00 a year assessed against his Unit. Purchasers should note, that the $10,000.00 tax deduction is for the combined New York State income taxes, New York City (or local) income taxes and real estate taxes. Accordingly, in the event the Unit Owner's combined New York State income taxes, New York City (or local) income taxes and real estate taxes exceed the $10,000.00 threshold, a Unit Owner may not be able to realize a deduction for amounts over the $10,000.00 threshold. In addition, a Unit Owner who itemizes deductions will be entitled to deduct, for federal income tax purposes, interest on any acquisition indebtedness[1] up to $750,000.00.[2] See Sections 163 (interest) and 164 (taxes) of the Internal Revenue Code of 1986, as amended (the "Code").[3] These expenses will be deductible when paid or accrued in accordance with the Unit Owner's method of accounting.

In addition to the interest and real estate tax deductions discussed above, a Unit Owner who uses all or part of his Unit in the conduct of his trade or business, or for the production of income, may deduct a portion of common charges allocable to such use. Each such Unit Owner who uses all or part of his Unit in the conduct of his trade or business will be entitled to deduct cost recovery on his Unit (similar to depreciation), computed separately and based upon the cost of his Unit (see Code Section 1012). Such deduction may be determined under Code Section 168 by using the straight-line method or under ACRS tables which approximate the use of 175% declining balance method, switching to straight-line recovery in later years. The excess of accelerated cost recover deductions over deductions computed using the straight-line method is an item of tax preference and may result in Unit Owners incurring alternative minimum tax. The amount of permitted deductions has been modified by the Internal Revenue Code 1986. The deduction of Common Charges for a Unit Owner who uses all or part of his Unit in the conduct of his trade or business is limited to that portion which does not exceed the Unit Owners' share of expenses paid or incurred through the Condominium and which would constitute trade or business expenses under Code Section 162 or would constitute expenses for the production of income under

---

[1] Per the Internal Revenue Code of 1986 section 163 (h) B (i), as amended, "acquisition indebtedness" means any indebtedness which: (I) is incurred in acquiring, constructing, or substantially improving any qualified residence of the taxpayer; and (II) is secured by such residence. Such term also includes any indebtedness secured by such residence resulting from the refinancing of indebtedness meeting the requirements.

[2] However, the Internal Revenue Code of 1986, as amended, provides that if the Unit Owner has more than two (2) residences, he will not be able to deduct his interest on more than two (2) of his residences. See section "Real Estate Taxes."

[3] The New York State and City tax laws incorporate by reference Federal itemized deductions in regard to resident individuals (see N.Y. Tax Law Section 615; N.Y.C. Admin. Code Section 11-1715) and for corporations (see N.Y. Tax Law Section 208.9; N.Y.C. Admin. Code Section 11-600). Hence, all Federal authorities hereinafter referred to should, for the most part, apply under the New York State and/or City income tax statutes and to the extent that deductions are permitted for Federal tax purposes, they will be permitted for New York State and New York City tax purposes. As of the date hereof, it is unclear at this time if the State and City income tax deductions for real estate taxes are now also capped at the $10,000.00 threshold. It should be noted, however, that for Federal income tax purposes, the interest and real estate tax deductions discussed herein may be reduced for a taxpayer who has certain specified items of tax preference for Federal income tax purposes (including but not limited to holders subject to the alternative minimum tax, insurance companies, pensions, trusts partnerships and U.S. expatriates). Accordingly, a Unit Owner who is liable for an alternative minimum tax will not receive the full benefits of certain tax deductions (including interest on mortgages) (see Section 55 of the Internal Revenue Code).

Code Section 212, if they were paid directly by the Unit Owner. Common Charges may exceed the deductible amount to the extent that Common Charges are used by the Condominium Board to finance capital expenditures or reserves. The amount used to fund capital expenditures or reserves are not deductible and must be capitalized by Unit Owners, increasing the basis in the Unit and thus the cost recovery deduction available for that Unit.

II. Tax Treatment of Condominium and Condominium Board

Under the Plan, each Condominium, via the Condominium Board, will determine, assess to, and collect from, its Unit Owners, in proportion to their respective Common Interests, the Common Charges to pay the costs and expenses of operating, repairing and maintaining the Common Elements of that Building.

The tax status of the Condominium Board of a Condominium (an "Association") is uncertain and turns upon whether the Association is treated as a mere conduit for Unit Owners or as an association taxable as a corporation.

If the Association is deemed to be the conduit for the Unit Owners, all income of the Condominium, such as investment income earned on interim investments or rent on any Unit it acquires, less the applicable expenses of earning such income, will be deemed income to the Unit Owners and taxable to them. However, Common Charges will not be considered income to the Association.

The Internal Revenue Service, however, may take the position that the Unit Owners, acting through the Condominium Board, constitute an association taxable as a corporation and that some or all of its income (including the Common Charges, and income described above, less expenses related to such income) which is deemed to constitute gross income is subject to Federal corporate income tax, New York State Corporation Franchise Tax, and New York City Corporate Franchise or Unincorporated Business Tax. Alternatively, it is possible that some or all of such income might be reportable directly by the Unit Owners.

In an effort to resolve the above uncertainty, Section 528 was added to the Code, pursuant to which the Condominium Board may, if qualified, elect to exclude from income the Common Charges payable by Unit Owners. (New York State and New York City have not adopted a similar statute.) In order for the Association to qualify as an exempt organization for federal income tax purposes under Code Section 528, it must meet the following six conditions:

(1) The Association must be organized and operated to provide for the acquisition, construction, management, maintenance, and care of the Association's property;

(2) 60% or more of the gross income for the taxable year is received as fees or assessments from owners of Units ("Exempt Function Income");

(3) 90% or more of the expenditures for the taxable year are for management, acquisition, maintenance and care of the Common Elements;

(4) 85% or more of the total square footage of the Condominium must be used for residential purposes, including areas with auxiliary purposes within the Condominium such as laundry

areas, recreational rooms, swimming pools, storage rooms, and areas used by maintenance personnel;

(5) No part of the net earnings may inure to the benefit of any private individual except through the rebate of excess assessments or indirectly through the acquisition, management and maintenance of association property;

(6) The Association must properly elect to have Code Section 528 apply for the taxable year.

An Association meeting the requirements of Section 528 of the Code and electing to be exempt from federal income tax on Exempt Function Income would be taxable at a flat corporate rate, with some minor modifications, on the amount by which its non-exempt function income exceeds the amount of allowable deductions which are directly connected with the production of such income.[4]

It is our opinion that the Association will meet the requirements for election of Section 528 during its first year of operation pursuant to the requirements as set forth herein above. Thus, the Association may make such election during the first year if it is advantageous. However, since the requirements for election under Section 528 are applied annually it cannot now be determined whether the Association may elect Section 528 treatment in any subsequent tax year.

We express no views as to any Federal, New York State and/or New York City tax consequences or as to any aspects of the Plan other than those explicitly discussed in this opinion. Nor do we express any view as to the tax status and tax consequences of the Plan under the laws of any other U.S. or foreign jurisdictions. This opinion does not deal with tax consequences which may result to a foreign Unit Owner by reason of his foreign status. This opinion also does not deal with the tax consequences which may arise if Units are acquired and/or leased by the Condominium Board or with respect to whether a Unit Owner may be deemed a resident of New York City due to ownership of a Unit. We therefore strongly advise each person contemplating the purchase of a Unit to consult his own tax advisor as to all such tax matters (including the tax matters discussed in this opinion).

We make no warranty that the Internal Revenue Service, the New York State Department of Taxation and Finance or the Finance Administration of The City of New York will accept any or all of the views stated above. Moreover, the Federal, State and City tax laws and regulations (and the rulings and decisions thereunder) may change and thereby affect, in whole or in part, the views stated above.

THIS OPINION IS NOT A GUARANTEE IT IS BASED UPON EXISTING RULES OF LAW APPLIED TO THE FACTS AND DOCUMENTS REFERRED TO ABOVE. NO

[4] If in the future an Association does meet the substantially all test and elects tax treatment under Code Sec. 528, all amounts received by the Association as exempt function income will be exempt from federal income tax. This consists of amounts received as membership dues, fees, or assessments from owners of Residential Units. However, the Association would be subject to tax on income which is not exempt function income to the extent such income exceeds expenses properly allocable to such income. Examples of income which is not exempt function income are interest earned on reserve funds, amounts received from persons who are not members of the Association amounts received for work done on privately owned property which is not Association property, and amounts received from members for special use of the Association's facilities, the use of which is not available to all members as a result of having paid the dues, fees, or assessments required to be paid by all members.

ASSURANCES CAN BE GIVEN THAT THE TAX LAWS UPON WHICH COUNSEL BASE THIS OPINION WILL NOT CHANGE. IN NO EVENT WILL THE SPONSOR, THE SPONSOR'S COUNSEL, THE CONDOMINIUM BOARD, COUNSEL TO THE CONDOMINIUM BOARD, THE SELLING AGENT OR ANY OTHER PERSON BE LIABLE IF THERE ARE CHANGES IN THE FACTS ON WHICH COUNSEL RELIED IN ISSUING THIS OPINION, OR IF THERE ARE CHANGES IN THE APPLICABLE STATUTES, REGULATIONS, DECISIONAL LAW OR INTERNAL REVENUE SERVICE RULINGS ON WHICH COUNSEL RELIED WHICH CAUSE THE CONDOMINIUM TO CEASE TO MEET THE REQUIREMENTS OF THE INTERNAL REVENUE CODE OF 1986, AS AMENDED, OR THE NEW YORK STATE TAX LAW, AS AMENDED. ALL UNIT OWNERS, POTENTIAL UNIT OWNERS AND THE CONDOMINIUM ARE HEREBY INFORMED THAT (I) ANY TAX ADVICE CONTAINED IN THIS OPINION IS NOT INTENDED OR WRITTEN TO BE USED, AND CANNOT BE USED, FOR THE PURPOSE OF AVOIDING TAXES AND PENALTIES UNDER THE INTERNAL REVENUE CODE, (II) THE ADVICE IS WRITTEN TO SUPPORT THE PROMOTION OR MARKETING OF THE TRANSACTIONS OR MATTERS ADDRESSED IN THE PLAN, AND (III) EACH UNIT OWNER, EACH POTENTIAL UNIT OWNER, AND THE CONDOMINIUM SHOULD SEEK ADVICE BASED ON ITS PARTICULAR CIRCUMSTANCES FROM AN INDEPENDENT TAX ADVISOR.

IN OUR OPINION, BASED ON THE INFORMATION PROVIDED ABOVE IN THE SPONSOR'S TAX EXPERT'S OPINION LETTER, THE CONDOMINIUM WILL BE ELIGIBLE FOR 421-a BENEFITS.

We consent to the incorporation of this opinion in the Plan.

Very truly yours,

The Law Office of Jay Lichtman P.C.

By: _____
Jay Lichtman, Esq.

Phone: (347) 504-1724 EFax: (917) 688-2553 E-mail: Jay@Jaylichtmanlaw.com

The Law Office of Jay Lichtman P.C.
68 Jay Street, Suite 420
Brooklyn, New York 11201

December 26, 2019

Re: 1296 Park Place, Brooklyn New York
Condominium Offering Plan
Compliance with Real Property Law § 339-i

To Whom It May Concern;

Pursuant to your request, I have received the allocation of Percent Common Interests (PCI) as set forth on the Schedule A to the offering Plan.

Based solely on my review of the Schedule A of the Offering Plan, the New York State Condominium Act and the Rules and Regulations, as well as the validity and correctness, without further independent investigation, of an opinion letter set forth in the Offering Plan as required by NYCRR section 20.3(i), from King David International Realty, 616 Williamsburg Station, Brooklyn, NY 11211, I have determined that the method selected for calculating the percentage of common interests in the condominium is in accordance with the Real Property Law section 339-i(1) is subparagraph (iv), which provides:

> "(iv) the Common Interests of each of the Units have been allocated based upon floor space, subject to the location of such space and the additional factors of relative value to other space in the condominium, the uniqueness of the Unit, the availability of common elements for exclusive or shared use, and the overall dimensions of the particular Unit."

Very truly yours,

The Law Office of Jay Lichtman P.C.

By: _____
Jay Lichtman

Phone: (347) 504-1724 EFax: (917) 688-2553 E-mail: Jay@Jaylichtmanlaw.com

X. RESERVE FUND

A reserve fund will be established in the budget. The basis of the figure projected for this item is approximately ten percent (10%) of the entire budget. This fund shall be used as a reserve to pay for periodic capital replacements or repairs. At this time the Sponsor has no knowledge of any capital improvements that may have to be made during the first five years of condominium operation. Funds will be available to the Condominium Board within seven (7) days after the first closing.

In the event there is a need for major capital expenditures in excess of the funds available from the contingency and or reserve fund the Condominium Board will assess a charge to each Unit Owner in accordance with its percentage of common interest.

While the Sponsor is in control of the Condominium Board, the reserve fund may not be used to reduce common charges.

Neither the department of law nor any government agency passed upon the adequacy of the Reserve Fund.

Y. WORKING CAPITAL FUND

The Sponsor, as agent of the Condominium Board, will collect from each original purchaser at the time of the Closing an "Initial Capital Payment" equal to two (2) months' estimated common charges for each Unit. The Sponsor will deliver the funds so collected to the Condominium Board to provide the necessary working capital for the Condominium. Such funds may be used for certain prepaid items, organizational costs, and for such other purposes as the Condominium Board may determine and may be replenished as the Board sees fit. There are no anticipated net closing adjustments to the Working Capital Fund in favor of Sponsor. While the Sponsor is in control of the Condominium Board, the Working Capital Fund shall not be used to reduce estimated Common Charges. NO REPRESENTATION IS MADE THAT THE INITIAL WORKING CAPITAL FUND WILL BE ADEQUATE TO COVER CURRENT OR FUTURE EXPENSES, INCLUDING REPAIRS OR REPLACEMENTS, AND IF ADDITIONAL FUNDS ARE REQUIRED OVER AND ABOVE THE INITIAL CAPITAL FUND, IT MAY BE NECESSARY FOR THE CONDOMINIUM BOARD TO INCREASE THE CHARGES.

NEITHER THE DEPARTMENT OF LAW NOR ANY OTHER GOVERNMENT AGENCY HAS PASSED UPON THE ADEQUACY OF THE INITIAL WORKING CAPITAL FUND OR THE PHYSICAL CONDITION OF THE BUILDING.

Z. MANAGEMENT AGREEMENT

1. On or about the closing of title to the first Unit, the Condominium Board shall enter into an agreement to manage the property with Tri-State Property Management, for the first year of condominium operation, for a fee of $24,600.00, which shall include the cost of the part-time superintendent a janitorial service approved by the Department of Buildings available 24 hours per day. Tri-State Property Management Group is affiliated with the Sponsor. The term of the agreement is for one year. Unit owners are not responsible to clean the common areas while there is a managing agent. After the first year, the fee charged may be higher and the Unit owners may choose to manage the condominium themselves or enter into a contract with an independent managing agent. In the event that an outside managing agent is retained, the common charges will need to be increased. The prevailing rate for management for a comparable condominium is $200.00 to $250.00 per Unit per month with the included janitorial service fee. The Managing Agent will work in the best interest of the condominium and its Unit owners. The Sponsor and/or its Principals will not engage in sweetheart deals.

2. The managing agent's main duties, among others, will be:

   (a) Bill and collect common charges and other charges and, if authorized by the Condominium Board, institute summary proceedings to recover possession of Units against Unit owners in default of common charges and other charges.

   (b) Cause the building to be maintained, repaired and altered in the condition deemed advisable by the Condominium Board.

   (c) Contract for necessary services for the building, such as electricity, gas, window cleaning, exterminator service, elevator maintenance and cleaning service.

   (d) Purchase all supplies necessary to properly maintain and operate the building.

   (e) Check all bills received in connection with the operation of the building and cause to be paid all such bills and other expenses such as water charges etc.

   (f) Supervise, pay, hire and discharge employees.

   (g) Enter into contract with elevator Company to perform monthly maintenance service I tests as required by law.

   (h) Obtain and maintain (to the extent obtainable) fire, liability and other insurance, and in such amounts, as may be required.

   (i) Maintain an accurate set of books and orderly files of common charge records, insurance policies, receipted bills, etc.

   (j) Meet with Board of Directors to discuss financial and operating issues.

3. All expenses incurred by the Managing Agent in performance of its duties shall be paid by the Condominium, which will also indemnify the Managing Agent against any liability for acts

properly performed by it pursuant to the agreement of the Condominium's instructions or for injury to the person or property not resulting from the Managing Agent's gross negligence or willful failure to comply with its obligations under the Management Agreement.

4. The management agreement is assignable.

5. Either party has the right to cancel the agreement without cause upon providing 60 days written notice to the managing agent.

6. The management agreement shall be deemed to be automatically renewed for an additional period of one year unless either party, within 60 days prior to the expiration of the agreement, delivers written notice of non-renewal.

There are currently no agreements binding on the condominium. The plan will be amended to disclose any agreements signed by the management agent on behalf of the condominium.

AA. IDENTITY OF PARTIES

Sponsor and Selling Agent

The Sponsor of this project is 1296 Park Place PH LLC, a New York Limited Liability Company with an address at 1820 Avenue M # 2394, Brooklyn, New York 11230. The Principals of the Sponsor are Reuven Rothstein and Zaur Laven. Mr. Rothstein and Mr. Laven each have experience as builders and owners of real estate. Zaur Laven did had a prior bankruptcy in 2010 which has subsequently been satisfied and discharged. Neither the Sponsor nor its principal has any felony or non-felony convictions, injunctions, bankruptcies or judgments which are material to the Offering Plan or an offering of securities generally. No individuals who own or control a 10 percent or more equity interest in the Sponsor have been subjected to any prior bankruptcies, felony convictions, convictions, injunctions or judgments. The Sponsor has not previously been the Sponsor of any of any Offering Plans in the state of New York within the previous (5) years. The Principals of the Sponsor has been the principal of the Sponsor for the following offering plans in the past five (5) years, however the Principal no longer owns a 10% interest in the following offering plan:

PRINCIPAL	PLAN	ADDRESS	FILE NUMBER	ACCEPTED
Reuven Rothstein Zaur Laven	The 521 Greene Avenue Condominium	521 Greene Avenue Brooklyn, NY 11221	CD17-0007	7/18/2017

The Principals of the Sponsor have not been the Principals of any offering plans in the state of New York in the past five (5) years, nor own an interest of 10% or greater in any other condominiums or cooperatives other than the following offering plans:

PRINCIPAL	PLAN	ADDRESS	FILE NUMBER	ACCEPTED
Reuven Rothstein Zaur Laven	The 23 North Elliot Place Condominium	23 North Elliott Place, Brooklyn, NY 11205	CD17-0190	10/20/2017
Reuven Rothstein Zaur Laven	The 1702 Newkirk Avenue Condominium	1702 Newkirk Avenue, Brooklyn, NY 11226	CD19-0015	10/2/2019

An Offering Plan for the above properties submitted are on file with the Department of Law and are either available for public inspection or will be available upon acceptance for filing. The Principals of Sponsor are current in their obligations to the same and do not own an interest of 10% or greater in any other condominiums or cooperatives.

Sponsor will not be using a Selling Agent for this project. Sponsor will act as selling agent for the condominium. The Principal of the Sponsor has prior experience as a selling agent for his prior condominium offerings.

Attorneys

The Sponsor is represented by The Law Office of Jay Lichtman P.C., 68 Jay Street, Suite 420, Brooklyn, New York 11201 in connection with this Offering Plan and recording of the Declaration of Condominium and the sales and closing of the Units as Escrow Agent. Neither the Sponsor nor its principal thereof has a beneficial interest in The Law Office of Jay Lichtman, P.C.

The Condominium does not have independent legal counsel. IT IS SUGGESTED AND EXPECTED THAT EACH PURCHASER WILL CONSULT WITH AND BE REPRESENTED BY HIS/HER OWN COUNSEL IN CONNECTION WITH THIS OFFERING.

Managing Agent

The Building will be managed Tri-State Management. The managing agent has had previous experience in the management of condominiums. Tri-State Management is currently managing 1010 New York Avenue as well as 2111 Union Street in Brooklyn. There are no prior felony convictions of the managing agent or any principals of the managing agent; nor are there any prior convictions, injunctions and judgments against the managing agent or any principal of the managing agent that may be material to the offering plan or an offering of securities generally, that occurred within 15 years prior to the submission of the proposed offering plan.

Engineer/Architect

Ronald B. Cagan, P.E. with an address at 1701 Elm Avenue, Brooklyn, NY 11230, a Professional Engineer, has rendered the Floor Plans of the Property and has rendered the report thereof as set forth in Part II. The architect has been involved in the planning and development of condominiums and the drafting of architectural drawings and reports for such condominiums in New York City and particularly in the Borough of Brooklyn, for over five (5) years. The architect has no financial interest in the Property, the Sponsor, the Condominium or any other party interested in this transaction, except for its fee for services rendered in connection with such report. Neither the Sponsor nor its principal thereof has a beneficial interest in Ronald B. Cagan, P.E. Mr. Cagan previously worked on the following projects:

1. 556 Bainbridge street, Brooklyn, NY
2. 443 Pulaski Street, Brooklyn, NY
3. 210 President Street, Brooklyn, NY

Sponsor's Preferred Mortgagee

The Sponsor's Preferred Mortgagee is Shimon Rosenberg, Private Mortgage Banker, New Construction Specialist, Wells Fargo Home Mortgage | 150 E 42nd St New York, NY 10017, Tel 212-214-6711 | Cell 718-564-9068 | Fax 866-943-1195, Email: Shimon.M.Rosenberg@wellsfargo.com. Neither the Sponsor nor the principals of the Sponsor have a beneficial interest with Sponsor's Preferred Mortgagee or its Principals thereof.

AB. REPORTS TO UNIT OWNERS

It is the obligation of the Condominium Board of the condominium to give all Units owners annually the following documentation:

(a) Within (4) four months after the end of each fiscal year of the Condominium, the Condominium Board shall submit to each Unit Owner, a financial statement of the condominium prepared by a certified public accountant or public accountant; such statement shall be certified while the Sponsor is in control of the Condominium Board.

(b) Ten (10) to thirty (30) days prior notice of the annual Unit owners' meeting.

(c) A copy of the proposed annual budget of the condominium by fifteen (15) days prior to the date set for adoption thereof by the Condominium Board; such budget shall be certified while the Sponsor is in control of the Condominium Board.

AB. DOCUMENTS ON FILE

Pursuant to the provisions of Section 352-e of the New York General Business Law, copies of the Plan and all exhibits and documents referred to herein shall be available for inspection by prospective purchasers and by any person who shall have purchased a Unit offered under the Plan or shall have participated in the offering of such Unit, at the office of The Law Office of Jay Lichtman, P.C. attorneys for the Sponsor, 68 Jay Street, Suite 420, Brooklyn, New York 11201, during convenient weekday hours and shall remain available for such inspection for a period of six (6) years from the First Closing. There will be a charge of forty cents ($0.40) per page for copying any documents. The Plan and all other exhibits and documents referred to herein shall also be available for inspection without charge and copying by appointment (at a current charge of $0.25 per page) at the Department of Law, 28 Liberty Street, 21st Floor, New York, New York 10005. In addition, a set of the floor plans showing the layout, locations, and approximate dimensions of each Unit and its Unit number designation and tax lot number, certified by the appropriate governmental authority of The City of New York as conforming to the official tax lot number for each such Unit, will be filed with the Register's Office when the Declaration is recorded, and an additional set will be furnished to the Condominium Board.

The Declaration and the By-Laws will be recorded in the Register's Office prior to or concurrently with the First Closing and a copy of same will be provided to the Condominium Board. All deeds conveying, and all mortgages covering, individual Units will also be recorded in such office.

AC. GENERAL

There are no lawsuits, administrative proceedings, or other proceedings the outcome of which may materially affect this offering, the purchasers of Units, the Property, Sponsor's capacity to perform all of their obligations under the Plan, the Condominium, or the operation thereof, except as may be further herein expressly set forth.

This property has not been the subject of any prior public offerings. No contracts or agreements have been entered into and no deposits or advances of funds accepted as of the date the plan is accepted for filing.

All of the Units in the building which is the subject of this offering plan are vacant of tenants as of the date of submission of the plan to the Department of Law.

In accordance with the provisions of the laws of the State and City of New York, neither Sponsor nor any selling agent engaged by Sponsor will discriminate against any person because of sex, race, creed, color, national origin, ancestry, or other ground prescribed by law in the sale of the Units offered by the Sponsor pursuant to the Plan or in the leasing of any such Units or any other portion of the Building.

Purchasers have a right to rescind purchase agreements following material adverse amendments. Affected Purchasers will be given, for not less than fifteen (15) days after the presentation of the amendment, the right to rescind by sending written notice to the Sponsor. Sponsor will return any deposit or down payment to purchasers who rescind within fifteen (15) days of the receipt of written notice of rescission. No deposit or down payment shall be returned to interim lessees prior to their vacating of the apartment. See Section "Interim Leases."

The Sponsor reserves the right to revise, from time to time, the terms and conditions upon which the Units are to be sold and to otherwise revise the Plan, including revisions affecting the rights, obligations, and liabilities of Sponsor, purchasers, or prospective purchasers, without obtaining the consent of purchasers or others. However, the Sponsor may neither unilaterally cancel an outstanding Purchase Agreement, except as therein provided (such as in the case of an uncured default), nor unilaterally change the purchase price or the payment terms contained in such a Purchase Agreement. All substantive or material revisions will be contained in a duly filed amendment to the Plan. In the case of a material revision adversely affecting the rights, obligations or liabilities of then existing purchasers or reducing the undertakings or obligations of Sponsor, such purchasers will be given the right to rescind their Purchase Agreements and be refunded all monies paid thereunder, with interest earned thereon, if any. Unless an affected purchaser consents, no material change will be made in Unit size, layout or percentage of common interest if a purchase agreement has been executed and delivered to the Sponsor for that Unit and the Purchaser is not in default. Unless all purchasers consent, no material change will be made in the size and no material adverse change will be made in the quality of common elements.

This Plan does not knowingly omit any material fact or knowingly contain any untrue statement of a material fact. This Plan does not contain a full summary of all the provisions of the various documents referred to herein. Statements made as to the provisions of such documents are qualified in all respects by the contents of such documents and, in the case of any such documents executed by or with the written consent of a purchaser pursuant to the Plan, any rider or separate

agreement changing or adding provisions to such document.

The Plan is offered only to persons eighteen (18) years of age or over and entities. Unless the context otherwise requires, words used in the singular in Part I of the Plan include the plural and vice versa, and a reference herein to any one gender, masculine, feminine, or neuter, includes the other two.

No person has been authorized to make any statement or representation or furnish any information not expressly contained herein. Any information, data, or representations not contained herein or in the documents and exhibits referred to herein must not be relied upon. This Plan may not be changed or modified orally.

AD. SPONSOR'S STATEMENT OF BUILDING'S CONDITION

The Sponsor adopts the "Description of Property and Building Condition" set forth in Part II of the Plan and represents that it has no knowledge of any material defects or need for major repairs to the property as set forth in the Description of Property and Building Condition.

The number and usage of the Units shall be identical to the number and usage of the Units as approved by the Building Department.

There will be no lead paint used in the construction of the Condominium in part or in whole. For further details see Part II Description of Property.

AE. ASBESTOS STATEMENT

Part II of the Plan includes an Asbestos Report that states that there is no Asbestos Containing Material (ACM) present in insulating or fireproofing material that is being affected by the work being done on the building, anywhere in the building.

Dated:

SPONSOR:
1296 Park Place PH LLC
1820 Avenue M # 2394
Brooklyn, New York 11230

PART II

DOCUMENT NUMBER 1

DESCRIPTION OF PROPERTY

RONALD B. CAGAN, P.E.
1701 ELM AVENUE
BROOKLYN, NEW YORK 11230
1516.249.3746

ENGINEER'S DESCRIPTION OF PROPERTY
Premises known as
1296 Park Place
Brooklyn, New York 11213

Date: December 23, 2019

(a) *Location and use of property*:
This property and proposed use will comply with all zoning and use requirements at closing.

(1) Address:
1296 Park Place Brooklyn, New York 11213.

(2) Block and lot number:
Tax Block: 1371
Lot: 31

(3) Zoning:
The site is located in a R6 Zone, which is a general residence district.

(4) Permissible use.
The New York City Zoning Resolution permits Use Group 2 Residential Use as a matter of right.

This Project is a Quality Housing Program and meets the following program criteria.
1. Each unit shall have a laundry room.
2. At least 20 square feet of glazed area shall be provided for daylight in corridors.

(b) Status of construction:

(1) Year built:
The building was originally built in year 1901. This is an existing 2 story building currently undergoing an alteration; there shall be a horizontal extension at the rear of the cellar, 1st and 2nd floor, and a vertical extension by means of adding a 3rd floor, 4th floor and mezzanine. The entire interior shall be new. Construction began approximately in December 2015. The anticipated completion date is in February of 2020.

(2) Class of construction:
This building will comply with 2014 NYC Construction Code for Construction Class I-B. Construction Class I-B includes two-hour fire-rated structures.

All exterior walls shall be 2 hour fire-rated.
All structural frame walls shall be 2 hour fire-rated.
The floors shall be 2 hour fire-rated.
The roof shall be 1 hour fire-rated.

All wall partitions separating units, mechanical rooms, public hallways and stairs are 2 hour fire-rated.
All loading bearing and non-loadbearing walls that are not separating units, mechanical rooms and/or public hallways are .5 hour fire-rated.

(3) Certificate of Occupancy, type and number:
The Sponsor shall obtain a temporary Certificate of Occupancy prior to the closing of the first unit.

(4) Alteration permit numbers and description of work done:
Construction is permitted under an Alteration Type 1, application number # 321279692 filed on 11/30/2015.

(c) *Site*:

(1) Size:
The lot has an approximate area of 2,992.6 square feet.

(2) Number of buildings and use:
There is one building on the site. There shall be a total of 8 dwelling units.

(3) Streets owned or maintained by the project:
There are no streets owned or maintained by the project. The streets are owned by the NYC.

(4) Drives, sidewalks and ramps:

(i) Paving:
The public driveways adjacent to the property are asphalt.

(ii) Curbing:
The public sidewalks are concrete.

(iii) Catch basins, drainage:
There are no catch basins inside the property.

(iv) Street lighting:
Street lighting is provided by the City of New York and is adequate for all safety public needs.

(v) The aforementioned items are in conformity with local fire district, town or municipal building codes.

(d) *Utilities*:

Water and Sewer
Water supply and combined sewer servicing the building will be provided by the City of New York and shall be paid by the condominium unit owners as part of the common charges. There will be one water meter for water and sewer serving the entire building.

Gas
None.

Electricity
Electricity will be provided by Consolidated Edison. There shall be individual meters for electric consumption serving each unit. Electricity utilized within the units shall be billed directly to the condominium unit owner. There shall be a separate meter for the electricity serving the common elements. The electricity utilized for the common elements shall be paid by the condominium unit owners as part of the common charges.

Telephone
Telephone service will be provided on an individual basis to each unit by local providers. Each condominium unit owner will be billed directly by provider.

Cable Service and TV
A cable service provider will provide TV and internet service to the building. Each condominium unit owner will be billed directly by provider.

(e) *Sub-soil conditions*:

(1) No uneven foundation movement or settling has occurred.
(2) There is no evidence of moisture or seepage or ground water infiltration.
(3) There is no danger from flooding either due the water table in the area or due to the overflow of other bodies of water. The project is not designated as a flood zone by any local, state or federal agency.

(f) Landscaping and enclosures:

(*1*) Grass cover:
There shall be grass cover at the front and rear yards.

(*2*) Plantings:
There shall be no plantings at the premises.

(*3*) Trees:
Sponsor shall pay for one street tree into the tree-fund to the NYC Department of Parks and Recreations and they will plant the tree.

(*4*) Fencing
The rear yard is enclosed with an existing restored 3'-6" high steel fence. There shall be a new 3'-6" high iron fence above the retaining wall enclosing the areaway at the rear yard. There shall be a new 3'-6" high iron fence above the retaining wall enclosing the stairs at the front yard.

(*5*) Gates:
There shall be no gates at the premises.

(*6*) Garden walls:
There shall be no garden walls at the premises.

(*7*) Retaining walls:
There shall be a new 8" thick concrete retaining wall at the rear yard enclosing the areaway at the cellar. There shall be a new 8" thick concrete retaining wall at the front yard enclosing the stairs leading to the cellar.

(*8*) Display pools and fountains:
There shall be no display pools and fountains at the premises.

(g) Building size:

(*1*) Total height:
The building has an approximate height of 53'-¼" measured from the adjoining grade to the top of the mezzanine floor.

(*2*) Crawl spaces:
There shall be no crawl space.

(*3*) Number of sub-cellars and cellars:
There is one cellar to the building.

(*4*) Number of floors:
The building shall be comprised of 4 stories plus a mezzanine and a cellar.

(*5*) Equipment rooms:
There shall be 1 utility room at the cellar housing the electric meters, water meter and pump.

(*6*) Parapet:
The parapet shall have a minimum height of 3'-6".

(h) *Structural system*:

(1) Exterior of buildings:
The existing foundation footings and foundation walls are concrete and shall remain. The condition is fair. The new foundation footings shall be 2' x 1' concrete with #5 bars. The new foundation walls shall be 12" thick concrete with #4 bars. Foundation wall and footings shall have a minimum PSI of 4,000. There shall be a plastic vapor barrier installed at the foundation walls and floor slab for proper waterproofing. There shall be 2' wide concrete underpinning at the foundation. No subgrade drainage system is provided for the foundation of the building.

(i) Walls:

- The existing front walls and party walls at the 1st and 2nd floors are brick and are in fair condition.
- The new front walls at the 3rd and 4th floors shall be brick, vapor barrier, 2" rigid insulation with an R-8 value, 8" CMU, and finished on the inside with 2½" steel studs @ 16 o.c., fiberglass batt insulation with an R-13 value and two layers of 5/8" gypsum wallboard.
- The new side walls at the 3rd and 4th floors, the new rear walls at all floors and the new mezzanine/stair bulkhead walls shall be Eifs, 2" rigid insulation with an R-8 value, ¾" plywood sheeting, 2" rigid insulation, 8" CMU with horizontal joint reinforcement @ 16 o.c., and finished on the inside with 2" metal studs @ 16 o.c., fiberglass insulation with an R-13 value and two layers of 5/8" gypsum board.
- Exterior walls are two hour fire-rated.
- The new exterior walls at the fourth and mezzanine floors shall be two hour fire-rated.

(ii) Floors:

- The cellar floor slab shall be 4" concrete slab with steel mesh over 4" granular fill.
- The floor/ceiling construction between the cellar and the 1st floor shall be ¾" concrete floor panels, 10" c-joists @ 12 o.c., batt insulation and 2 layers of 5/8" gypsum board as required by code.
- Typical floor/ceiling construction at all other floors shall be ¾" concrete floor panels, 10" c-joists @ 12 o.c., and 1 layer of 5/8" gypsum board.
- Said floor/ceiling constructions as described above shall be in compliance with BC 1207.3.

(iii) Windows:

There shall be new, double hung type windows by Lincoln. Frames shall be wood. Sills shall be limestone. Lintels shall be iron. Sash shall be aluminum. Glass shall be double glazed. Caulking shall be silicone. Screens shall be provided. Window guards shall not be provided. Windows shall have a U Value of 0.32. Windows shall have a 3 year manufacturer's warranty. No thermal break provided.

Light and air is provided in each unit in compliance with all applicable codes.
A minimum of 10% of a habitable room area is for light.
A minimum of 5% of a habitable room is for air.

There shall be no lot line windows.

(iv) Landmark status:

This building does not have Landmark status.

(2) Parapets and copings:

The front and rear of the mezzanine terraces shall be enclosed with parapet walls. The roof shall be enclosed by parapet walls. Parapets shall be 3'-6" CMU finished with Eifs. Coping and flashing shall be aluminum.

(3) Chimneys and caps:

There shall be no chimney. There shall be no boilers, hot water heater compactors, gas combustion, trash compactors or fireplaces on premises.

(4) Balconies:

See (h)(7) for terraces.

(i) Balconies finish:

Doors leading to the balconies shall be sliding type, glass doors with aluminum frames as manufactured by Lincoln.

(ii) Railings:

Balconies shall be enclosed by 42" high iron railings. There shall be no horizontal railings.

(iii) Soffits:

The underside of the balconies shall be Eifs.

(iv) Doors:

Doors leading to the balconies shall be sliding type, glass doors with aluminum frames as manufactured by Lincoln. Doors shall not have thermal break.

(5) Exterior entrances:
(i) Exterior doors and frames:
There shall be one main exterior entrance. Door shall be a swinging type, aluminum clad wood door as manufactured by Lincoln. There shall be a standard lock system by Emtek. Door shall have not thermal break.

(ii) Vestibule doors and frames:
Vestibule doors shall be 1.5 hour fire-rated, self-closing steel doors

(iii) Exterior stairs:
There shall be new concrete stairs leading from the front yard down to the cellar.

(iv) Railings:
Stair railings shall be steel.

(v) Mail boxes:
Mailboxes shall be aluminum, USPS approved, flushed against the wall type, located in the common lobby on the 1st floor.

(vi) Lighting:
Adequate lighting shall be provided at the entrance.

(6) Service entrances:
None.

(7) Roof and roof structures:

(i) Type of roofs for all areas:
The roof of the building shall be a flat type roof by Goodyear or approved equal.
(*a*) Material:
The roof material shall be torched down rubber.

(*b*) Insulation:
Insulation shall be achieved through a provision of insulation boards with an R-15 value and batt insulation with an R-19 value.

(c) Surface finish:
The mezzanine terraces, including the terrace allocated as a limited common element and the terrace allocated as a common element, shall be finished for walking with concrete pavers. The pavers are appropriate for daily foot traffic. Pavers will not affect the roof warranty. The roof shall be not be finished for walking.

(*d*) Bond or guarantee:
There shall be a 5-year manufacturer's-warranty on roof material and labor. The warranty period shall begin on the date of installation.

(*e*) Flashing materials including counter flashing:
The roof flashing and counter flashing shall be aluminum.

(ii) Drains:
(*a*) Location, material and type:
The mezzanine terraces shall each be equipped with a cast iron flow control drain. The roof will be equipped with a cast iron flow control drain.

There are no drip pans or leak detection below drains. Limited common element terraces are the responsibility of whoever has access to it. This includes maintaining drains and repairing any damaged caused by leaks.
No secondary roof drainage system is required per code.

(*b*) Gutters and leaders:
None.

(iii) Skylights:
There shall be a skylight at the roof above the common staircase. Skylight shall be 3'x4', glass with an aluminum frame and shall be inoperable.

(iv) Bulkheads:
(*a*) Stairs:
For stair bulkhead/mezzanine construction see **(H)(1)(i)**.
Stairway access to the roof shall comply with FC chapter 10.

(*b*) Elevator:
None.

(*c*) Other:
None.

(v) Metal work at roof levels:
(*a*) Exterior, metal stairs:
None.

(*b*) Vertical ladders, including gooseneck:
There shall be two steel ladders leading to/from the mezzanine terraces to/from the roof.

(*c*) Railings:
There shall be 3'-6" high steel railings enclosing the easterly and westerly walls of the mezzanine terraces. The front and rear walls of said terraces will be enclosed with parapet walls. The roof shall be enclosed with parapet walls. There shall be no horizontal railings.

(*d*) Hatches to roof:
None.

(*e*) Other:
Metal work on roofs shall include the condensers, vents and drains.

(vi) Doors:
Doors leading to the mezzanine terraces shall be sliding type, glass doors with aluminum frames as manufactured by Lincoln. Doors shall have not thermal break.

(vii) Rooftop facilities:
The front mezzanine terrace shall be allocated as a limited common element to Unit 4F. The rear mezzanine terrace shall be allocated as common element to the building. The roof shall be allocated as a common element but shall not be for the use of occupants.

Terraces and/or roofs assigned as limited common elements or common recreation space shall be shown on the Certificate of Occupancy as an accessory to residential space.
Rooftop access is designed in compliance with 2014 NYC Fire code, Section FC 504.4.

8) Fire escapes:
None.

(9) Yard and courts:
There shall be a front yard, a rear yard and an areaway. The front yard shall be allocated as a common element. The areaway shall be allocated as a limited common element to Unit 1R. The rear yard shall be divided between Unit 1R and Unit 2R. The front portion of the rear yard shall be allocated to Unit 1R and shall be accessed via stairs leading from the areaway into the rear yard. The rear portion of the rear will be allocated to Unit 2R and will be accessed via stairs leading from the 2nd floor down into the yard. See plans for details.

(i) Paving:
The areaway shall be paved. The front yard shall be partially paved and partially grass covered. The rear yard shall be grass covered.

(ii) Drainage:
The rear yard shall drain into the soil. The front yard shall be pitched to facilitate drainage, additionally there shall be a drain underneath the stairs leading to the cellar. The areaway shall be equipped with a drain.

(iii)Stairs:
There shall be new concrete stairs leading from front yard to the cellar. There shall be new concrete stairs leading from the cellar areaway to the rear yard. There shall be new steel stairs leading from Unit 2R to the rear yard.

(iv)Railings:
Railings shall be steel.

(v)Fencing:
See **(f) (4).**

(v) Retaining walls:
See **(f) (7)**.

(l0) Interior stair:
Interior stairs and handrails within the duplex units shall be wood. Said stairs shall be winding type and shall not be in compliance with the code. See special risks in offering plan.
(i) Number of stairs of each type:
There shall be one common staircase. Additionally there shall be a set of stairs, comprised of 7 risers in the main lobby, leading from the grade level to the first floor.

(ii) Enclosure:
The enclosures shall 2 hour fire rated. Enclosures shall be partially comprised of exterior building walls and partially comprised of interior partitioning walls constructed of steel studs and 2 layers of gypsum board on each side.

(iii) Stair construction:
The stairs shall be constructed of steel.

(iv) Stringers:
The stringers shall be steel.

(v) Treads:
The treads shall be steel pan filled with concrete.

(vi) Risers:
The risers shall be steel.

(vii) Guard rails:
The guard rails shall be steel.

(viii) Balustrade:
The balustrade shall be steel.

(11) Interior doors and frames:
(i) Unit entrance and interior doors and frames:
Unit entry doors shall be 1.5 hour fire-rated, self-closing steel doors with keyed locks. Interior doors and frames in the apartments shall be solid wood with passage, privacy and dummy locks, as appropriate.

(ii) Corridor doors and frames:
None.

(iii) Stair hall doors and frames:
Stair hall doors shall be 1.5 hour fire-rated, self-closing steel doors.

(iv) Cellar doors and frames:
Cellar doors shall be 1.5 hour fire-rated, self-closing steel doors.

(12) Elevators:
There shall be no elevator.

(i) ***Auxiliary facilities*:**
(1) Laundry rooms:
(i) Location and number of rooms:
Each unit shall have a laundry closet.

(ii) Clothes washers and dryers, number and type:
Sponsor will provide hookups for a stackable washer and electric dryer.

(iii) Room ventilation:
Not applicable.

(iv) Dryer ventilation:
Not applicable as sponsor is providing hookups for electric dryers.

(2) Refuse disposal:
(i) Incinerator(s):
There shall be no incinerators.

(ii) Compactor(s):
There shall be no compactors.

(iii) Approvals by authority having jurisdiction:
Not applicable.

(iv) Initial storage location:
The initial storage location shall be at the front yard.

(v) Pick-up schedule, and whether public or private provider:
Refuse will be the responsibility of the condominium unit owners. Refuse and organics shall be picked up on Tuesdays, Thursdays and Saturdays. Recycling shall be picked up on Tuesdays. Refuse shall be by the NYC Sanitation Department, a public provider.

(3)Bicycle Storage, Package Rooms, Storage rooms:
None.

(j) ***Plumbing and drainage:***

(1) Water supply.
The building is provided with 1 metered domestic water service connected to the City of New York Water Distribution System. Service shall be new 4" copper pipe. Hot and cold water piping shall be properly insulated with ½" fiberglass insulation in compliance with code. Main shut of valve shall be located in the cellar.

(2) Fire protection system:
This building will be fully sprinklered. A wet sprinkler system shall be installed.

(i) Standpipes:
None.

(ii) Hose racks, hoses and nozzles:
None.

(iii)Sprinkler heads:
There will be sprinklers installed in the common stair halls and within the units in living rooms, bedrooms, kitchens, hallways, and miscellaneous other spaces, in accordance with NYC Building Code. Sprinkler heads will be of upright, pendant, concealed, or sidewall types, depending on the locations and installation conditions equipped with a fusible link set to go off at a temperature of 160 degrees Fahrenheit.

(iv) Siamese connection:
There shall be a new Siamese connection in front of the building.

(3) Water storage tank(s) and enclosures:
There shall be no water storage tanks.

(4) Water pressure and how maintained:
This building relies on normal NYC water pressure for raising the water to all floors. There shall be no pumps.

(5) Sanitary sewage system:
There is a combined sanitary and storm drainage system. The sanitary and storm drainage shall be collected from the building and discharged by gravity to the public combined sanitary and storm drainage system.

(i) Sewage piping:
Sewage piping is cast iron.

(ii) Sewage pumps:
None.

(iii) Sewage disposal:
The sewage system carries both waste and sanitary sewage from each apartment.

(6) Permit(s) required:
The plumbing Permit was obtained on 04/18/2019. All required permits will be obtained through the course of work.

(7) Storm drainage system:
There is a combined sanitary and storm drainage system. The storm water run-off will be collected in the drains and shall drain into the public combined sanitary and storm drainage system.

(i) Catch basins:
There shall be no catch basins inside the property.

(ii) Yard and roof drains:
The front yard shall be pitched to facilitate drainage, additionally there shall be a drain underneath the stairs leading to the cellar. The areaway shall be equipped with a drain. The mezzanine terraces shall each be equipped with a drain. The roof shall be equipped with a drain.

(iii) Piping:
All piping and fittings are cast iron.

(iv) Eject or sump pumps:
There shall be a sump pump for the cellar as manufactured by Barnes model #3SEV412.

(k) ***Hot water:***
There shall be individual electric hot water heaters for each unit. Heaters shall be 50 gallon, manufactured by AO Smith model #ENLB-50 with an energy factor of .95. Said hot water heaters come with a 6-year limited tank warranty by the manufacturer.
For heating system see **(m)**.

(l) ***Gas supply:***
There shall be no gas service provided to the building.

(m) ***Air conditioning and heating:***
The cooling systems adequacy is to maintain a 72 degree temperature when the heat temperature outside is 93 degree.

The heating system's adequacy is to maintain a temperature of 68 degrees from 6 a.m. to 10 p.m. and 55 degrees from 10 p.m. to 6 a.m.
Air conditioning and heating shall be accomplished via a ductless split system by Daikin. Model Numbers below.

Unit	Unit type	Model #	Heating Btu/H	Cooling Btu/H	Seer/Eer
1F	Condenser	4MXL36TVJU	36,600	34,400	16.9 /12.5
	Indoor unit	CTXS09LVJU	9,000	9,000	24.5/15.3
	Indoor unit	CTXS12LVJU	12,000	12,000	24.5/15.3
1R	Condenser	4MXL36TVJU	36,600	34,400	16.9 /12.5
	Condenser	2MXL18QMVJU	24,000	36,000	17/12.7
	Indoor unit	CTXS07LVJU	7,000	7,000	19.5
	Indoor unit	CTXS09LVJU	9,000	9,000	24.5/15.3
	Indoor unit	CTXS12LVJU	12,000	12,000	24.5/15.3
2F,2R 3F,3R ,4R	Condenser	4MXL36TVJU	36,600	34,400	16.9 /12.5
	Indoor unit	CTXS09LVJU	9,000	9,000	24.5/15.3
	Indoor unit	CTXS09LVJU	9,000	9,000	24.5/15.3
	Indoor unit	CTXS12LVJU	12,000	12,000	24.5/15.3
4F	Condenser	4MXL36TVJU	36,600	34,400	16.9 /12.5
	Condenser	2MXL18QMVJU	24,000	36,000	17/12.7
	Indoor unit	CTXS07LVJU	7,000	7,000	19.5
	Indoor unit	CTXS09LVJU	9,000	9,000	24.5/15.3
	Indoor unit	CTXS12LVJU	12,000	12,000	24.5/15.3

Air handlers shall be located in each living/dining room, bedroom and hallways.
Condensers shall be located at the roof. All exterior metals including fasteners, shall be corrosion resistant.
Condensers and air handlers shall have a 5-year manufacturer's warranty.
There shall be individual digital thermostats provided for each unit.
Rooftop piping shall be properly insulated with ½" rubber pipe insulation.
The common areas shall be heated with electric baseboard heaters.

(n) *Ventilation:*
The interior bathrooms and kitchens shall be properly ventilated by exhaust fans through vent ducts. Kitchens and bathrooms shall have 75 CFM. Exhaust fans shall have a noise emission rating of .3 sones. The cellar utility room will have a fresh air intake. The cellar accessory spaces have windows for required ventilation. Ventilation shall be adequate and in compliance with all applicable codes.

(o) *Electrical System:*
No generators shall be provided.

(l) Service from main service switchgear:
Electrical Service to the building is provided by Con Edison Company and is three phase, 208 Volts and 400 amps. Wiring shall be BX.

(2) Service to individual units:
Each unit is supplied with single phase, 208 Volts, minimum 100 amps.

(3) Compartment switchgear:
The compartment switchgear shall be located at the cellar.

(4) Unit service:
The electrical service is adequate for a full complement of modern appliances.

(5) Adequacy:
(i) Service:
There shall be an average of 10-16 circuits per apartment. Service shall comply with all applicable codes.

(ii) Lighting and fixtures:
There shall be adequate lighting in each living room, bedroom, bathroom, kitchen and all other miscellaneous spaces in compliance with the code.

(iii) Convenience outlets, appliance outlets:
There shall be approximately, 4-6 outlets in each kitchen and living room; 2-4 outlets in each bedroom; 2 outlets in each hallway, laundry closet and bathroom.

(p) ***Intercommunication and/or door signal systems, security closed circuit TV.***
Each apartment shall be equipped with an audio/video system by Aiphone indoor station model # GT-1M3 and outdoor station model # GT-DMB-N. They shall have a 2 year manufacturer's warranty.
There shall be no other security systems installed.

(q) ***Public area lighting:***
Adequate lighting as required by the NYC Building Code will be provided at the entrances, stair halls, stairs corridors, cellar, yards and other common spaces as follows:
Interior lighting: Luxrite, Model number #LR23654
Exterior lighting: Besa, Model #301957-FR 3019

(r) ***Garages and parking areas:***
There shall be no garages.

(s) ***Swimming pools:***
There shall be no swimming pool at the premises.

(t) ***Tennis courts, playgrounds and recreation facilities.***
There shall be no tennis courts, playgrounds or other recreation facilities.

(u) ***Permits and Certificates:***
The following recurring inspections shall be due once the building is in operation.
- Sprinkler
- Fire alarm
- RPZ

(v) ***Violations:***
All outstanding violations shall be removed prior to the 1st closing.

There are 6 outstanding ECB violations as of December 23, 2019. Sponsor and representatives are working on curing all outstanding violations. See attached schedule A for a list.

(w) *Unit Information:*

Unit No.	Usage	Unit Location	Floor to ceiling height	Gross Square Feet	Number of Bedrooms/ Bathrooms	Limited Common Elements	Gross Square Feet
1F	Residential	Cellar 1st floor	7'-8" 9'-5"	580 545	Studio/1.5	------	------
1R	Residential	Cellar 1st floor	7'-8" 9'-5"	689 688	1/1.5	Areaway Rear Yard	173 559
2F	Residential	2nd floor	9'-4"	755	1/1	------	------
2R	Residential	2nd floor	9'-4"	617	1/1	Rear Yard Stairs	697 49
3F	Residential	3rd floor	8'-6"	796	1/1	------	------
3R	Residential	3rd floor	8'-6"	613	1/1	Balcony	38
4F	Residential	4th floor Mezzanine	8'-6" 8'-6"	796 465	3/2	Terrace	334
4R	Residential	4th floor	8'-6"	613	1/1	Balcony	38

(a) Living/dining rooms shall have the following finishes:

Floors: ¾" thick white oak on plywood underlayment. Floors shall be finished with polyurethane. Floors shall not be manufactured.

Walls, ceilings: Gypsum board; primed and painted with 2 layers.

(b) Bedrooms shall have the following finishes:

Floors: ¾" thick white oak on plywood underlayment. Floors shall be finished with polyurethane. Floors shall not be manufactured.

Walls, ceilings: Gypsum board; primed and painted with 2 layers.

Closets: Closets are finished with a minimum of 1 shelf and/or rod.

(c) Kitchens shall have the following finishes:

Floors: ¾" thick white oak on plywood underlayment. Floors shall be finished with polyurethane. Floors shall not be manufactured.

Walls, ceilings: Gypsum board; primed and painted with 2 layers.

Cabinets: Wood.

Countertops: Quartz.

Backsplash: Quartz

Sink: Stainless steel.

Appliances: Sponsor will provide kitchen appliances as follows:

- Stove by Frigidaire model # FGIF3036TD
- Dishwasher by Bosch model #SHE3AR75UC
- Microwave by GE model #JVM3160RFSS
- Fridge/freezer by Frigidaire model #FPHT1897TF

(d) Bathrooms shall be equipped as follows:

Vanity: Vero Air

Tub: Rubix

Sink: Duravit, model # VA602405252

Toilet: Toto, model # CST412MF.

Floors: Tiled.

Walls: Tiled.

Ceilings: Gypsum board; primed and painted with 2 layers.

(x) *Finish schedule of spaces other than units*:

Location	Floor	Walls and Ceilings
Lobby	Concrete	Primed and painted gypsum board
Stair halls		
Utility rooms		
Cellar corridor		

(y) *Safety and warning devices:*
Smoke and carbon monoxide detectors provided for each dwelling unit shall be hard wired as per local Law 62/81 and R.S. 17 of the NYC Building Code. There shall be a FA central system installed at the cellar.

(z) *Additional information required:*
(1) A plot plan showing landscape features, street, and outside dimensions of the building, are herewith attached.
(2) Floor plans for each line or type of unit drawn to scale, indicating room dimensions and unit boundaries, are herewith attached.
(3) The cellar floor has an approximate floor to ceiling height of 7'-8". The 1st floor has an approximate floor to ceiling height of 9'-5". The 2nd floor has an approximate floor to ceiling height of 9'-4", the new 3rd through mezzanine floors shall have an approximate floor to ceiling height of 8'-6".

Further Development
The sponsor shall not construct any additional units or phases after completion of the structure, as per DOB approved plans.

***Asbestos*:**
There is no asbestos per Asbestos Assessment Report. See attached.

***Lead-based paint*:**
This statement is to disclose that there will be no lead paint in this building construction of this condominium, as per approved plans.

This report may not be construed as a guarantee or warranty. The sponsor reserves the right to provide different equipment by different manufacturers, which are equal to or better, than those listed above.

Schedule A to Report

NYC Department of Buildings

ECB Query By Location

Premises: 1296 PARK PLACE BROOKLYN **BIN: 3036431 Block: 1371 Lot: 31 CB: 308**

Dept. of Buildings Violations & Compliance	ECB Hearings
Issued = 41 **Open (Certificate of Correction Required)** = 6	**Completed / Defaulted** = 37 **Pending** = 4

OATH/ECB Number	Certification Status	Respondent	OATH/ECB Hearing Status	Violation Date	Infraction Codes	OATH/ECB Penalty Due
34652714R	OPEN - NO COMPLIANCE RECORDED	PATRICK HENRY	WRITTEN OFF	06/04/2008	BQ7, BQ5, BQ7	$0.00
	Severity: NON-HAZARDOUS	**Inspect Unit:** BROOKLYN CONSTRUCTION		**Viol Type:** QUALITY OF LIFE		
35445453M	OPEN - CERTIFICATE DISAPPROVED	AMERICAN BUILDERS GROUP GC618837	PENDING	08/22/2019	106	$0.00
	Severity: CLASS - 1	**Inspect Unit:** CONSTRUCTION SAFETY ENFORCEMENT		**Viol Type:** CONSTRUCTION		
35445455X	OPEN - CERTIFICATE DISAPPROVED	AMERICAN BUILDERS GROUP GC618837	PENDING	08/22/2019	115	$0.00
	Severity: CLASS - 1	**Inspect Unit:** CONSTRUCTION SAFETY ENFORCEMENT		**Viol Type:** CONSTRUCTION		
35309676N	OPEN - NO COMPLIANCE RECORDED	RONALD B CAGAN PE54060	IN VIOLATION	01/10/2018	106	$14.99
	Severity: CLASS - 1	**Inspect Unit:** INTERIOR DEMOLITION		**Viol Type:** CONSTRUCTION		
35445454Y	OPEN - CERTIFICATE DISAPPROVED	AMERICAN BUILDERS GROUP GC618837	PENDING	08/22/2019	106	$0.00
	Severity: CLASS - 1	**Inspect Unit:** CONSTRUCTION SAFETY ENFORCEMENT		**Viol Type:** CONSTRUCTION		
35445452K	OPEN - CERTIFICATE DISAPPROVED	AMERICAN BUILDERS GROUP GC618837	PENDING	08/22/2019	106	$0.00
	Severity: CLASS - 1	**Inspect Unit:** CONSTRUCTION SAFETY ENFORCEMENT		**Viol Type:** CONSTRUCTION		

1296 PARK PLACE
BROOKLYN, NY 11213

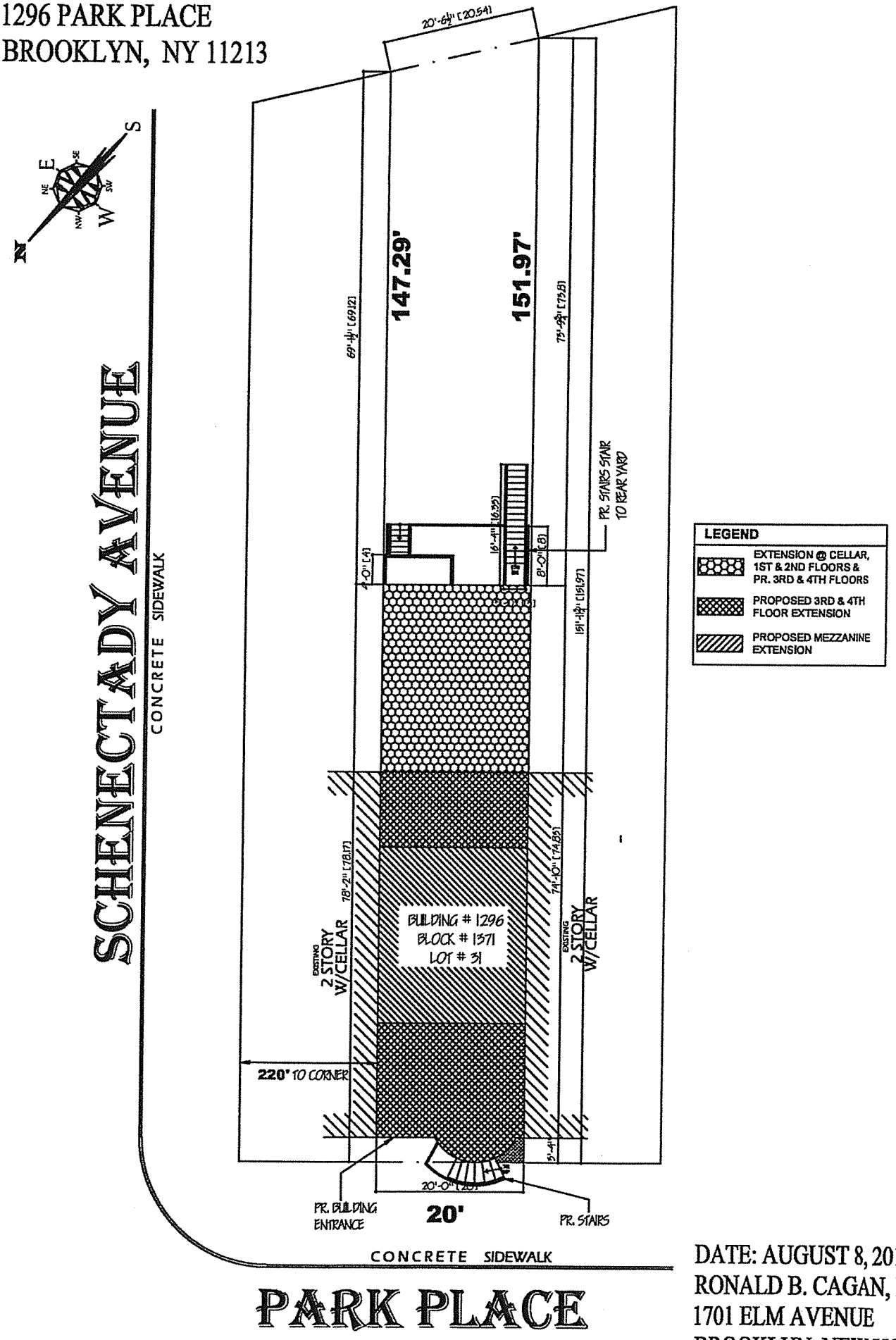

DATE: AUGUST 8, 2019
RONALD B. CAGAN, P.E.
1701 ELM AVENUE
BROOKLYN, NEW YORK 11230

1296 PARK PLACE
BROOKLYN, NY 11213

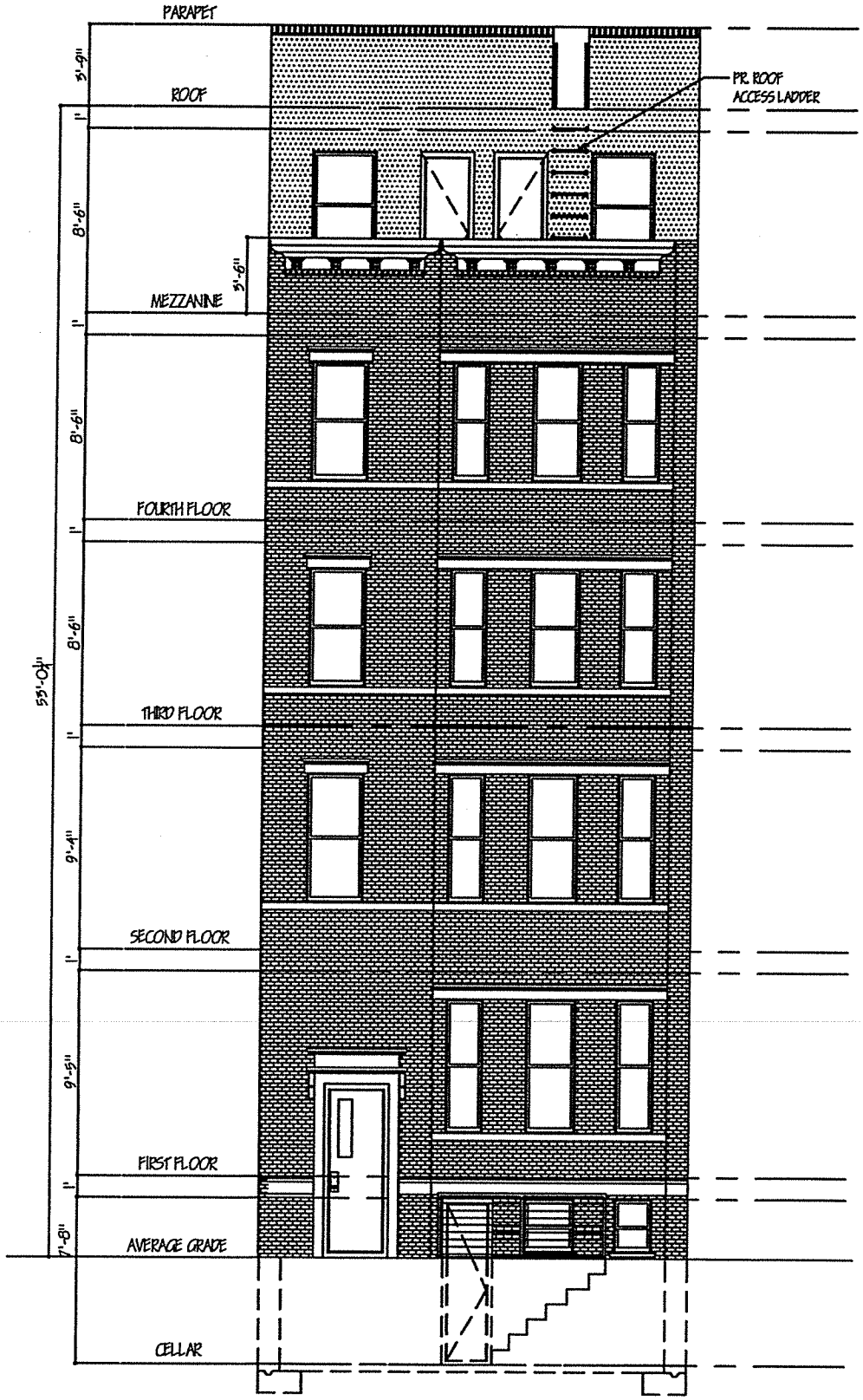

FRONT ELEVATIONS

DATE: AUGUST 8, 2019
RONALD B. CAGAN, P.E.
1701 ELM AVENUE
BROOKLYN, NEW YORK 11230

1296 PARK PLACE
BROOKLYN, NY 11213

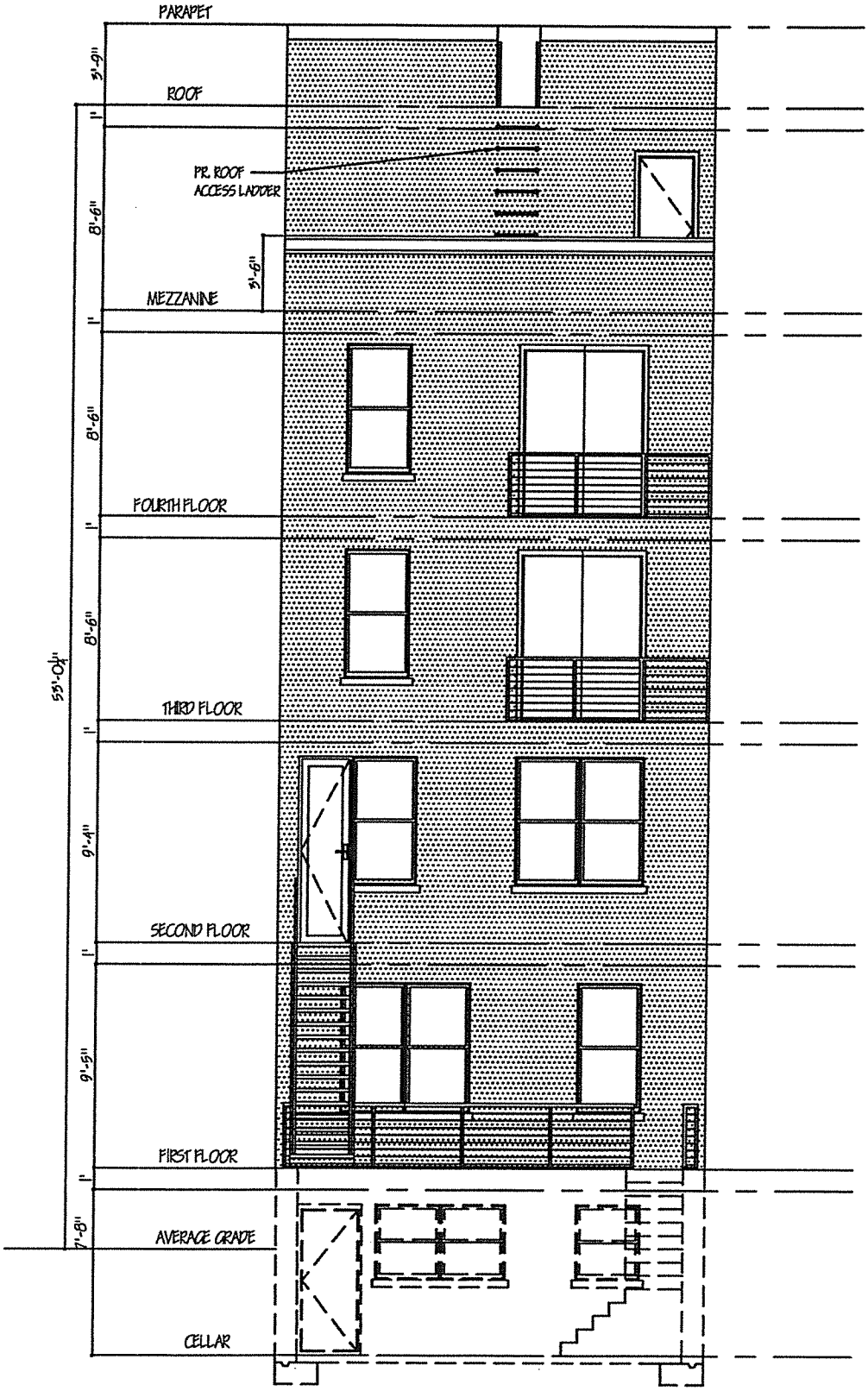

REAR ELEVATIONS

DATE: AUGUST 8, 2019
RONALD B. CAGAN, P.E.
1701 ELM AVENUE
BROOKLYN, NEW YORK 11230

1296 PARK PLACE
BROOKLYN, NY 11213

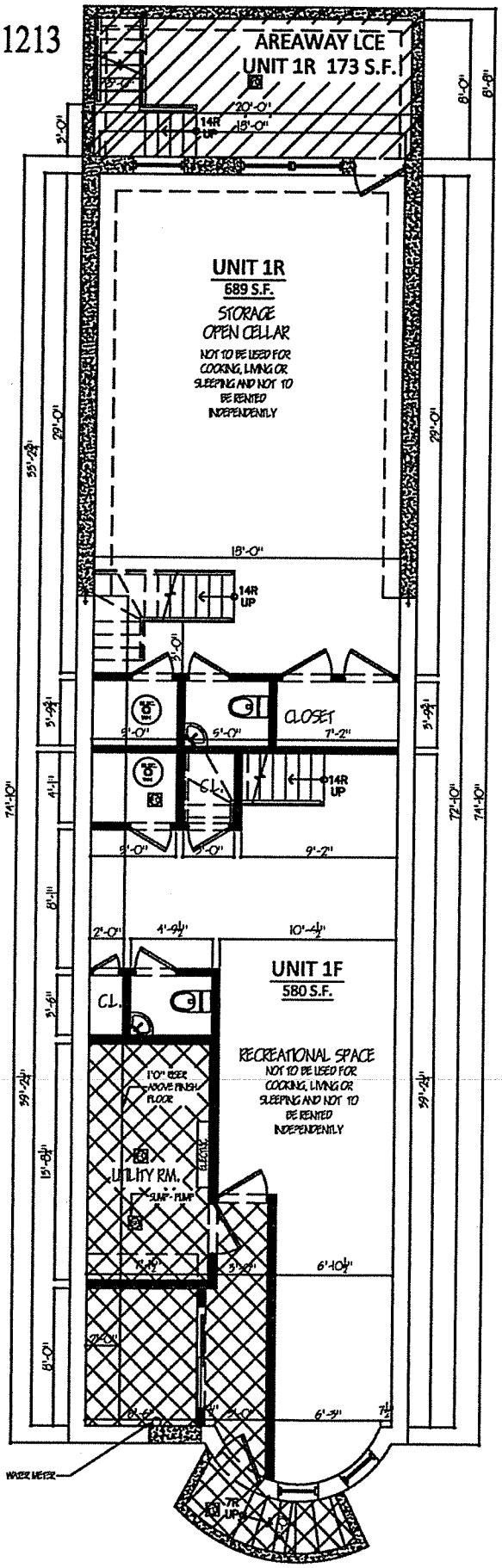

CELLAR FLOOR PLAN

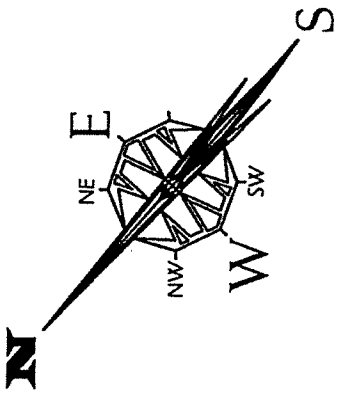

LEGEND	
REF.	REFRIGERATOR
D/W.	DISH WASHER
W/D	WASHER/DRYER
FD	FLOOR DRAIN
RD	ROOF DRAIN
M/W	MICROWAVE

HATCH LEGEND

- UNIT LOCATION
- COMMON ELEMENT
- LIMITED COMMON ELEMENT
- FDNY ACCESS PATH

DATE: AUGUST 8, 2019

RONALD B. CAGAN, P.E.
1701 ELM AVENUE
BROOKLYN, NEW YORK 11230

1296 PARK PLACE
BROOKLYN, NY 11213

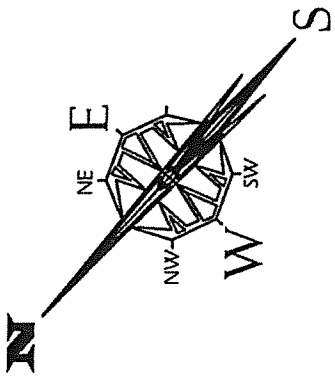

LEGEND	
REF.	REFRIGERATOR
D/W.	DISH WASHER
W/D	WASHER/DRYER
FD	FLOOR DRAIN
RD	ROOF DRAIN
M/W	MICROWAVE

HATCH LEGEND

- UNIT LOCATION
- COMMON ELEMENT
- LIMITED COMMON ELEMENT
- FDNY ACCESS PATH

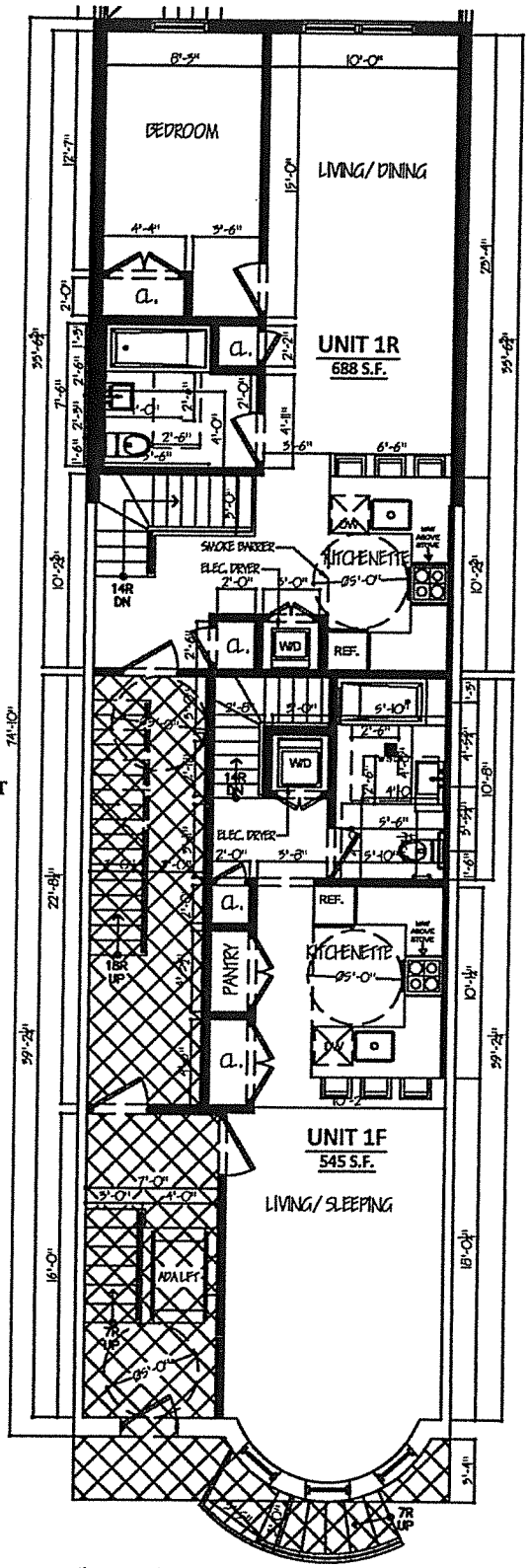

FIRST FLOOR PLAN

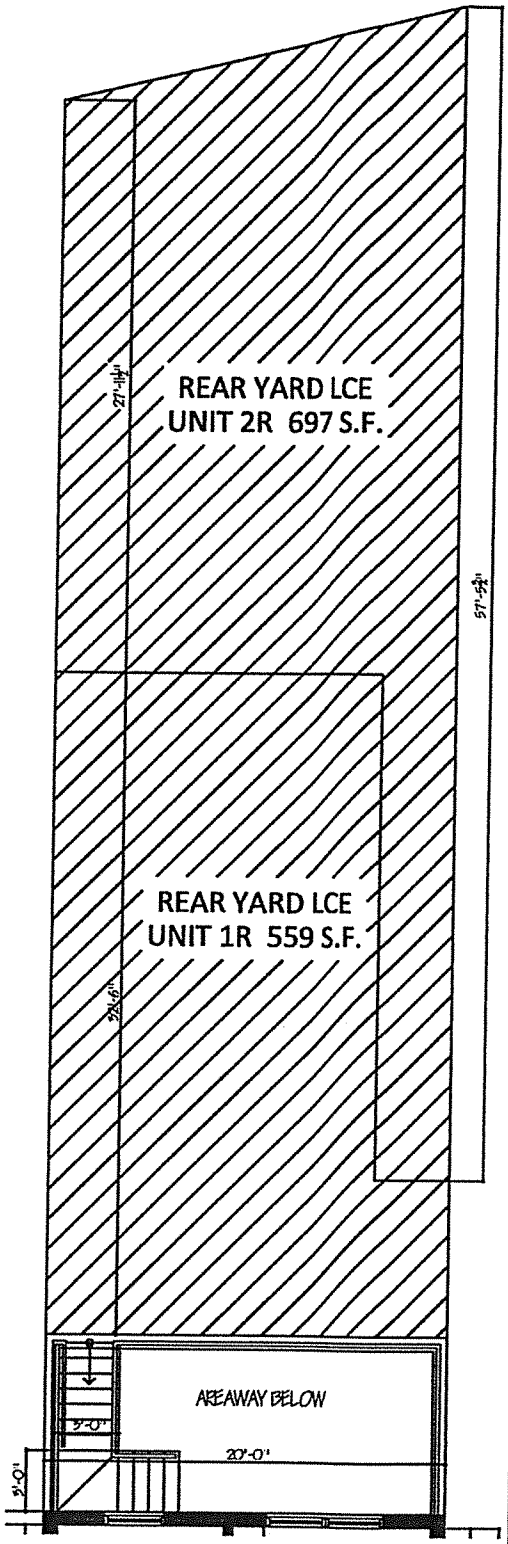

FIRST FLOOR REAR YARD CONTINUED

DATE: AUGUST 8, 2019

RONALD B. CAGAN, P.E.
1701 ELM AVENUE
BROOKLYN, NEW YORK 11230

1296 PARK PLACE
BROOKLYN, NY 11213

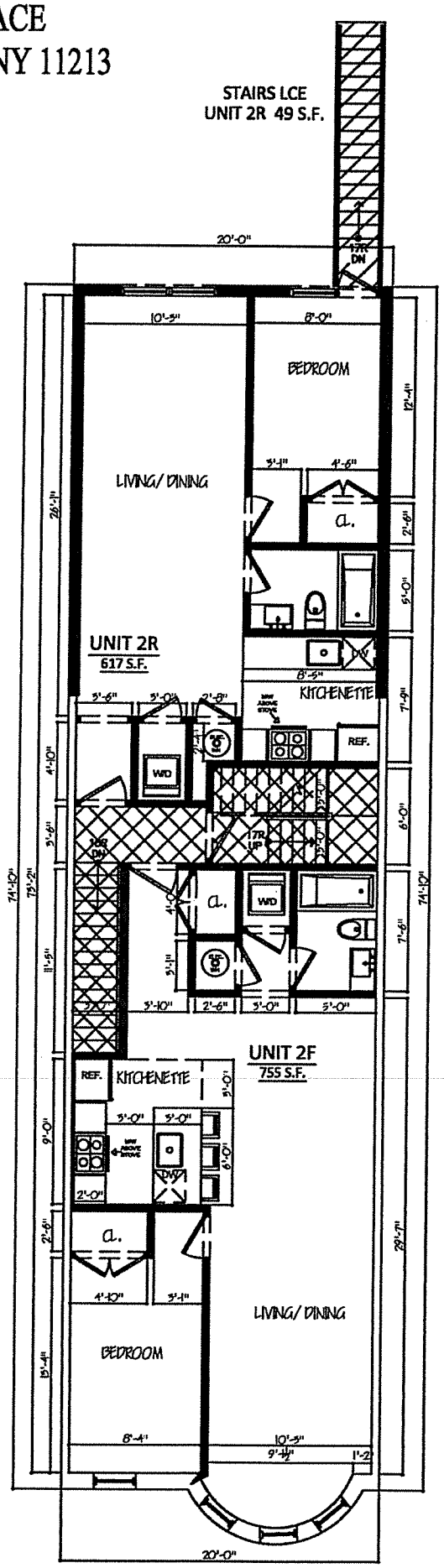

SECOND FLOOR PLAN

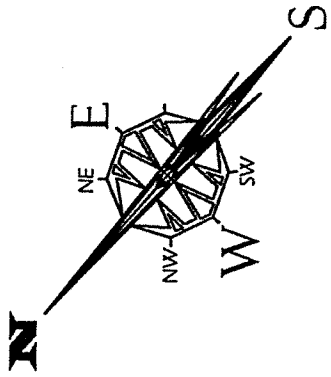

LEGEND	
REF.	REFRIGERATOR
D/W.	DISH WASHER
W/D	WASHER/DRYER
FD	FLOOR DRAIN
RD	ROOF DRAIN
M/W	MICROWAVE

HATCH LEGEND

- UNIT LOCATION
- COMMON ELEMENT
- LIMITED COMMON ELEMENT
- FDNY ACCESS PATH

DATE: AUGUST 8, 2019
RONALD B. CAGAN, P.E.
1701 ELM AVENUE
BROOKLYN, NEW YORK 11230

1296 PARK PLACE
BROOKLYN, NY 11213

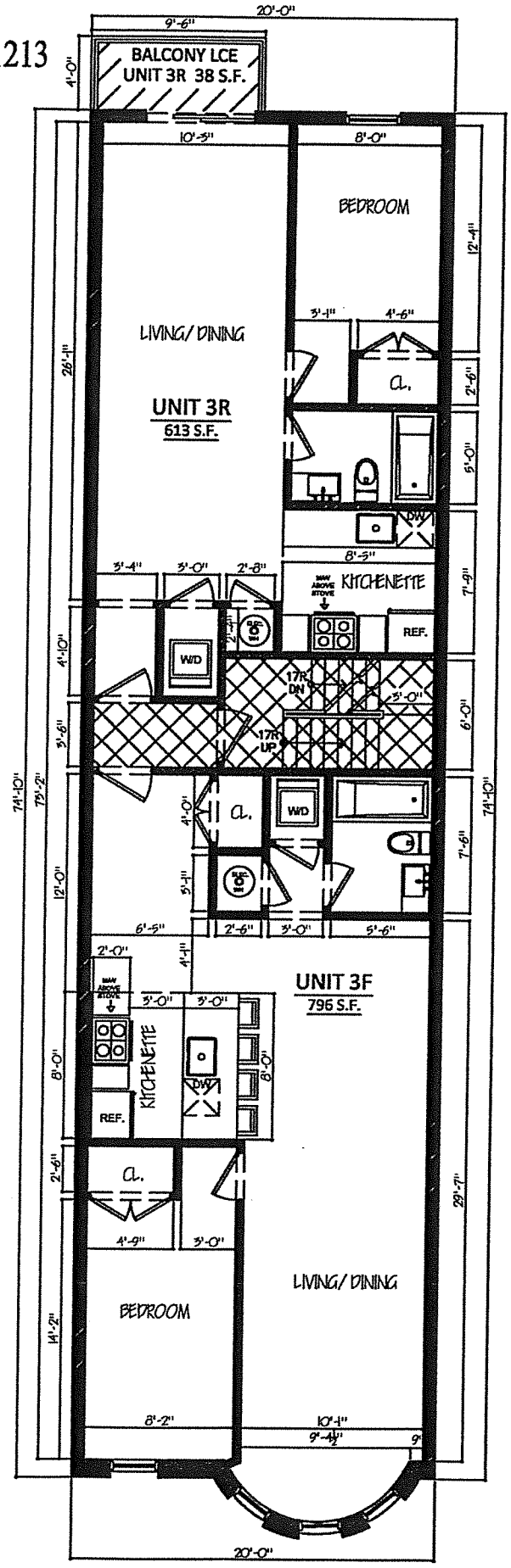

THIRD FLOOR PLAN

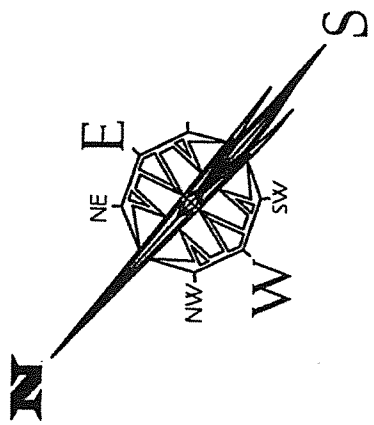

LEGEND	
REF.	REFRIGERATOR
D/W.	DISH WASHER
W/D	WASHER/DRYER
FD	FLOOR DRAIN
RD	ROOF DRAIN
M/W	MICROWAVE

HATCH LEGEND

- UNIT LOCATION
- COMMON ELEMENT
- LIMITED COMMON ELEMENT
- FDNY ACCESS PATH

DATE: AUGUST 8, 2019
RONALD B. CAGAN, P.E.
1701 ELM AVENUE
BROOKLYN, NEW YORK 11230

1296 PARK PLACE
BROOKLYN, NY 11213

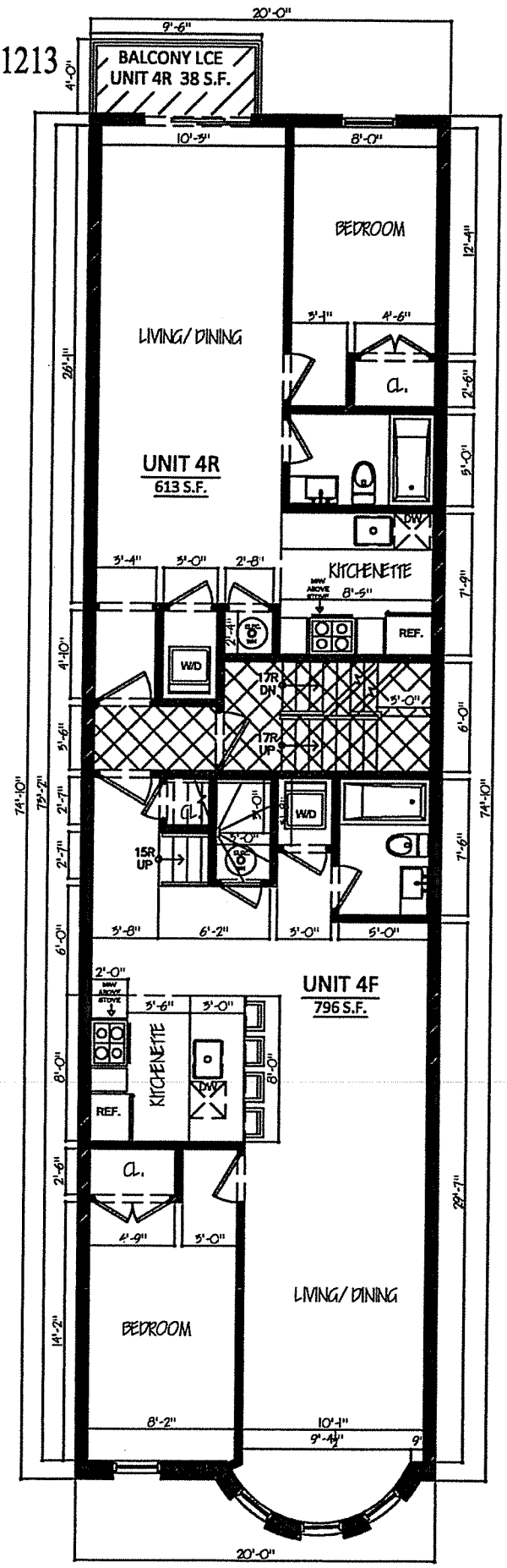

FOURTH FLOOR PLAN

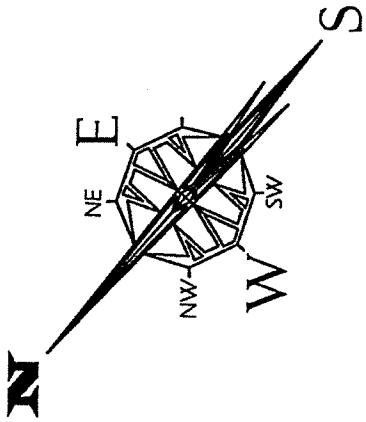

LEGEND	
REF.	REFRIGERATOR
D/W.	DISH WASHER
W/D	WASHER/DRYER
FD	FLOOR DRAIN
RD	ROOF DRAIN
M/W	MICROWAVE

HATCH LEGEND

- UNIT LOCATION
- COMMON ELEMENT
- LIMITED COMMON ELEMENT
- FDNY ACCESS PATH

DATE: AUGUST 8, 2019

RONALD B. CAGAN, P.E.
1701 ELM AVENUE
BROOKLYN, NEW YORK 11230

1296 PARK PLACE
BROOKLYN, NY 11213

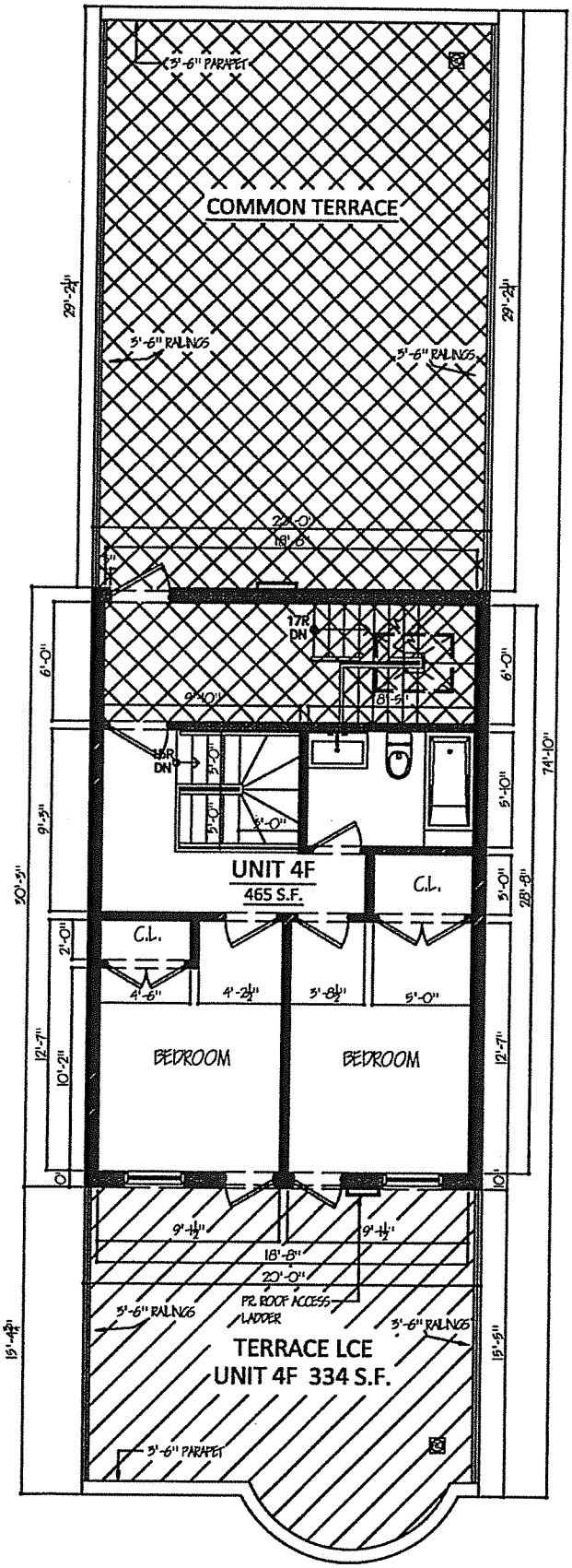

MEZZANINE FLOOR PLAN

LEGEND	
REF.	REFRIGERATOR
D/W.	DISH WASHER
W/D	WASHER/DRYER
FD	FLOOR DRAIN
RD	ROOF DRAIN
M/W	MICROWAVE

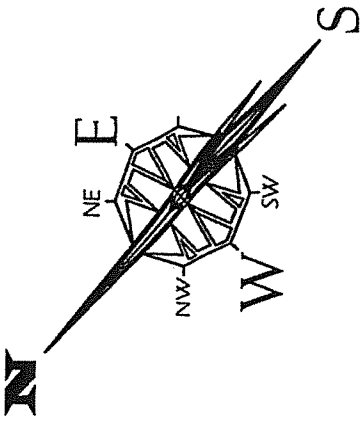

HATCH LEGEND

- UNIT LOCATION
- COMMON ELEMENT
- LIMITED COMMON ELEMENT
- FDNY ACCESS PATH

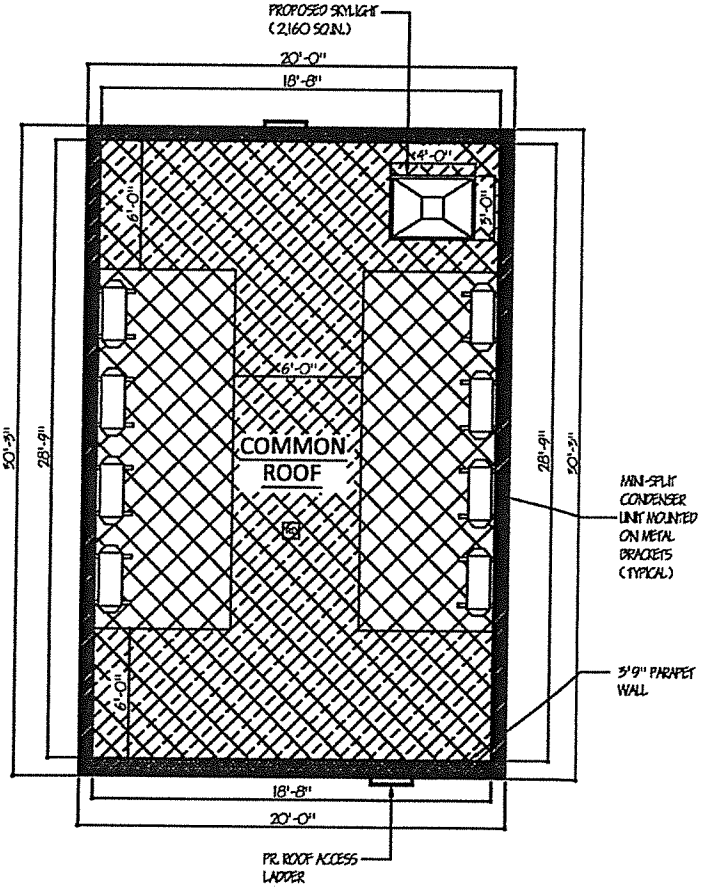

ROOF FLOOR PLAN

DATE: AUGUST 8, 2019
RONALD B. CAGAN, P.E.
1701 ELM AVENUE
BROOKLYN, NEW YORK 11230

DOCUMENT NUMBER 2

PURCHASE AGREEMENT

The Law Office of Jay Lichtman, P.C.
68 Jay Street, Suite 420
Brooklyn, New York 11201

PURCHASE AGREEMENT

between

1296 Park Place PH LLC

and

_____

For Unit Number __ in
The 1296 Park Place Condominium
1296 Park Place
Brooklyn, New York

TABLE OF CONTENTS

1. Definitions 1
2. Plan 2
3. Agreement to Purchase and Sell 3
4. Purchase Price 3
5. Procedure to Purchase 4
6. Closing Contingent on Plan Being Declared Effective 7
7. Closing Date and Place 7
8. The Deed 8
9. State of Title 8
10. Title Company Approval 9
11. Sponsor's Inability to Convey Title 9
12. Purchaser's Remedies 9
13. Closing Adjustments 9
14. Purchaser's Closing Costs 10
15. Rent Security Deposit 12
16. Power of Attorney to Board of Managers and Sponsor 13
17. Transfer Tax Return 14
18. Events of Default 14
19. Appliances and Equipment 15
20. Construction 15
21. Inspection of Unit 16
22. Possession; Risk of Loss 16
23. No Representation 17
24. Notices 18
25. Broker 18
26. No Lien; Agreement Subject to Mortgage 18
27. Entire Agreement 19
28. Joint Purchasers 19
29. Liability of Sponsor 19
30. Further Assurances 20
31. Severability 20
32. Strict Compliance 20
33. Governing Law 20
34. Gender 20
35. Certain References 20
36. Captions 20
37. Successors and Assigns 21
38. No Oral Changes 21
39. Acceptance of Purchase Agreement 21
40. Purchase Agreement Not Conditioned on Financing 21
41. Building Smoking Policy 21
42. Lead Based Paint 22
43. Agreement Not Assignable; Binding Effect 23

EXHIBIT A: PERMITTED ENCUMBRANCES 24
EXHIBIT B: TERMS OF FINANCING CONTINGENCY RIDER 27

EXHIBIT C: INSPECTION STATEMENT 31
ADJUSTMENTS AND/OR REPAIRS 33
EXHIBIT D: SPONSOR'S LIMITED WARRANTY 34
EXHIBIT E: LEAD-BASED PAINT RIDER 38

PURCHASE AGREEMENT

For Unit Number ____ in
The 1296 Park Place Condominium
1296 Park Place
Brooklyn, New York

(Please execute in quadruplicate)

THIS AGREEMENT is made as of _____, 20___ between 1296 Park Place PH LLC (hereinafter called the "Sponsor"), having an address at 1208 Avenue M # 2394, Brooklyn, New York 11230, and _____ (hereinafter called the "Purchaser"), having an address at _____, and The Law Office of Jay Lichtman P.C., (hereinafter called the "Escrow Agent"), having an address at 68 Jay Street, Suite 420, Brooklyn, NY 11201.

1. Definitions

The following terms shall have the meanings ascribed to them:

(i) "Agreement": This Purchase Agreement. "Amendment": An amendment to the offering Plan accepted for filing by the Attorney General, or if applicable an amendment to the recorded condominium Declaration.

(ii) "Attorney General": The Attorney General of the State of New York.

(iii) "Balance": the amount set forth in paragraph 4.

(iv) "Building": shall mean the structure known as 1296 Park Place, Brooklyn, New York.

(v) "Business day": Any day that is not a Saturday or Sunday or legal holiday of the State of New York or U.S. Government.

(vi) "Claim": any kind of claim, right or cause for Lawsuit or Lawsuit.

(vii) "Closing Date", "closing", "closing of title": and words of similar import are used synonymously and mean the settlement of the mutual obligations of the Sponsor and Purchaser under this Purchase Agreement, including the payment to Sponsor of the Purchase Price and the delivery to Purchaser of the deed transferring full ownership (fee simple title) to the Unit on the terms set forth in this Agreement.

(viii) "Commitment": A written offer to make a loan to Purchaser, with or without recourse, whether or not conditional upon any factor, secured by a first mortgage on the Unit.

(ix) "Condominium": shall mean The 1296 Park Place Condominium.

(x) "Declaration": shall mean the Declaration of The 1296 Park Place Condominium establishing ownership of the Property.

(xi) "Deed": The deed described in paragraph 8 conveying the Unit to the Purchaser.

(xii) "Department of Law": The Department of Law of the State of New York, which is administered by the Attorney General.

(xiii) "Include", "includes", "including", "such as", "for example" and similar words: Whenever these words precede a list of one or more items, the list is not to be limited to the item(s) mentioned and shall always be construed as though followed by the words "but not limited to".

(xiv) "Indemnify": or a derivation thereof: this includes to defend and hold harmless.

(xv) "Institutional Lender": A bank, saving bank, savings and loan association, trust company, credit union of which Purchaser is a member, licensed mortgage banker, insurance or governmental entity duly authorized to make a loan secured by a first mortgage on the unit.

(xvi) "Plan": shall mean the Offering Plan to convert the Property to condominium ownership and any Amendments thereto filed prior to the date upon which Purchaser signs this Agreement.

(xvii) "Property": shall mean the Building and the land on which it is erected, which are to be submitted to condominium ownership pursuant to Article 9-b of the Real Property Law.

(xviii) "Purchase Price": The Purchase Price of the Unit set forth in paragraph 4.

(xix) "Notice": to Purchaser shall include facsimile transmission to Purchaser or Purchaser's attorney. Seller's attorney may send all notices to Purchaser's attorney and/or Purchaser via facsimile. A facsimile confirmation printout by Seller's attorney showing transmission was complete is sufficient evidence that the facsimile has been transmitted and the notice has been served.

All other terms not defined elsewhere herein shall have the meanings ascribed to them in the Plan.

2. Plan

Purchaser acknowledges having received and read the Plan at least three (3) full business days prior to Purchaser's signing this Purchase Agreement. Purchaser hereby adopts, accepts and approves the Plan (including, without limitation, the proposed Condominium Documents

contained in Part II of the Plan) and agrees to abide and be bound by the terms and conditions thereof, as well as all Amendments to the Plan duly filed by Sponsor (including, without limitation, amendments involving any changes, modifications, or updating of the estimated Common Charges, the estimated real estate taxes to be paid by Purchaser, or the "Schedule B--Budget for First Year of Condominium Operation" of The 1296 Park Place Condominium. Any such amendments shall neither excuse Purchaser from performing Purchaser's obligations hereunder nor entitle Purchaser to any offset or credit against the Purchase Price and may be made by Sponsor without Purchaser's consent or approval unless such amendment triggers a right of rescission for Purchaser in accordance with applicable laws. The Plan is hereby incorporated in this Agreement with the same force and effect as if set forth at length. In the event of any inconsistency or conflict between the provisions of this Agreement and those contained in the Plan, the provisions of the Plan shall govern and be binding. Purchaser acknowledges having had full opportunity to examine all documents, and investigate all statements, made herein and in the Plan.

3. Agreement to Purchase and Sell

Purchaser agrees to purchase from Sponsor, and Sponsor agrees to sell to Purchaser, for the Purchase Price Stated in paragraph 4, the unit designated as Unit Number _____ (hereinafter called the "Unit") in the Declaration, together with its appurtenant interest (hereinafter called the "Common Interest") in the Common Elements, on and subject to, the terms and conditions set forth herein.

4. Purchase Price

A. The purchase price for the Unit (exclusive of closing adjustments and costs referred to in Paragraphs 13 and 14 below) is $ _____ (hereinafter called the "Purchase Price"), which Purchaser agrees to pay to the Sponsor, as follows:

(i) $ _____ (hereinafter called the "Down Payment") is due on Purchaser's signing and submitting of this Agreement and is to be paid by Purchaser's personal check, receipt of which (subject to collection) is hereby acknowledged by Sponsor;

(ii) $ _____ (hereinafter called the "Balance"), constituting the balance of the Purchase Price, is due on the delivery to Purchaser of the deed to the Unit and must be paid by Purchaser's certified check or official cashier's check, in either event drawn on a bank that is a member of the New York Clearing House Association.

B. The payment of the Balance and acceptance of deed to the Unit by Purchaser shall constitute Purchaser's recognition that Sponsor has satisfactorily performed those obligations stated in the Plan and this Agreement to be performed by Sponsor prior to closing. However, nothing herein contained shall excuse Sponsor from performing those obligations (if any) expressly stated herein or in the Plan to be performed subsequent to the closing.

C. Purchaser is not required to pay the Balance or accept title to the Unit unless concurrently with, or prior to, closing all the prerequisites set forth under "Closing and Terms of Sale"

in Part I of the Plan are met.

The obligations of a purchaser under a Purchase Agreement are not conditioned on obtaining financing. Any prospective purchaser who executes a Purchase Agreement and does not obtain financing may lose his or her deposit if he or she is unable to otherwise raise the monies for the balance of the purchase price. Prospective purchasers who require financing are advised to consult with a lending institution before execution of a Purchase Agreement. No representation is made by Sponsor as to the availability or cost of such financing.

THIS PURCHASE AGREEMENT IS NOT CONDITIONED UPON A PURCHASER SECURING SATISFACTORY FINANCING. THE SPONSOR MAY, AT ITS OPTION, CONDITION THE CONTRACT UPON FINANCING, PROVIDED THAT PURCHASER AND SPONSOR BOTH PROPERLY COMPLETE AND INITIAL A FINANCING CONTINGENCY RIDER, THE FORM OF WHICH IS ANNEXED HERETO AS EXHIBIT "B".

SPONSOR IS NOT OBLIGATED TO EXTEND OR ARRANGE FINANCING. NO REPRESENTATION IS MADE THAT BANK FINANCING WILL BE AVAILABLE TO PURCHASER OR AS TO THE AMOUNT, TERMS AND CONDITIONS UPON WHICH SUCH FINANCING MAY BE GRANTED OR THE COST TO OBTAIN SAME.

5. Procedure to Purchase

(i) The Law Office of Jay Lichtman P.C., with an address at 68 Jay Street, Suite 420, Brooklyn, NY 11201, telephone number (347) 504-1724, shall serve as escrow agent ("Escrow Agent") for Sponsor and Purchaser. Escrow Agent has designated the following attorneys to serve as signatories: Jay Lichtman, Esq. All designated signatories are admitted to practice law in the State of New York. Neither the Escrow Agent nor any authorized signatories on the account are the Sponsor, Selling Agent, Managing Agent, or any principal thereof, or have any beneficial interest in any of the foregoing.

(ii) Escrow Agent and all authorized signatories hereby submit to the jurisdiction of the State of New York and its Courts for any cause of action arising out of the Purchase Agreement or otherwise concerning the maintenance of release of the Deposit from escrow.

(iii)The Escrow Agent has established the escrow account at J.P. Morgan Chase Bank, N.A., located at 136 Front Street, Brooklyn, NY 11201 ("Bank"), a bank authorized to do business in the State of New York. The escrow account is entitled "The Law Office of Jay Lichtman P.C. Attorney Escrow Account" ("Escrow Account"). The Escrow Account is an IOLA account. The Escrow Account is federally insured by the FDIC at the maximum amount of $250,000 per deposit. Any deposit in excess of $250,000 will not be insured, unless Escrow Agent has established multiple accounts on behalf of Purchaser at various institutions. Additionally, if Purchasers have accounts at the same bank that holds escrowed funds, Purchaser's funds at the escrow bank factor into the $250,000.00 insurance limit.

(iv)All Deposits received by Purchaser shall be in the form of checks, money orders, wire transfers, or other valid instruments, and shall be made payable to or endorsed by the Purchaser to the order of "The Law Office of Jay Lichtman as Attorney."

(v) The Escrow Account is an IOLA account with no interest accrued to the benefit of the either the Sponsor or the purchaser. An IOLA account is a special segregated escrow account maintained by an attorney in which the interest earned is paid to the State of New York. It is not anticipated that any interest will be earned thereon. If at some future point, the Offering Plan is amended to provide that the account will be a non-IOLA account, then the interest rate for all deposits made into the Escrow Account shall be the prevailing rate for such accounts. Interest shall begin to accrue upon placing the deposit into the Escrow Account. All interest earned thereon shall be paid to or credited to the Purchaser at closing. No fees of any kind may be deducted from the Escrow Account, and the Sponsor shall bear all costs associated with the maintenance of the Escrow Account.

(vi) Within five (5) business days after the Purchase Agreement has been tendered to Escrow Agent along with the Deposit, the Escrow Agent shall sign the Purchase Agreement and place the Deposit into the Escrow Account. Within ten (10) business days of the placing the deposit in the Escrow Account, Escrow Agent shall provide written notice to Purchaser and Sponsor, confirming the Deposit. The notice shall provide the account number and the initial interest rate to be earned on the Deposit. Any Deposits made for upgrades, extras, or custom work shall be initially deposited into the Escrow Account, and released in accordance to the terms of the Purchase Agreement.

(vii) The Escrow Agent is obligated to send notice to the Purchaser once the Deposit is placed in the Escrow Account. If the Purchaser does not receive notice of such deposit within fifteen (15) business days after tender of the Deposit, he or she may cancel the Purchase Agreement within ninety (90) days after tender of the Purchase Agreement and Deposit to Escrow Agent. Complaints concerning the failure to honor such cancellation requests may be referred to the New York State Department of Law, Real Estate Finance Bureau, 28 Liberty Street, 21st Floor, New York, NY 10005. Rescission shall not be afforded where proof satisfactory to the Attorney General is submitted establishing that the Deposit was timely placed in the Escrow Account in accordance with the New York State Department of Law's regulations concerning Deposits and requisite notice was timely mailed to the Purchaser.

(viii) All Deposits, except for advances made for upgrades, extras, or custom work received in connection with the Purchase Agreement, are and shall continue to be the Purchaser's money, and may not be comingled with any other money or pledged or hypothecated by Sponsor, as per GBL § 352-h.

(ix) Under no circumstances shall Sponsor seek or accept release of the Deposit of a defaulting Purchaser until after consummation of the Plan, as evidenced by the acceptance of a post-closing amendment by the New York State Department of Law. Consummation of the Plan does not relieve the Sponsor of its obligations pursuant to GBL §§ 352-e(2-b) and 352-h.

(x) The Escrow Agent shall release the Deposit if so directed:

(a) pursuant to terms and conditions set forth in the Purchase Agreement in upon closing

of title to the Unit; or

(b) in a subsequent writing signed by both Sponsor and Purchaser; or

(c) by a final, non-appealable order or judgment of a court.

If the Escrow Agent is not directed to release the Deposit pursuant to paragraphs (a) through (c) above, and the Escrow Agent receives a request by either party to release the Deposit, then the Escrow Agent must give both the Purchaser and Sponsor prior written notice of not fewer than thirty (30) days before releasing the Deposit. If the Escrow Agent has not received notice of objection to the release of the Deposit prior to the expiration of the thirty (30) day period, the Deposit shall be released and the Escrow Agent shall provide further written notice to both parties informing them of said release. If the Escrow Agent receives a written notice from either party objecting to the release of the Deposit within said thirty (30) day period, the Escrow Agent shall continue to hold the Deposit until otherwise directed pursuant to paragraphs (a) through (c) above. Notwithstanding the foregoing, the Escrow Agent shall have the right at any time to deposit the Deposit contained in the Escrow Account with the clerk of the county where the unit is located and shall give written notice to both parties of such deposit.

The Sponsor shall not object to the release of the Deposit to:

(a) a Purchaser who timely rescinds in accordance with an offer of rescission contained in the Plan or an Amendment to the Plan; or

(b) all Purchasers after an Amendment abandoning the Plan is accepted for filing by the Department of Law.

The Department of Law may perform random reviews and audits of any records involving the Escrow Account to determine compliance with all applicable statutes and regulations.

(xi) Any provision of the Purchase Agreement or separate agreement, whether oral or in writing, by which a Purchaser purports to waive or indemnify any obligation of the Escrow Agent holding any Deposit in trust is absolutely void. The provisions of the Attorney General's regulations and GBL §§ 352-e(2-b) and 352-h concerning escrow trust funds shall prevail over any conflicting or inconsistent provisions in the Purchase Agreement, Plan, or any amendment thereto.

(xii) Escrow Agent shall maintain the Escrow Account under its direct supervision and control.

(xiii) A fiduciary relationship shall exist between Escrow Agent and Purchaser, and Escrow Agent acknowledges its fiduciary and statutory obligations pursuant to GBL §§ 352-e(2-b) and 352(h).

(xiv) Escrow Agent may rely upon any paper or document which may be submitted to it in connection with its duties under this Purchase Agreement and which is believed by Escrow Agent to be genuine and to have been signed or presented by the proper party or

parties and shall have no liability or responsibility with respect to the form, execution, or validity thereof.

(xv) Sponsor agrees that it shall not interfere with Escrow Agent's performance of its fiduciary duties and statutory obligations as set forth in GBL §§ 352-e(2-b) and 352-(h) and the New York State Department of Law's regulations.

(xvi) Sponsor shall obtain or cause the selling agent under the Plan to obtain a completed and signed Form W-9 or W-8, as applicable, from Purchaser and deliver such form to Escrow Agent together with the Deposit and this Purchase Agreement.

(xvii) Prior to release of the Deposit, Escrow Agent's fees and disbursements shall neither be paid by Sponsor from the Deposit nor deducted from the Deposit by any financial institution under any circumstance.

(xviii) Sponsor agrees to defend, indemnify, and hold Escrow Agent harmless from and against all costs, claims, expenses and damages incurred in connection with or arising out of Escrow Agent's responsibilities arising in connection with this Purchase Agreement or the performance or non-performance of Escrow Agent's duties under this Purchase Agreement, except with respect to actions or omissions taken or suffered by Escrow Agent in bad faith or in willful disregard of the obligations set forth in this Purchase Agreement or involving gross negligence of Escrow Agent. This indemnity includes, without limitation, disbursements and attorneys' fees either paid to retain attorneys or representing the hourly billing rates with respect to legal services rendered by Escrow Agent to itself.

6. Closing Contingent on Plan Being Declared Effective

The respective obligations of Purchaser and Sponsor hereunder are contingent upon the Plan being declared effective. The Plan shall not be declared effective except in accordance with the prerequisites set forth in the Plan, as same may be amended from time to time. Purchaser understands and agrees that the Sponsor shall have the right to abandon the Plan at any time prior to its being declared effective or thereafter, in certain limited cases set forth in the Plan (see the section in the Plan entitled "Effective Date" for full details). The Plan will be abandoned or deemed abandoned if it has not been declared effective within the time limits prescribed in the Plan. The Sponsor shall notify Purchaser, in writing or by a duly filed Amendment to the Plan, when the Plan becomes effective or is abandoned.

7. Closing Date and Place

The closing of title shall occur on the date and at the time and place in the State of New York as Sponsor shall designate to Purchaser on not less than thirty (30) days' prior written notice. Sponsor shall have the right, from time to time, to adjourn such date and time for closing written notice to Purchaser. If adjourned, Sponsor shall fix a new date and time for title closing and shall give Purchaser not less than ten (10) business days' prior written notice of the new scheduled date and time for closing. Purchaser may waive this thirty (30) day provision by initialing below.

I hereby waive the provision requiring thirty (30) days' notice of closing _____

8. The Deed

At closing, Sponsor shall deliver to Purchaser a Bargain and Sale Deed with covenant against grantor's acts transferring to Purchaser full ownership (fee simple title) to the Unit. The deed shall be substantially in the form reproduced as Document Number 5 in Part II of the Plan and shall be executed and acknowledged by Sponsor in form for recording. Such executed deed shall be delivered immediately to the representative of the title company insuring Purchaser's title (or, if no such representative is present, to Purchaser or Purchaser's attorney).

9. State of Title

Legal ownership to the Unit shall be transferred to Purchaser at closing subject only to the liens, encumbrances and title conditions (hereinafter called the "Permitted Encumbrances") enumerated in Exhibit A to this Agreement.

A. Any encumbrance to which title is not to be subject shall not be an objection to title if (i) the instrument required to remove it of record is delivered at or prior to the closing of title to the proper party or to Purchaser's title insurance company, together with the attendant recording or filing fee, if any, or (ii) such title insurance company as Purchaser may utilize, is or would be willing, in a fee policy issued by it to the Purchaser, to insure Purchaser that it will not be collected out of the Unit if it is a lien, or will not be enforced against the Unit if it is not a lien. The parties agree that the Sponsor may pay and discharge any liens and encumbrances upon the Property, not provided for in the Plan or this Purchase Agreement, out of the monies to be paid by the Purchaser at the time of closing title.

B. Notwithstanding anything else to the contrary in this Purchase Agreement or the Plan, if Sponsor is unable to deliver title to the Unit to Purchaser in accordance with the provisions of this Purchase Agreement and the Plan, Sponsor shall not be obligated to bring any action, suit or other proceeding or otherwise incur any cost or expense of any nature whatsoever in excess of its obligations set forth in the Plan in order to cure such inability, and, in such case, if Sponsor notifies Purchaser of its refusal to cure such inability and if Purchaser is not in default hereunder, Purchaser's sole remedy shall be either (i) to take title to the Unit subject to such inability (without any abatement in, or credit against, the Purchase Price, or any claim or right of action against Sponsor for damages or otherwise) or (ii) to terminate this Purchase Agreement. If Purchaser so elects to terminate this Purchase Agreement, Sponsor shall, within thirty (30) days after receipt of notice of termination from Purchaser, return to Purchaser all sums deposited by Purchaser hereunder (except for funds released to Sponsor to be used for special work, upgrades or extras), together with interest earned thereon, if any, and, upon the making of such payment, this Purchase Agreement shall be terminated and neither party hereto shall have any further rights, obligations or liability to or against the other under this Purchase Agreement or the Plan except for provisions hereof that by their terms survive the termination hereof. The foregoing remedy must be exercised by notice of Purchaser in writing to Sponsor within fifteen (15) days after the giving of Sponsor's notice of refusal to cure such inability, failing which it shall be conclusively deemed that Purchaser elected the remedy described in clause (i) above (i.e., to acquire title

subject to such inability).

10. Title Company Approval

Sponsor shall give, and Purchaser shall accept such title as any member of the New York Board of Title Underwriters will approve and insure, provided only the liens, encumbrances and conditions affecting title shall be the Permitted Encumbrances. Sponsor shall not be obligated to satisfy any exceptions to title raised by any other title insurance company that would be insured at no additional cost to Purchaser by Sponsor's title company. Purchasers are free to use a title company of their choosing without incurring additional costs or a penalty.

11. Sponsor's Inability to Convey Title

Sponsor may not abandon the plan after effectiveness for any reason other than a defect in title which cannot be cured without litigation or cannot be cured for less than a stated amount which shall not be less than one-half of one percent of the total offering amount.

12. Purchaser's Remedies

In the event that the Sponsor shall for any reason (except for willful default) be unable to convey and deliver the apartments in accordance with the terms of the Purchase Agreement, (except for any failure to perform any obligation imposed by applicable statute or regulation, or a failure to perform Sponsor's obligations under the Offering Plan) the sole remedy of the purchaser shall be to rescind the Purchase Agreement and be refunded the entire Down Payment with interest plus the cost of title searches, if any.

Any conflict between the Plan and the Purchase Agreement shall be resolved according to the terms of the Plan.

Nothing contained in the Purchase Agreement or in the Plan shall be construed to waive a purchaser's rights or abrogate Sponsor's obligations under Article 23-A of the GBL.

13. Closing Adjustments

A. At closing, Sponsor and Purchaser shall apportion, as of midnight of the day preceding the closing:

(i) real estate taxes (including all prepaid real estate taxes) and assessments, if any, on the basis of the fiscal or calendar year for which assessed, including water charges and sewer rents (if separately assessed) and any escrows for real estate taxes;

(ii) Common Charges for the month in which title closes; and

(iii) rent and other charges, if any, pursuant to a lease for, or tenancy of, the Unit.

(iv) insurance apportioned to unit until the policy expiration date

The "Customs in Respect of Title Closings" recommended by The Real Estate Board of New York, Inc., as amended to date, shall apply to the adjustments and other matters therein mentioned, except as otherwise provided herein.

B. In the event the Unit has not been separately assessed for the then current fiscal tax year at the time of title closing, the apportionment of real estate taxes shall be based on the Unit's pro-rata share (in proportion to its Common Interest) of the then current real estate taxes assessed against the Property. If the Unit has been separately assessed but the closing occurs before the tax rate is fixed, then the apportionment of real estate taxes shall be based upon the latest tax rate applied to the most recent assessed valuation.

C. Any errors or omissions in computing apportionments at closing shall be corrected and payment made to the proper party promptly after discovery. This provision shall survive the closing.

D. Installments for tax assessments due after the delivery of the deed, if any, shall be paid by the Purchaser without abatement, set off or credit against the Purchase Price, without recourse of any kind against the Seller and shall not be considered a defect in title.

14. Purchaser's Closing Costs

At the time of title closing, Purchaser will pay the balance of the Purchase price along with certain closing costs in addition to the legal fees of such Purchaser's counsel and the amount of any net credit in favor of Sponsor resulting from the closing apportionments described above. Such closing costs will include the following, the amounts of which are based on rates in effect on the date of the Plan and are subject to change without prior notice or amendment:

(i) If such Purchaser elects to obtain fee title insurance, he or she will pay a premium therefor to his or her title insurance company which will vary depending upon the amount of insurance requested. The premium for fee title insurance, if ordered through a title insurance company (the Purchaser is free to choose any title company), should be $773.00 for the first $100,000.00 of fee insurance plus $4.36 for each $1,000.00 or fraction thereof of additional fee insurance up to $500,000.00. The premium for mortgage title insurance should be $654.00 for the first $100,000.00 of insurance plus $3.64 for each $1,000.00 or fraction thereof of additional insurance up to $500,000.00. Sponsor's Title Company: a) has updated the title search; and b) has been retained by the Sponsor to clear any title issues affecting the premises, and c) has been retained by the Sponsor to record any documents requiring recording with respect to the offering plan. A copy of the title report will be furnished to the purchaser. In the event that Purchaser's title company refuses to accept Sponsor's undertaking in lieu of an escrow, then the Purchaser shall be required to accept title insurance from the title company procured by Sponsor provided that such title company will accept such undertaking.

(ii) A fee for recording the deed and Unit Owner's Power of Attorney of $32.00 for each instrument plus $5.00 per page, together with a service charge to the title company for such

recording of approximately $185.00;

(iii) Purchaser shall pay all governmental fees and title company service charges associated with discharging and recording a mortgage lien release and UCC-3 termination statement or other appropriate instruments discharging the unit and its contents from any mortgage lien and security interest other than the lien of any mortgage loan Purchaser obtains.

(iv) If Purchaser obtains a mortgage loan, Purchaser will pay:

(a) a fee and service charge for recording the mortgage at the same rates given above for recording the deed;

(b) mortgage recording tax in the amount provided for by law, currently 2.05% (1.8% paid by the purchaser, 0.25% paid by the Lending Bank) of the face amount of the mortgage for mortgages under $500,000.00 and 2.175% (1.925% paid by the purchaser, 0.25% paid by the Lending Bank) for mortgages over $500,000.00);

(c) Purchasers shall pay Seller an equal to all of Purchaser's savings in the mortgage recording tax to which Purchaser is entitled, whether such savings result from an assignment of an existing mortgage on the unit or is pursuant to Real Property Law 339-ee or otherwise. (Note: The Lending Bank pays an additional 0.25%);

(d) all costs and expenses in connection with such loan in amounts determined by the lender, i.e., application, points, credit report, survey, appraisal, bank's attorney's fees, Residential and Condominium Endorsements (title insurance forms required by banks) escrows (such as for common charges and real estate taxes) private mortgage insurance if any, and any other fees required by lender. Sponsor makes no representation or warranty as to such closing costs or expenses or as to the availability of such financing.

(v) Although statutorily a Seller's expense, Purchaser shall pay the Real Property Transfer Tax due to The City of New York. This tax is in the amount of 1% of the total purchase price of the Unit if the purchase price is $500,000.00 or less, 1.425% of the total purchase price if the purchase price is more than $500,000.00, and 2.625% if the Purchase is for more than one residential unit at one time. The Purchaser shall also pay for the New York State Real Estate Transfer Tax (currently $2.00 per $500.00, or fractional portion thereof of the purchase price) imposed by statute on transferors of property. For purposes of calculating the transfer taxes to be paid, consideration includes the transfer taxes paid by the Purchaser. The sample calculation of taxes in the Plan includes tax on the consideration.

(vi) Under Section 1402-a of the New York Tax Law, a "Mansion Tax", is payable by the grantee (purchaser) on each conveyance of residential real property, including condominium Units, that meet the consideration thresholds stated below. Residential real property includes a one to three family house, an individual condominium Unit, and a cooperative Unit that is or may be used, in whole or in part, as a personal residence. New York State has adopted changes to the "Mansion Tax" law pursuant to Sections 1402-a and

1402-b of the New York Tax Law imposed on Purchasers of real estate in New York City. The newly adopted rates payable by the Purchaser in New York City are per the following chart:

Purchase Price	Mansion Tax Rate
$0.00 to $999,999.99	0.00% of the Purchase Price
$1,000,000.00 to $1,999,999.99	1.00% of the Purchase Price
$2,000,000.00 to $2,999,999.99	1.25% of the Purchase Price
$3,000,000.00 to $4,999,999.99	1.50% of the Purchase Price
$5,000,000.00 to $9,999,999.99	2.25% of the Purchase Price
$10,000,000.00 to $14,999,999.99	3.25% of the Purchase Price
$15,000,000.00 to $19,999,999.99	3.50% of the Purchase Price
$20,000,000.00 to $24,999,999.99	3.75% of the Purchase Price
$25,000,000.00 and above	3.90% of the Purchase Price

(vii) Purchaser will be required to deposit with the Board of Managers two (2) months' estimated monthly common charges for his unit to be used as working capital.

(viii) Purchaser shall be obligated to pay a fee of (i) $2,500.00 to the law firm of Sponsor's attorney for services rendered in connection with recording the Declaration of Condominium and the preparation of documents (ii) $350.00 if the closing is held at any location other than Sponsor's attorney's office at the request of the Purchaser (iii) $350.00 payable to Sponsor's attorney if Purchaser applies for and closes with a mortgage; (iv) $250.00 payable to Sponsor's attorney for preparing e-forms for New York City Real Property Transfer Tax; and (v) $350.00 for each time the closing is rescheduled at the request of the Purchaser (for the costs to fix a new Closing Date and time, to coordinate the attendance of all persons, to re-date the closing documents and to recalculate the closing apportionments).

(ix)At closing, each purchaser shall pay to the Sponsor the sum of $3,500.00 to defray the Sponsor's costs of creating the condominium, e.g., architectural costs, filing fees, legal fees and other costs incurred in creating the condominium.

(x) At closing, the Sponsor will collect each purchaser's pro-rated share in the first year's insurance premium from the date of the closing until the end of the first year of condominium operation. This amount will be calculated in proportion to each purchaser's common interest and will be used to reimburse the Sponsor for payment of the first year's premium. Insurance premiums paid as part of common charges from closing until the end of the budget year will be retained by the Board to pay toward the premium for the next year. The pro-rated insurance adjustment collected by Sponsor will be in lieu of any other closing adjustments with the Board for insurance.

15. Rent Security Deposit

If Purchaser is or hereafter becomes a tenant of the Unit, Purchaser's unapplied rent

security deposit, if any, will be refunded to Purchaser, together with any interest earned thereon, within thirty (30) days following the closing, provided Purchaser is not in default under Purchaser's lease or tenancy obligations. If the Unit is occupied by other than Purchaser, then the unapplied security deposit (if any) of the tenant or occupancy will be transferred at closing to Purchaser, who will upon receipt sign and deliver to Sponsor an agreement acknowledging the amount received, indemnifying Sponsor from all liability in connection therewith and agreeing to hold such security deposit in trust and to deposit same in an interest bearing bank account pursuant to the provisions of Section 7-103 of the New York General Obligations Law (such agreement to be in form and substance satisfactory to Sponsor). In either event, Sponsor will have the right to deduct from any tenant's security deposit the amount of any rent arrearage owing to Sponsor and to sue the tenant to the extent such rent security is insufficient.

The Purchaser may not occupy the Unit or perform any work in the Unit prior to closing without the prior consent of the Sponsor. In the event the Purchaser occupies the Unit or performs any work in the Unit prior to closing without the prior consent of the Sponsor, such event shall constitute a default under Section 18 of this Agreement.

It is expressly understood and agreed that the Purchaser shall in no event take possession of the Unit prior to the time of the delivery of the deed (unless Seller agrees to give Purchaser an interim lease, which Seller is not obligated to give), and full compliance by the Purchaser with the terms of this Purchase Agreement, and should the Purchaser violate this provision, the Purchaser consents that the Sponsor shall have the right to remove him or her from the Unit as a squatter and intruder by summary proceedings. Upon the Purchaser's unauthorized possession, the Purchaser shall be deemed in default hereunder at the option of the Sponsor, and if the Sponsor so elects, the Sponsor may cancel this Purchase Agreement and the amount deposited hereunder shall belong to the Sponsor as liquidated damages deemed earned hereunder, but not more than ten percent (10%) of the purchase price, together with amounts (if any) released to Sponsor to be used for special work, upgrades or extras, shall be paid over to the Sponsor as liquidated damages. Notwithstanding the above, the Sponsor may receive the actual costs incurred for any special work, upgrades or extras ordered by Purchaser as a part of its liquidated damages even though the total amount of liquidated damages thereby exceeds ten percent (10%) of the purchase price plus interest. It is further understood and agreed that the Sponsor will not be responsible for damage or loss to any property belonging to Purchaser whether same is delivered to the Property before, on or after the closing of title herein. Sponsor may, in its discretion, grant Purchaser possession of the Unit prior to Closing under an Interim Use and Occupancy Agreement, if the Unit is currently or hereafter becomes vacant.

16. Power of Attorney to Board of Managers and Sponsor

At closing, Purchaser shall execute, acknowledge and deliver to the representative of the title insurance company insuring Purchaser's title to the Unit (or if no representative is present, then to Sponsor's attorney) for recording in the Kings County Clerk's Office, a power of attorney in favor of the Board of Managers relative to purchasing or leasing of Units and in favor of Sponsor relative to amending the Condominium Documents to the extent permitted in the power of attorney. The power of attorney shall be substantially in the form set forth in Document Number 4 in Part II of the Plan. After being recorded, the power of attorney shall be sent to the

Condominium Board.

17. Transfer Tax Return

At closing, Sponsor and Purchaser shall each duly complete and sign before a Notary Public the transfer tax return required to be filed with The State of New York. The transfer tax return shall be delivered at closing to the representative of Purchaser's title insurance company (or, if none, to Sponsor's attorney) for filing with the proper governmental officer.

18. Events of Default

A. The following shall constitute "Events of Default" hereunder:

(i) Purchaser's failure to pay the Balance on the Closing Date designated by Sponsor pursuant to paragraph 7 herein;

(ii) Purchaser's failure to duly sign, notarize and deliver at closing the power of attorney pursuant to paragraph 16 above or the New York State transfer tax return pursuant to Paragraph 17 above;

(iii)If Purchaser is or becomes a tenant of the Building, Purchaser's failure to pay rent or to otherwise comply with Purchaser's lease or tenancy obligations, which results in Purchaser's eviction from Purchaser's Unit (either by voluntary removal or by court order); or

(iv)If Purchaser occupies the unit or performs any work in the unit prior to closing without the prior consent of the Sponsor;

(v) The failure to pay, perform or observe any of the Purchaser's other obligations hereunder, which is not cured within thirty (30) days after the mailing of written notice specifying the nature of such default.

B. Upon the occurrence of an Event of Default, the Sponsor's sole remedy shall be to cancel the Purchase Agreement by sending Purchaser thirty (30) days' prior written notice of its intention to do so. If Sponsor elects to cancel, Purchaser shall have thirty (30) days from the giving of the cancellation notice within which time Purchaser must cure the specified default. If the default is not timely cured, then Sponsor shall have the right to retain, as and for liquidated damages, the Down Payment (but in no event to exceed ten percent (10%) of the Purchase Price of the unit) plus the cost of any special work in the Unit ordered by Purchaser and expended by the sponsor from the amount Purchaser delivered therefore, (hereinafter called the "Liquidated Sum") and any sums in excess thereof (together with any interest earned thereon) shall be returned to Purchaser promptly thereafter. Upon cancellation of this Agreement and making such refund to Purchaser (if any), Purchaser, Sponsor and Selling Agent will be released and discharged of all further liability and obligations hereunder and under the Plan. Thereafter, the Unit may be sold to another as though this Agreement had never been made, and without accounting to Purchaser for the

proceeds of such sale.

C. In the event that a purchaser does not close on the Closing Date set forth in the Notice of Closing, and Sponsor elects not to cancel the Purchase Agreement or if the Sponsor approves the Purchaser's request to adjourn the Purchaser's closing to his apartment, interest shall accrue on the unpaid amount of the purchase price from the Closing Date until such amount is paid. The interest rate shall be ten percent (10%) per annum calculated at a daily rate of approximately 0.0277%. This rate shall be in effect for as long as there is any unpaid amount owing towards the full purchase price.

D. Notwithstanding the occurrence of an Event of Default Sponsor may, in its sole discretion, keep this Agreement in effect and proceed to close title without prejudicing Sponsor's right to recover from Purchaser's damages, losses, costs, expenses and all other lawful sums to which Sponsor is entitled (including, but not limited to, legal fees and costs of collection).

E. If Purchaser is or becomes a tenant of the Building and Purchaser fails to pay rent or otherwise comply with Purchaser's lease or tenancy obligations, or Purchaser vacates or abandons the leased premises, then such failure, vacating or abandonment (as the case may be) shall constitute a default hereunder entitling Sponsor, at its sole option, to cancel this Agreement, even though Purchaser is not evicted from the leased premises as a result thereof. However, in the event Sponsor elects to so cancel, unless Purchaser is evicted, Sponsor shall refund to Purchaser all monies deposited hereunder together with any interest earned thereon. Upon such refund being made, Sponsor and Purchaser will be released and discharged of all further liability and obligations under this Agreement and the Plan. However, in no event shall Purchaser be released or excused from paying and performing Purchaser's lease or tenancy obligations.

19. Appliances and Equipment

A. The Unit is being sold unfurnished, without window blinds or shades and will contain only the appliances and equipment described in the Plan. Furniture, wall coverings, furnishings, decorations, and the like in or about any model Unit are for display purposes only and are not included in this sale. Any floor plans or sketches shown to Purchaser (including those contained in the Plan) are only approximations of the Unit's dimensions and arrangement, and Purchaser should not rely thereon. Sponsor shall not be liable for immaterial variations from any floor plans or sketches.

B. There will be no modifications or extras unless agreed to in writing by the parties. All modifications and alterations must be approved by Sponsor in writing and, if approved, shall be performed by Sponsor at Purchaser's expenses (payable in the manner to be set forth in an addendum to this Agreement or separate agreement).

20. Construction

A. The construction of the Building and the Unit, including the materials, equipment and fixtures to be installed therein, shall be in accordance with the Plan and the architectural

"plans and specifications" (defined in the Plan), subject to the right reserved by Sponsor to modify and amend the Plan and the "plans and specifications" in order to substitute materials, equipment or fixtures of equal or better quality and design, provided only that the approval of any governmental authorities having jurisdiction thereover and the construction lender are first obtained (if required). The issuance of a Certificate of Occupancy for the Building shall be deemed presumptive evidence that the Building and the Unit have been fully completed in accordance with the Plan and the "plans and specifications" approved by the Department of Buildings. However, nothing herein contained shall excuse Sponsor from its obligations to correct any defects in construction in accordance with the conditions set forth in the Plan in the section entitled "Rights and Obligations of the Sponsor."

B. The construction of the Building and the Unit and the correction of any defects in construction to the extent required under the Plan are the sole responsibility of the Sponsor. Purchaser acknowledges and agrees that Sponsor will not be liable for, and will have no obligation to correct, certain immaterial variations from the Plan and "plans and specifications" as indicated in the Plan in the "Rights and Obligations of Sponsor--Construction Obligations" section of the Plan, and will only be responsible to correct any construction defects to the extent, and on the terms and conditions, set forth in said section.

21. Inspection of Unit

At least ten (10) days before the Balance is to be paid, the Selling Agent shall notify the Purchaser that the Unit is ready for inspection. Upon receipt of the notice, Purchaser shall promptly arrange an appointment with the Selling Agent to inspect the Unit before the lapse of such ten (10) day period. Purchaser or his duly authorized agent shall attend such inspection and shall complete, date and sign the Inspection Statement (in the form set forth as Exhibit C to this Agreement) and deliver same to the Selling Agent at the conclusion of the inspection. Failure of Purchaser either to arrange such appointment or to inspect the Unit within ten (10) days of receipt of said notice or to so sign and deliver the completed Inspection Statement, shall not excuse Purchaser from paying the Balance when due and shall constitute Purchaser's full acceptance of the Unit. However, nothing herein shall relieve Sponsor of its obligations as set forth in the "Rights and Obligations of Sponsor -- Construction Obligations" as set forth in the offering plan.

22. Possession; Risk of Loss

A. The sponsor assumes the risk of loss from fire or other casualty until the purchaser assumes the risk of loss by taking possession of the unit. Unless Purchaser now resides in the Unit, Purchaser shall not be entitled to occupy the Unit until the deed is delivered to Purchaser at closing. Sponsor may, in its discretion, grant Purchaser possession of the Unit prior to the closing under an interim lease, if the Unit is currently, or hereafter becomes, vacant.

B. If Purchaser is given possession of the Unit prior to Closing under an interim lease or otherwise, the Purchaser shall be solely responsible for any damage to, or loss or other condition in the Unit resulting from Purchaser's use or occupancy, and Sponsor shall not

be obligated to make any repairs to the Unit or its installations as a Purchaser that takes possession of a Unit assumes the risk of loss not covered by insurance. However, until closing Sponsor will remain responsible to make those repairs required of it as a landlord under any existing or interim lease and, after closing, the Condominium Board will be responsible to make those repairs required of it under the Condominium Documents.

C. If during Purchaser's occupancy the Unit is damaged by casualty or otherwise, the Purchaser shall assume the risk of loss and the obligation to repair the damage, unless the cause thereof originated outside the Unit and did not result from the acts of Purchaser or other occupants of the Unit or Purchaser's guests, invitees or workmen. If Purchaser is obligated to repair the damage, then Purchaser's failure to make such repair shall not excuse Purchaser from paying the Balance and accepting delivery of the deed. Purchasers should note that a Purchaser that takes possession prior to closing assumes the risk of losses not covered by insurance.

D. Except as provided in the preceding subparagraph C, all other risk of loss prior to closing has been assumed by Sponsor, but without any obligation or liability of Sponsor to repair the damage or restore the Unit. If Sponsor or (in the event the Declaration is filed) the Unit Owners elect to repair or replace the loss or damage, this agreement shall continue in full force and effect, Purchaser shall not have the right to reject title to the Unit or to receive a credit against, or abatement in, the Purchase Price, and Sponsor shall be entitled to a reasonable period of time to complete or to permit the Condominium Board to complete such repairs or replacements. Purchaser shall not be required to pay the Balance unless and until (i) the Unit has been repaired to as near as reasonably possible to its condition immediately prior to the casualty and (ii) its essential services (such as gas, electricity, and heat) and a reasonable means of ingress and egress to the street have been restored. Any proceeds received from insurance or in satisfaction of any claim or action in connection with such loss, shall belong entirely to Sponsor (subject to the rights, if any, of the Condominium Board or other Unit Owners) and if such proceeds are paid to Purchaser, Purchaser shall promptly upon receipt turn them over to Sponsor. The provisions of the preceding sentence shall survive the closing.

E. In the event Sponsor notifies Purchaser that it does not elect to repair or restore the Unit or if the Unit Owners do not resolve to make such repairs or restoration pursuant to the Condominium's By-Laws, this Agreement shall be deemed cancelled and of no further force or effect and Sponsor shall return to Purchaser all sums deposited hereunder, without interest (unless interest is earned), whereupon the parties shall be released and discharged from all obligations and liability hereunder and under the Plan, except that if Purchaser is then in default hereunder (beyond the applicable grace period, if any), Sponsor shall retain the Liquidated Sum pursuant to Paragraph 19 above. The Sponsor will notify the Purchaser within fifteen (15) days of its decision with respect to repairing the unit.

23. <u>No Representation</u>

Purchaser acknowledges that Purchaser has not relied upon any architect's plans, sales plans, selling brochures, advertisements, representations, warranties, statements or estimates of

any nature whatsoever, whether written or oral, made by Sponsor, Selling Agent or others, including, but not limited to, any relating to the description or physical condition of the Property, the Building or the Unit, or the size or the dimensions of the Unit or the rooms therein contained or any other physical characteristics thereof, the services to be provided to Unit Owners or the estimated Common Charges and estimated real estate taxes for the Unit, the right to any income tax deduction for any real estate taxes or mortgage interest paid by Purchaser, or any other data, except as may be specifically represented herein or in the Plan; Purchaser having relied on Purchaser's own examination and investigation thereof. No person has been authorized to make any representations on behalf of Sponsor. No oral representations or statements shall be considered a part of this Agreement. Purchaser agrees (a) to purchase the Unit, without offset or any claim against, or liability of, Sponsor, whether or not any layout or dimension of the Unit or any part thereof, or of the Common Elements, as shown on the Floor Plans, is accurate or correct, provided the layouts and dimensions conform to such Floor Plans and (b) that Purchaser shall not be relieved of any of Purchaser's obligations hereunder by reason of any immaterial inaccuracy or error. The provisions of this Paragraph 23 shall survive the closing of title.

24. Notices

All notices, elections, consents, demands and communications (collectively called "notices" or individually called "notice") shall be delivered personally or given in writing by registered or certified mail, return receipt requested, postage prepaid, and, if sent to Purchaser, addressed to Purchaser at Purchaser's address given in the preamble to this Agreement and, if sent to Sponsor, addressed to the Sponsor.

Notice to Purchaser shall include facsimile transmission to Purchaser or Purchaser's attorney. Seller's attorney may send all notices to Purchaser's attorney and/or Purchaser via facsimile at the following number(s):

_____.

A facsimile confirmation printout by Seller's attorney showing transmission was complete is sufficient evidence that the facsimile has been transmitted and the notice has been served.

25. Broker

Purchaser represents to Sponsor that _____ and _____ is/are the only broker(s) or sales agent(s) with whom Purchaser has dealt in connection with this transaction. Sponsor agrees to pay the commission due the aforementioned selling agent(s) pursuant to separate agreement. Purchaser agrees that should any claim be made against Sponsor for commissions by any broker, other than the aforementioned selling agent(s), on account of any acts of Purchaser or of Purchaser's representatives, Purchaser will indemnify and hold Sponsor free and harmless from any and all liabilities and expenses in connection therewith, including (without limitation) reasonable legal fees and disbursements. The provisions of this Paragraph 25 shall survive the closing.

26. No Lien; Agreement Subject to Mortgage

A. No lien or encumbrance shall arise against the Property or the Unit as a result of this Agreement or any monies deposited hereunder. This Agreement shall not be recorded and any purported recordation hereof by Purchaser shall constitute an Event of Default.

B. In furtherance and not in limitation of the provisions of the preceding subparagraph A, Purchaser agrees that the provisions of this Agreement are and shall be subject and subordinate to the lien of any mortgages heretofore or hereafter made and any payments or expenses already made or incurred or which hereafter may be made or incurred, pursuant to the terms thereof, or incidental thereto, or to protect the security thereof, to the full extent without the execution of any further legal documents by Purchaser. Sponsor shall, at its option, either satisfy such mortgages or obtain a release of the Unit and its undivided interest in the Common Elements from the lien of such mortgages on or prior to the Closing Date unless Purchaser assumes such mortgages. The existence of any mortgage or mortgages encumbering the Property, or portions thereof, other than the Unit and its undivided interest in the Common Elements, shall not constitute an objection to title or excuse Purchaser from completing payment of the Purchase Price or performing all of Purchaser's other obligations hereunder or be the basis of any claim against, or liability of, Sponsor, provided that any such mortgage is subordinated to the Declaration and the Unit is released from the lien of such mortgage at closing.

27. Entire Agreement

This Purchase Agreement, together with the Plan, as the Plan may be amended from time to time, constitutes the entire agreement between the parties as to the subject matter hereof and supersedes all prior understandings and agreements.

28. Joint Purchasers

The term "Purchaser" shall be read as "Purchasers" if more than one person are purchasers, in which case their obligations shall be joint and several.

29. Liability of Sponsor

A. Sponsor shall be excused from performing any obligation or undertaking provided for in this Agreement for so long as such performance is prevented, delayed or hindered by an act of G-d, fire, flood, explosion, war, riot, sabotage, inability to procure or general shortage of energy, labor, equipment, facilities, materials, or supplies in the open market, failure of transportation, strike, lock-out, action of labor unions or any other cause (whether similar or dissimilar to the foregoing) not within the reasonable control of Sponsor. Sponsor's time to perform such obligation or undertaking shall be tolled for the length of the period during which such performance was excused.

B. Notwithstanding the forgoing, disclaimers or limitations of liability on the part of the Sponsor or its principals for failure to perform any obligation imposed by applicable statute or regulation may not be included. The plan may not include any financial limitation on

Sponsor's liability for failure to perform its obligations under the offering plan.

30. Further Assurances

Either party shall execute, acknowledge and deliver to the other party such instruments and take such other actions, in addition to the instruments and actions specifically provided for herein, as such other party may reasonably request in order to effectuate the provisions of this Agreement or of any transaction contemplated herein or to confirm or perfect any right to be created or transferred hereunder or pursuant to any such transaction.

31. Severability

If any provision of this Agreement or the Plan is invalid or unenforceable as against person or under certain circumstances, the remainder of this Agreement or the Plan and the applicability of such provision to other persons or circumstances shall not be affected thereby. Each provision of this Agreement or the Plan, except as otherwise herein or therein provided, shall be valid and enforced to the fullest extent permitted by law.

32. Strict Compliance

Any failure by Sponsor to insist upon strict performance by Purchaser of any of the provisions of this Agreement shall not be deemed a waiver of any of the provisions hereof, irrespective of the number of violations or breaches which may occur, and Sponsor, notwithstanding any failure, shall have the right thereafter to insist upon strict performance by Purchaser of any and all of the provisions of this Agreement to be performed by Purchaser.

33. Governing Law

The provisions of this Agreement shall be governed by, and construed and enforced in accordance with, the Laws of the State of New York.

34. Gender

A reference in this Agreement to any one gender, masculine, feminine or neuter, includes the other two, and the singular includes the plural, and vice versa, unless the context otherwise requires.

35. Certain References

The term "herein", "hereof" or "hereunder" or similar terms used in this Agreement refer to this entire Agreement and not to the particular provision in which the term is used. Unless otherwise stated, all references herein to Paragraphs, subparagraphs or other provisions are references to Paragraph, subparagraphs or other provisions of this Agreement.

36. Captions

The captions in this Agreement are for convenience and reference only and in no way

define, limit or describe the scope of this Agreement or the intent of any provisions hereof.

37. Successors and Assigns

The provisions of this Agreement shall bind and inure to the benefit of Purchaser and Purchaser's heirs, legal representatives, successors and permitted assigns and shall bind and inure to the benefit of Sponsor and its successors and assigns.

38. No Oral Changes

This Agreement cannot be changed, nor any provision waived orally. ANY CHANGES OR ADDITIONAL PROVISIONS OR WAIVERS MUST BE SET FORTH IN A RIDER ATTACHED HERETO OR IN A SEPARATE WRITTEN AGREEMENT SIGNED BY THE PARTIES.

39. Acceptance of Purchase Agreement

A. On or prior to Purchaser's signing and delivering this Purchase Agreement, Purchaser agrees (if requested) to complete, sign and deliver to the Selling Agent an application form furnished by Sponsor. Such application shall be used to determine Purchaser's qualification to purchase and own the Unit but does not constitute a reservation or binding obligation on either the applicant or Sponsor.

B. The submission of such application or this Purchase Agreement to Purchaser does not constitute a binding obligation on either Purchaser or Sponsor. No such binding obligation shall arise until duplicates of this Purchase Agreement are executed by, and delivered to, both Purchaser and Sponsor (or Sponsor's duly authorized agent). If, within twenty (20) days after the Selling Agent receives this Purchase Agreement signed by Purchaser, a duplicate of this Agreement signed by Sponsor or its authorized agent is not sent or delivered to Purchaser, then it shall be deemed rejected and of no force or effect, and all monies paid by Purchaser shall be promptly refunded, without interest. Upon such refund being made, neither party shall have any further rights, obligations or liabilities hereunder with respect to the other. Sponsor has the right, without incurring any liability, to reject this Agreement without cause or explanation to Purchaser. This Agreement may not be rejected due to Purchaser's sex, sexual orientation, race, creed, color, national origin, ancestry, disability, marital status or other ground proscribed by law.

40. Purchase Agreement Not Conditioned on Financing.

Purchaser may partially finance the purchase of this unit by obtaining a mortgage loan for the purchase price. However, the obligations of purchaser under this Purchase Agreement are not conditional on the purchaser's obtaining financing unless Sponsor agrees to condition the contract upon financing and both Sponsor and Purchaser execute the Financing Contingency Rider.

41. Building Smoking Policy

By signing this Agreement, Purchaser represents that he/she is informed that Smoking, which includes carrying, burning, or otherwise handling or controlling any lit or smoldering product containing tobacco or cloves, including but not limited to cigarettes, cigars, pipes or electronic cigarettes, shall be permitted only inside a Unit or in an outdoor Limited Common Element that is connected to a Unit. Smoking anywhere else in the Condominium shall be prohibited, including, but not limited to, in indoor and outdoor Common Elements. Purchaser agrees that Purchaser shall not smoke, or permit smoking by any occupant, agent, tenant, invitee, guest, friend, or family member anywhere on the property except in Purchaser's Unit or in any outdoor Limited Common Element that is connected to the Unit. Purchaser is aware that Smoking in violation of this rule shall constitute a nuisance pursuant to the terms and provisions of the By-Laws and shall be subject to a fine as reasonably determined by the Condominium Board.

42. Lead Based Paint

By signing below, I affirm that I have read this Agreement and fully understand the terms. I also understand that the Lead Paint Rider attached hereto as Exhibit E is to be executed by the undersigned.

43. Agreement Not Assignable; Binding Effect

This Purchase Agreement is not assignable without the consent of the Sponsor.

This Purchase Agreement shall bind and apply to Purchaser and Purchaser's executors, administrators, legal representatives, heirs, successors and permitted assigns.

IN WITNESS WHEREOF, the parties have executed this Agreement as of the date first above written.

Purchaser:

_____L.S.

_____L.S.

Purchaser's Address:

_____

Accepted and Agreed to:

By: _____

Date Accepted:

_____

Receipt of the Down Payment is acknowledged and the undersigned agrees to act in accordance with the provisions of paragraph 5 above.

_____

The Law Office of Jay Lichtman P.C., Escrow Agent

EXHIBIT A: PERMITTED ENCUMBRANCES

Title to each Residential Unit and its Common Interest will be conveyed at the closing of title to such Residential Unit free and clear of all liens, encumbrances, and title exceptions other than those described in the proposed Unit Deed and the title exceptions and other matters set forth below (collectively the "Permitted Encumbrances"):

1. Building restrictions and zoning laws and other regulations, resolutions and ordinances and any amendments thereto now or hereafter adopted by any governmental or quasi-governmental authority having jurisdiction.

2. Title exceptions may include the state of facts shown on a stated survey and any additional state of facts a subsequent survey would show, provided that such additional state of facts does not render title unmarketable.

3. Zoning regulations, ordinances, building restrictions and regulations;

4. Consents by Sponsor or any former owner of the Property for the erection of any structure or structures on, under or above any street or streets that the Property may abut;

5. Encroachments of the Building, walls, stoops, steps, balconies, ornamental columns, windows, door caps, keystones, ledges, pilasters, coping, trim and cornices, and any other part thereof, if any, upon any street or highway or upon any adjoining property and similar encroachments upon the Property;

6. Sewer, water, electric, plumbing, heating, gas, telephone and other utility easements and consents, if any, then or thereafter recorded, including the right to maintain and operate lines, wires, cables, amplifiers, transformers, pipes, conduits, poles, meters and distribution boxes in, over, under and upon the Property and the Building;

7. The lien of any mortgage, lien or other encumbrance granted, created, or obtained by the Purchaser;

8. Easements for ingress and egress for construction, installation, operation and maintenance of municipal service facilities and utilities. Any easement or right of use in favor of handicapped persons or any easement or right of use in favor of any utility company for electricity, steam, gas, telephone, water, or other service, and the right to construct, use, maintain, repair, and replace all utility lines, wires, terminal boxes, mains, pipes, cables, conduits, poles, connections and other equipment and facilities on, under and across the Land and Building.

9. Any Party walls and party wall agreements;

10. Any other covenants, restrictions, easements, or any other encumbrance (other than for the payment of money), provided that they do not prohibit the existence and use of such Residential Unit;

11. Revocability of licenses for vault space, if any, under the sidewalks and streets and the lien of any unpaid vault tax (which is to be paid by the Condominium Board);

12. The lien of any Common Charges and Special Assessments, real estate taxes, water frontage and/or meter charges, sewer rents, vault charges and assessments, provided that apportionment of such items is made as provided in the Section of the Plan entitled "Unit Closing Costs and Adjustments";

13. Leases and service, maintenance, employment, concessionaire and license agreements, if any, of other Units or portions of the Common Elements. Service, labor, concessionaire and maintenance agreements contemplated under the Plan;

14. Any Interim Lease with the Purchaser for such Residential Unit and any other leases, tenancies and occupancies permitted by the Purchase Option Agreement for such Residential Unit;

15. Any lien, notice of pendency or other encumbrance either (i) for which the instrument required to remove said lien, notice of pendency or other encumbrance of record is delivered at or prior to the date of closing of title to the Residential Unit, together with the required recording or filing fee, to the proper party or to the Purchaser's title insurance company, or (ii) as to which the Purchaser's title insurance company will insure that the lien, notice of pendency or other encumbrance will not be collected out of or enforced against the Residential Unit;

16. The lien of any assessment or assessments that are or may become payable in annual installments of which any installment is then a charge or a lien, provided that apportionment thereof is made as provided in the Section of the Plan entitled "Unit Closing Costs and Adjustments";

17. Judgments, bankruptcies or other returns against other persons having names the same as or similar to that of Sponsor or any of its principals, provided Sponsor or any such principals, as the case may be, deliver to the Purchaser or the Purchaser's title insurance company an affidavit showing that such judgments, bankruptcies or other returns are not against Sponsor or any such principals, as the case may be;

18. Uniform Commercial Code financing statements or conditional bills of sale, provided that (i) such statements were filed on a date more than five years prior to the closing of title to the Unit, (ii) Sponsor executes and delivers to the Condominium an affidavit setting forth that the property covered thereby is no longer in the Residential Unit or is fully paid for, or (iii) a tenant is the debtor thereunder;

19. Sidewalk violations and any other violations against the Property that are the obligation of any Board or another Unit Owner to correct.

20. All of the terms, burdens, easements, covenants, restrictions, conditions and rules and regulations set forth in the Declaration, the By-Laws (and the Rules and Regulations made thereunder), the Residential Unit Owner's Power of Attorney and the Floor Plans, all as may be amended from time to time; and

21. The standard exceptions contained in the form of fee title insurance policy then issued by the title insurance company insuring Purchaser's title to the Residential Unit.

22. Any encumbrance as to which the title insurance company which insures Purchaser's title to the Unit would be willing, in a fee policy issued by it to Purchaser, to insure Purchaser that such encumbrance (a) will not be collected out of the Unit if it is a lien and (b) will not prevent the use of the Unit for dwelling purposes.

23. Any lease covering the Unit.

24. Certificate of Occupancy to be issued covering the unit if required.

25. Any violations against the Property (other than the Unit) which are the obligation of the Condominium Board or another Unit Owner to correct.

26. Encroachments of shrubbery, stoops, areas, steps, doors, ledges, window sills, trim, copings, retaining walls, bay windows, balconies, sidewalk elevators, fences, fire escapes, cornices, foundations, footings, chutes, fuel oil lines, drainage and stand pipes, sewerage pipes, air-conditioning units, canopies, ramps, and similar projections, if any, on, over, or under the Property or the streets or sidewalks or property abutting the Property and the rights of governmental authorities and adjoining property owners to require the removal of any such projections and variations between record lines of the Property and retaining walls and the like, if any.

Sponsor will not be obligated to bring any action or proceeding or otherwise incur any cost or expense in excess of its obligations under the Plan to cure any inability to deliver title to a Residential Unit in accordance with the Plan and the terms of the Purchase Agreement for such Residential Unit. If Sponsor notifies a Purchaser of its refusal to cure any such inability, then such Purchaser's sole remedy will be either (a) to take such title as Sponsor is able to deliver without abatement in or credit against the Purchase Price for the Residential Unit and without any claim or right of action against Sponsor for damages or otherwise or (b) to terminate his Purchase Option Agreement and receive a refund of his Down Payment and any interest earned thereon. A Purchaser must notify Sponsor in writing as to which option such Purchaser elects within ten (10) days after the giving of Sponsor's notice of refusal to cure such inability, with **TIME BEING OF THE ESSENCE**. If a Purchaser fails to timely deliver such notice, it will be conclusively deemed that such Purchaser has elected to acquire title to the Unit subject to such inability as set forth in clause (a).

EXHIBIT B: TERMS OF FINANCING CONTINGENCY RIDER

THE TERMS SET FORTH IN THIS FINANCING CONTINGENCY RIDER SHALL APPLY, AT SELLER'S SOLE OPTION, ONLY IF AGREED TO BY THE SPONSOR IN THE SPACE PROVIDED BELOW. PURCHASER'S SIGNATURE ALONE DOES NOT EFFECTUATE THIS FINANCING CONTINGENCY RIDER.

THIS RIDER IS ANNEXED TO AND FORMS A PART OF THE PURCHASE AGREEMENT, DATED _____, 20___ BETWEEN 1296 Park Place PH LLC , SELLER, AND _____, PURCHASER, RELATIVE TO THE SALE OF UNIT _____ AT THE 1296 PARK PLACE CONDOMINIUM, 1296 PARK PLACE, BROOKLYN, NEW YORK.

As used in the Financing Contingency Rider, the following terms as hereinafter referred to, shall be defined as follows:

A. Contract Date: the date Purchaser's attorney receives a fully executed Purchase Agreement.

B. Institutional Lender: any bank, savings bank, private banker, trust company, savings and loan association, credit union or similar banking institution whether organized under the laws of this state, the United States or any other state, foreign banking corporation licensed by the Superintendent of Banks of New York or regulated by the Comptroller of the Currency to transact business in New York State; insurance company duly organized or licensed to do business in New York State; mortgage banker licensed pursuant to Article 12 D of the Banking Law; and any instrumentality created by the United States or any state with the power to make mortgage loans.

C. Lender: either of Sponsor's Preferred Mortgagees or Purchaser's Preferred Lender.

D. Financing Contingency Expiration Date: forty-five (45) days from the Contract Date.

E. Purchaser's Preferred Lender: any Institutional Lender that is not either of Sponsor's Preferred Mortgagees.

F. Sponsor's Preferred Mortgagees: shall mean Shimon Rosenberg, Mortgage Consultant, Wells Fargo Home Mortgage | 150 E 42nd St New York, NY 10017, Tel 212-214-6711 | Cell 718-564-9068 | Fax 866-943-1195, Email: Shimon.M.Rosenberg@wellsfargo.com.

The following are the terms of the Rider:

1. The obligations of Purchaser hereunder are conditioned upon issuance on a date which is on or before the Financing Contingency Expiration Date, of a written commitment from any Lender pursuant to which such Lender agrees to make a first mortgage loan to Purchaser, at Purchaser's sole cost and expense, of an amount equal to 75% of the purchase price or such lesser sum as Purchaser shall be willing to accept, at prevailing interest rates for a term of at

least thirty (30) years and on other customary commitment terms, whether or not conditional upon any factors other than an appraisal satisfactory to the Lender.

2. Within two (2) weeks of the Contract Date, Purchaser must make a mortgage application to a Lender. Within seven (7) days thereafter, the Purchaser must provide the Seller and/or Seller's attorney with the name and address of the Lender to which the application has been made. Failure to send such notice will be considered to be a waiver of the financing contingency. Purchaser shall authorize the Lender to talk directly to Seller's attorney regarding the status of the mortgage application. Purchaser shall (a) furnish accurate and complete information regarding Purchaser and members of Purchaser's family, as required, (b) pay all fees, points and charges required in connection with such application and loan, including (but not limited to) appraisal and origination fees (if any), (c) pursue such application with diligence, and (d) cooperate in good faith with such Lender to obtain such commitment. Purchaser shall comply with all requirements of such commitment (or of any other commitment accepted by Purchaser) and shall furnish Seller with a copy thereof promptly after receipt thereof.

3. If Purchaser only applies to Purchaser's Preferred Lender and a commitment is not issued or a rejection is received, Purchaser shall within five (5) days of the Financing Contingency Expiration Date or rejection date, notify the Seller of the failure to receive a commitment or of the rejection. At such time, the Seller may, at its option, within fifteen (15) days of receiving notice from Purchaser, cause the Purchaser to submit an application together with the required fees to said Preferred Mortgagee, and Purchaser shall be required to accept the commitment if issued by Sponsor's Preferred Mortgagee under the same terms and conditions as stated above. Purchaser shall have forty-five (45) days from the date Seller caused the Purchaser to submit an application together with the required fees to said Preferred Mortgagee (the "2nd Financing Contingency Expiration Date") to obtain a mortgage commitment from said Preferred Mortgagee. If such Preferred Mortgagee issues a commitment, the terms of such commitment being substantially similar to the terms originally sought by the Purchaser, Purchaser must close, either, with said financing commitment, with another financing commitment Purchaser receives from another Lender, or without financing, or risk losing the Downpayment. Purchaser is required to pay all applicable fees in connection with the mortgage application with the Preferred Mortgagees. If Seller fails to cause Purchaser to make such application to Sponsor's Preferred Mortgagee within fifteen (15) days of receiving notice from Purchaser of the failure to receive a commitment or of the rejection, or if the Preferred Mortgagee failed to provide a commitment by the 2nd Financing Contingency Expiration Date, or denied the Purchaser's mortgage application, Purchaser may cancel this contract by giving notice to Seller within five (5) days of Financing Contingency Expiration Date or the 2nd Financing Contingency Expiration Date (as applicable), in which case this contract shall be deemed cancelled and thereafter neither party shall have any further rights against, or obligations or liabilities to, the other by reason of this contract and the Down Payment shall be promptly refunded to Purchaser.

4. If Purchaser applied to Purchaser's Preferred Lender *and* one of Sponsor's Preferred Mortgagees and fails to receive a commitment or receives a rejection from Purchaser's Preferred Lender but received a commitment at prevailing rates from Sponsor's Preferred Mortgagee, Purchaser must close with Sponsor's Preferred Mortgagee. If Purchaser applied to

Purchaser's Preferred Lender *and* one of Sponsor's Preferred Mortgagees and either a commitment is not issued or a rejection is received from both, Purchaser shall within five (5) days of the Financing Contingency Expiration Date or rejection date, notify the Seller of the failure to receive a commitment or of the rejection, in which case this contract shall be deemed cancelled and thereafter neither party shall have any further rights against, or obligations or liabilities to, the other by reason of this contract and the Down Payment shall be promptly refunded to Purchaser.

5. If Purchaser fails to give notice of cancellation, then Purchaser shall be deemed to have waived Purchaser's right to cancel this contract and to receive a refund of the Down Payment by reason of the contingency contained in this Rider and the financing contingency will no longer apply. In addition, if Purchaser fails to notify Seller within fifty (50) days of the Contract Date that he has received a commitment, Seller may at its option cancel the contract and thereafter neither party shall have any further rights against or obligations or liabilities to, the other by reason of this contract, and upon cancellation the Down Payment shall be promptly refunded to Purchaser.

Provided that the Sponsor consents to permit a financing contingency in accordance with the above terms and the purchaser complies with all of such terms, if the financing commitment lapses or expires prior to closing and Purchaser has made a good faith effort to extend the commitment, the Sponsor will grant Purchaser a right of rescission and ten (10) days after expiration to exercise such right. If Sponsor does grant Purchaser a financing contingency, and a mortgage commitment is not fulfilled through no fault of the Purchaser, under New York law performance is excused. If Purchaser acts in good faith and lender *revokes* the commitment after the contingency period expires, performance is excused.

Purchaser should note that even if a mortgage commitment is secured, said mortgage commitment may expire or change prior to the actual closing. Any risks related to the expiration or change to the mortgage commitment shall be borne by the Purchaser, if Purchaser is at fault.

In accordance with this Rider, Purchaser will have the right to terminate the Purchase Agreement and be refunded all monies deposited thereunder, without interest, in the event:

(i) a Lender fails, through no fault of the Purchaser, to issue its commitment on the terms described above by the Financing Contingency Expiration Date or the 2nd Financing Contingency Expiration Date (as applicable), or such greater period as the Sponsor may permit in Sponsor's sole discretion, provided the Purchaser gives notice of termination not later than five (5) days after the expiration of the aforementioned dates; or

(ii) the commitment issued by the Lender is not funded by the closing through no fault of the Purchaser, provided the Purchaser gives notice of termination no later than ten (10) days before the closing, provided the lender has given Purchaser more than ten (10) days' notice.

In the event Purchaser fails to exercise the right of termination within time periods set forth above or has failed to satisfy the conditions set forth in the Financing Contingency Rider, then, in either case, the Purchase Agreement shall remain in full force and effect.

SELLER:

By: _____

PURCHASER:

_____

_____

EXHIBIT C: INSPECTION STATEMENT

_____, 20___

1296 Park Place PH LLC

Re: The 1296 Park Place Condominium
1296 Park Place, Brooklyn, NY
Unit No. ___

Ladies and Gentlemen,

As a result of my/our final inspection on this date, please be advised that, except as otherwise noted on the attached sheet, I/we found the Unit in good condition:

I/we understand that to avoid the risk of pilferage, certain items such as medicine cabinet doors, shower heads, toilet seats, kitchen cabinets, vanity knobs, mechanical chimes, plumbing fittings, light fixtures, electrical receptacles, toilet room accessories, door hardware and _____, may be installed just prior to my/our date of moving. I/we agree and I/we will sign off on each item requiring adjustment or repairs, if any, as it is completed.

I/We agree that I/we will promptly initial each item set forth on the attached inspection sheet as it is completed to acknowledge completion. My/Our failure to respond to you within five (5) business days of your written request for such acknowledgment shall be deemed to mean that I/we have accepted and acknowledged the work as complete. I/We understand that work indicated on the inspection sheet shall be performed in accordance with the practice of the industry. In the event of a dispute, Sponsor's contractor, architect or engineer shall determine whether or not such work was performed according to such standard and his or her decision shall be binding on the parties hereto.

You agree to complete all items listed on this inspection statement within a reasonable period of time following closing to my/our Unit, subject to delays for work or materials beyond your control.

This Inspection Statement shall survive closing of title to my/our Unit.

_____
Purchaser's Signature[1]

_____
Purchaser's Signature

1296 Park Place PH LLC

By: _____
Sponsor's Representative

[1] If one purporting to be the Purchaser's agent signs to acknowledge completion, the Sponsor shall be entitled to rely on such signature as acknowledgment of completion and Purchaser shall be bound thereby.

EXCEPTION SHEET
AND CERTIFICATE OF COMPLETION, ADJUSTMENT AND/OR REPAIRS

Re: 1296 Park Place, Brooklyn, New York
Purchaser: _____
Unit No.: _____
Date: _____
Time: _____

1	
2	
3	
4	
5	
6	
7	
8	
9	
10	
11	
12	

_____
Sponsor's Representative Purchaser's Representative

100% Sign off on All Items: _____ Date: _____

_____
Sponsor's Representative Purchaser's Representative

ADJUSTMENTS AND/OR REPAIRS

Signature	Item Number	Dates Completed

EXHIBIT D: SPONSOR'S LIMITED WARRANTY

THIS LIMITED WARRANTY HAS BEEN FORMED IN ACCORDANCE WITH ARTICLE 36-B OF THE GENERAL BUSINESS LAW, OTHERWISE KNOWN AS THE HOUSING MERCHANT IMPLIED WARRANTY.

EFFECTIVE DATE OF THIS LIMITED WARRANTY

The effective date of this limited warranty is the earlier of the (i) date that purchaser shall first take possession of the Unit or (ii) the date of delivery of the condominium unit deed to the purchaser.

SPONSOR'S LIMIT ON MAXIMUM LIABILITY

The Sponsor's maximum liability to purchaser under this limited warranty is limited to fifty percent (50%) of the purchase price of the unit set forth in the purchase agreement to which this limited warranty is annexed as Exhibit D.

THIS LIMITED WARRANTY REPLACES ALL OTHER WARRANTIES ON THE CONSTRUCTION AND SALE OF THE UNIT AND ALL COMPONENTS THEREOF, BOTH EXPRESS AND IMPLIED (INCLUDING BUT NOT LIMITED TO, ANY IMPLIED WARRANTIES OF MERCHANTABILITY OR FITNESS FOR A PARTICULAR PURPOSE). THE PURPOSE OF THIS LIMITATION IS TO IDENTIFY THE SELLER'S RESPONSIBILITIES FOR LATENT CONSTRUCTION DEFECTS THAT COULD NOT HAVE DISCOVERED OR DISCLOSED BY AN INSPECTION OF THE UNIT.

THIS LIMITED WARRANTY EXCLUDES ANY CONSEQUENTIAL, INCIDENTAL, SPECIAL AND INDIRECT DAMAGES.

1. THOSE COVERED UNDER THIS LIMITED WARRANTY

This Limited Warranty extends to the purchaser named on page 1 of this purchase agreement and its successors whom acquire title to the Unit by will or intestacy. This Limited Warranty does not extend to subsequent owners, possessors, lessees, mortgagees in possession of the Unit or any person(s) or entity(ies) who may succeed to the rights of the herein purchaser.

2. LIMITED WARRANTY IS GIVEN BY SPONSOR

This Limited Warranty is made solely by the Sponsor of this condominium, whose name appears on page 1 of this purchase agreement.

3. PURCHASER'S OBLIGATION TO INSPECT THE UNIT

Purchaser assumes and undertakes the responsibility to inspect the Unit prior to acquisition of title and prior to occupancy. Any defects discovered upon inspection or which may be

discovered by an inspection of the Unit shall be reported to the Sponsor prior to closing of title or will be deemed waived indefinitely.

4. COVERAGE

The Warranty period for all of the following coverages begins on the effective date of this Warranty set forth herein above.

(i) For one (1) year, the home must be free from defects caused by workmanship or materials that do not meet the standards of the applicable building code; for items not covered by code, the construction must be in accordance with locally accepted building practices.

(ii) For two (2) years, the plumbing, electrical, heating, cooling and ventilation systems must be free from defects caused by unskillful installation.

(iii) For six (6) years, the home must be free from physical defects in the structural elements (foundation, floors, walls, roof framing).

Not Covered by the Housing Merchant Implied Warranty:

(i) A defect not caused by defective workmanship, materials or design.

(ii) Defects in items sold with the home, such as stoves, refrigerators, air conditioners, etc. There are implied warranties from the manufacturers of such goods which are described in other laws.

5. EXCLUSIONS FROM COVERAGE

(a) The Sponsor's total and maximum liability to any unit owner under the Sponsor's Limited Warranty is limited to fifty percent (50%) of the purchase price of the unit.

(b) The Sponsor's Limited Warranty excludes all consequential, incidental, special damages and indirect damages.

(c) The Sponsor's Limited Warranty does not cover defects in appliances, fixtures, equipment and household items, except defects due to improper installation by the Sponsor.

(d) The Sponsor's Limited Warranty does not cover any defects for any labor or in any work or materials ordered directly by any purchaser from Sponsor's sub-contractors, suppliers, or any independent contractor not engaged in any non-delegable duty(ies).

(e) The Sponsor's Limited Warranty is limited to actual purchasers and their successors whom acquire title to the subject Unit by will or by the governing intestacy laws.

(f) In addition, the following items are not covered by the Sponsor's Limited Warranty:

(i) conspicuous defects and any defects which an inspection of the Unit would reveal;

(ii) damage caused by the failure of the purchaser or any affiliate thereof, to comply with the requirements of the Sponsor's Limited Warranty or of any requirements imposed by a manufacturer, supplier of appliances, fixtures, equipment or household items;

(iii)damage caused by the misuse, overuse, or interference by purchaser or anyone other than the Sponsor or its employees or delegates;

(iv)any additional damage caused by the failure of purchaser to give adequate notice to the Sponsor of any defects or damage in a timely fashion as provided in the Sponsor's Limited Warranty;

(v) any damage caused by changes, alterations or improvements made to the Unit by anyone other than the Sponsor or its employees or delegates;

(vi)any damage caused by purchaser's failure to adequately maintain and preserve any item or property covered under the Sponsor's Limited Warranty;

(vii) any loss or damage caused by or stemming from an accident, catastrophe, unnatural forces due to violence or gross negligence, fire, explosion, smoke, motor vehicles, acts of God, lightening, windstorm, hail, flood, earthquake, soil movement, and changes in the underground waterbase;

(viii) any loss or damage caused by seepage of water unless such loss or damage is directly related to a construction defect resulting from construction by the Sponsor;

(ix)any damage resulting from purchaser's failure to take timely action to mitigate any pre-existing damages;

(x) any condition resulting from normal wear and tear or form normal settling of the building, including but not limited to, concrete cracks, outer building cracks which do not impair the structural stability of the building;

(xi)insects, vermin, rodent damage and infestation, or damage caused by other animals or pests;

(xii) death, bodily injury or damage to personal property;

(xiii) damage which arises from any misuse or unauthorized use of the Unit.

6. NOTICE

Purchasers must give notice of defects in their home in writing no later than thirty (30) days after the end of the warranty period.

7. SPONSOR'S OBLIGATIONS IN THE EVENT OF A DEFECT COVERED UNDER THIS WARRANTY

If a defect occurs in an item covered under this warranty, the Sponsor will make a good faith effort to repair, replace or pay the purchaser the reasonable cost of repairing or replacing the defective item(s) within ninety (90) days after Sponsor's inspection of the alleged defect which discloses an actual defect covered under this limited warranty. The Sponsor reserves the sole right and discretion to replace, repair or furnish payment for any defect.

The Sponsor's maximum liability under this warranty is limited to fifty percent (50%) of the purchase price of the Unit as set forth in the purchase agreement to which this exhibit is annexed.

Repair of any damage to the load bearing portions of the Unit or Building will be limited to that which is necessary to restore their load bearing functions.

COMPLETION AND DELIVERY OF NOTICE OF WARRANTY CLAIMS WITHIN THIRTY (30) DAYS AFTER THE EXPIRATION OF THE APPLICABLE WARRANTY PERIOD IS NECESSARY TO PROTECT THE RIGHTS OF THE PURCHASER UNDER THIS LIMITED WARRANTY. ALL TIME PERIODS FOR SAID COVERAGES ARE OF THE ESSENCE AND WILL NOT BE EXTENDED BY THE SPONSOR.

SELLER:

By: _____

_____
Purchaser

_____
Purchaser

EXHIBIT E: LEAD-BASED PAINT RIDER

The U.S. Environmental Protection Agency ("EPA") and the Department of Housing and Urban Development have promulgated Federal regulations under 24 CFR Part 35 and 40 CFR Part 745 ("Regulations") pursuant to the Residential Lead-Based Paint Hazard Reduction Act of 1992 regarding the disclosure of lead-based paint and/or lead-based paint hazards to prospective purchasers of Unsold Units. In accordance with the provisions of the Regulations, there is attached to this Rider a "Lead Warning Statement" and "Disclosure of Information on Lead-Based Paint and/or Lead-Based Paint Hazards" to be signed by Seller, Purchaser and Agent, as applicable, simultaneously with the Purchase Agreement to which this Rider is attached. The Regulations do not require any testing or removal of lead-based paint by sellers.

This Agreement is contingent upon a risk assessment or inspection of the Property ("Inspection") for the presence of lead-based paint and/or lead-based paint hazards at the Purchaser's expense. Intact lead-based paint that is in good condition is not necessarily a hazard. Such Inspection shall be performed within ten (10) calendar days after a countersigned Purchase Agreement has been returned to Purchaser or Purchaser's attorney on the following terms and conditions:

Purchaser and Purchaser's consultant, if any ("Consultant"), will be given reasonable access to the Unit and the public areas of the Buildings.

The Inspection shall be held at a mutually convenient time and date.

The Inspection shall be performed in a reasonable manner so as not to disturb or interfere with the use, operation, security or occupancy of the Unit or the Buildings.

Purchaser hereby indemnifies and holds Seller harmless from and agrees to be liable for any damages to the Unit or the Buildings, injuries and all claims and lawsuits caused by the Purchaser or the Consultant during or from the Inspection.

Purchaser or the Consultant will not probe, penetrate or disturb any painted or covered surface during the Inspection without Seller's prior approval.

This Inspection contingency will terminate at the end of such ten-day period without further notification by Seller unless the Purchaser (or Purchaser's agent) delivers to Seller or Seller's agent a proposed Purchase Agreement Addendum listing the specific existing deficiencies and corrections needed, together with a copy of the inspection and/or risk assessment report (the "Report). The Seller may, at the Seller's sole option, within five (5) business days after delivery of the Addendum and Report, elect in writing whether to correct the condition(s) prior to Closing. If the Seller will correct the condition, the Seller shall furnish the Purchaser with a certification from the Consultant or from the Seller's risk assessor or inspector, confirming that the condition has been remedied before the Closing date, as such date may be extended or adjourned, as provided in the Purchase Agreement. If the Seller does not elect to make the repairs or if, within three (3) days, Seller does not make a counter-offer to remove this contingency and sell the Unit in "as is"

condition, then this Purchase Agreement shall become void and the Contract Deposit will be refunded to Purchaser. The Purchaser may remove this contingency at any time without cause.

PURCHASER AGREES THAT IT IS PURCHASING THE UNIT "AS IS" WITHOUT ANY PREPRESENTATIONS OR WARRANTIES WHATSOEVER AS TO THE CONDITION OF THE UNIT AND THE BUILDINGS, EXCEPT AS MAY BE OTHERWISE PROVIDED IN THE PLAN. PURCHASER FURTHER AGREES THAT SELLER HAS NO RESPONSIBILITY OR LIABLITY FOR, AND PURCHASER HEREBY UNCONDITIONALLY RELEASES SELLER FROM, ANY AND ALL LIABILITY, BOTH KNOWN AND UNKNOWN, PRESENT AND FUTURE, THAT IS BASED UPON OR RELATED TO, THE EXISTENCE OF LEAD OR LEAD-BASED PAINT OR OTHER SOURCES OF LEAD ON OR ABOUT THE UNIT AND THE BUILDINGS.

_____

, Purchaser

_____

, Purchaser

SELLER:

By: _____
Name:
Title:

DOCUMENT NUMBER 3

NEW YORK STATE AND NEW YORK CITY TAX FORMS

New York State
Real Estate Transfer Tax Return
Credit Line Mortgage Certificate (TP-584)

and

New York Department of Finance
Real Property Transfer Tax Return (RPT)

DOCUMENT NUMBER 4

UNIT OWNER'S POWER OF ATTORNEY

The Law Office of Jay Lichtman, P.C.
68 Jay Street, Suite 420
Brooklyn, New York 11201

NYC Finance

NYC-RPT

Form and Instructions

What's inside?

Form NYC-RPT (Real Property Transfer Tax Return). Pages 1 - 11

Smoke Detector Affidavit for one-and two-family dwellings. Page 12

Instructions for Form NYC-RPT. Pages 13 - 17

What is the Tax Rate? Page 14

Who is exempt from the transfer tax? Page 16

What is the filing fee? Page 16

Where and when do I have to file? Page 17

Use this application only if filing a Property Transfer Tax Return for Staten Island. All other boroughs must file via ACRIS at nyc.gov/finance

New York City Department of Finance

Revised 04.06.2015

NEW YORK CITY DEPARTMENT OF FINANCE

NYC - RPT
Finance

REAL PROPERTY TRANSFER TAX RETURN

(Pursuant to Title 11, Chapter 21, NYC Administrative Code)

Instructions: If you are filing this form as part of a Non-Recorded Transfer, mail your completed RPT form to: **NYC Dept. of Finance, Non-Recorded RPTT Return Processing, 66 John Street, 13th Floor, New York, NY 10038.** See Instructions on page 17 of this form for further details.

▲ DO NOT WRITE IN THIS SPACE ▲
FOR OFFICE USE ONLY

GRANTOR

● Name

● Grantor is a(n): (check one) ☐ individual ☐ partnership (see instructions) ☐ corporation ☐ single member LLC ☐ multiple member LLC (see instructions) ☐ other_____

Telephone Number

● Permanent mailing address after transfer (number and street)

● City and State

Zip Code

● Single member's name if grantor is a single member LLC (see instructions)

SOCIAL SECURITY NUMBER

OR

EMPLOYER IDENTIFICATION NUMBER

SINGLE MEMBER EIN OR SSN

GRANTEE

● Name

● Grantee is a(n): (check one) ☐ individual ☐ partnership (see instructions) ☐ corporation ☐ single member LLC ☐ multiple member LLC (see instructions) ☐ other_____

Telephone Number

● Permanent mailing address after transfer (number and street)

● City and State

Zip Code

● Single member's name if grantee is a single member LLC (see instructions)

SOCIAL SECURITY NUMBER

OR

EMPLOYER IDENTIFICATION NUMBER

SINGLE MEMBER EIN OR SSN

PROPERTY LOCATION

LIST EACH LOT SEPARATELY. ATTACH A RIDER IF ADDITIONAL SPACE IS REQUIRED

● Address (number and street)	Apt. No.	Borough	Block	Lot	# of Floors	Square Feet	● Assessed Value of Property

● DATE OF TRANSFER TO GRANTEE: _____ ● PERCENTAGE OF INTEREST TRANSFERRED: _____%

CONDITION OF TRANSFER. See Instructions

● Check (✓) all of the conditions that apply and fill out the appropriate schedules on pages 5-11 of this return. Additionally, Schedules1 and 2 **must** be completed for all transfers.

a. ☐.....Arms length transfer
b. ☐.....Transfer in exercise of option to purchase
c. ☐.....Transfer from cooperative sponsor to cooperative corporation
d. ☐.....Transfer by referee or receiver (complete Schedule A, page 5)
e. ☐.....Transfer pursuant to marital settlement agreement or divorce decree (complete Schedule I, page 9)
f. ☐.....Deed in lieu of foreclosure (complete Schedule C, page 6)
g. ☐.....Transfer pursuant to liquidation of an entity (complete Schedule D, page 6)
h. ☐.....Transfer from principal to agent, dummy, strawman or conduit or vice-versa (complete Schedule E, page 7)
i. ☐.....Transfer pursuant to trust agreement or will (attach a copy of trust agreement or will)
j. ☐.....Gift transfer not subject to indebtedness
k. ☐.....Gift transfer subject to indebtedness
l. ☐.....Transfer to a business entity in exchange for an interest in the business entity (complete Schedule F, page 7)
m. ☐.....Transfer to a governmental body
n. ☐.....Correction deed
o. ☐.....Transfer by or to a tax exempt organization (complete Schedule G, page 8).
p. ☐.....Transfer of property partly within and partly without NYC
q. ☐.....Transfer of successful bid pursuant to foreclosure
r. ☐.....Transfer by borrower solely as security for a debt or a transfer by lender solely to return such security
s. ☐.....Transfer wholly or partly exempt as a mere change of identity or form of ownership. Complete Schedule M, page 9)
t. ☐.....Transfer to a REIT or to a corporation or partnership controlled by a REIT. (Complete Schedule R, pages 10 and 11)
u. ☐.....Other transfer in connection with financing (describe): _____
v. ☐.....A grant or assignment of a leasehold interest in a tax-free NY area
w. ☐.....Other (describe): _____

● TYPE OF PROPERTY (✓)

a. ☐ ..... 1-3 family house
b. ☐ ..... Individual residential condominium unit
c. ☐ ..... Individual cooperative apartment
d. ☐ ..... Commercial condominium unit
e. ☐ ..... Commercial cooperative
f. ☐ ..... Apartment building
g. ☐ ..... Office building
h. ☐ ..... Industrial building
i. ☐ ..... Utility
j. ☐ ..... OTHER. (describe): _____

● TYPE OF INTEREST (✓)

Check box at LEFT if you intend to record a document related to this transfer. Check box at RIGHT if you do not intend to record a document related to this transfer.

	REC.		NON REC.
a.	☐	Fee	☐
b.	☐	Leasehold Grant	☐
c.	☐	Leasehold Assignment or Surrender	☐
d.	☐	Easement	☐
e.	☐	Subterranean Rights	☐
f.	☐	Development Rights	☐
g.	☐	Stock	☐
h.	☐	Partnership Interest	☐
i.	☐	OTHER. (describe): _____	☐

SCHEDULE 1 - DETAILS OF CONSIDERATION

COMPLETE THIS SCHEDULE FOR ALL TRANSFERS AFTER COMPLETING THE APPROPRIATE SCHEDULES ON PAGES 5 THROUGH 11. ENTER "ZERO" ON LINE 11 IF THE TRANSFER REPORTED WAS WITHOUT CONSIDERATION.

1. Cash	1.		
2. Purchase money mortgage	2.		
3. Unpaid principal of pre-existing mortgage(s)	3.		
4. Accrued interest on pre-existing mortgage(s)	4.		
5. Accrued real estate taxes	5.		
6. Amounts of other liens on property	6.		
7. Value of shares of stock or of partnership interest received	7.		
8. Value of real or personal property received in exchange	8.		
9. Amount of Real Property Transfer Tax and/or other taxes or expenses of the grantor which are paid by the grantee	9.		
10. Other (describe): _____	10.		
11. **TOTAL CONSIDERATION** (add lines 1 through 10 - must equal amount entered on line 1 of Schedule 2) (see instructions)	11.	$	

See instructions for special rules relating to transfers of cooperative units, liquidations, marital settlements and transfers of property to a business entity in return for an interest in the entity.

SCHEDULE 2 - COMPUTATION OF TAX

A. **Payment**	Pay amount shown on line 12 - *See Instructions*	Payment Enclosed	

1. Total Consideration (from line 11, above)	1.		
2. Excludable liens (see instructions)	2.		
3. Consideration (Line 1 less line 2)	3.		
4. Tax Rate (see instructions)	4.		%
5. Percentage change in beneficial ownership (see instructions)	5.		%
6. Taxable consideration (multiply line 3 by line 5)	6.		
7. Tax (multiply line 6 by line 4)	7.		
8. Credit (see instructions)	8.		
9. Tax due (line 7 less line 8) (if the result is negative, enter zero)	9.		
10. Interest (see instructions)	10.		
11. Penalty (see instructions)	11.		
12. **Total Tax Due** (add lines 9, 10 and 11)	12.	$	

SCHEDULE 3 - TRANSFERS INVOLVING MULTIPLE GRANTORS AND/OR GRANTEES

NOTE If additional space is needed, attach copies of this schedule or an addendum listing all of the information required below.

GRANTOR(S)

- Name
- Grantor is a(n): (check one) ☐ individual ☐ partnership (see instructions) ☐ corporation ☐ single member LLC ☐ multiple member LLC (see instructions) ☐ other_____
- Telephone Number
- Permanent mailing address after transfer (number and street)
- City and State
- Zip Code
- Single member's name if grantor is a single member LLC (see instructions)

SOCIAL SECURITY NUMBER

OR

EMPLOYER IDENTIFICATION NUMBER

SINGLE MEMBER EIN OR SSN

- Name
- Grantor is a(n): (check one) ☐ individual ☐ partnership (see instructions) ☐ corporation ☐ single member LLC ☐ multiple member LLC (see instructions) ☐ other_____
- Telephone Number
- Permanent mailing address after transfer (number and street)
- City and State
- Zip Code
- Single member's name if grantor is a single member LLC (see instructions)

SOCIAL SECURITY NUMBER

OR

EMPLOYER IDENTIFICATION NUMBER

SINGLE MEMBER EIN OR SSN

GRANTEE(S)

- Name
- Grantee is a(n): (check one) ☐ individual ☐ partnership (see instructions) ☐ corporation ☐ single member LLC ☐ multiple member LLC (see instructions) ☐ other_____
- Telephone Number
- Permanent mailing address after transfer (number and street)
- City and State
- Zip Code
- Single member's name if grantee is a single member LLC (see instructions)

SOCIAL SECURITY NUMBER

OR

EMPLOYER IDENTIFICATION NUMBER

SINGLE MEMBER EIN OR SSN

- Name
- Grantee is a(n): (check one) ☐ individual ☐ partnership (see instructions) ☐ corporation ☐ single member LLC ☐ multiple member LLC (see instructions) ☐ other_____
- Telephone Number
- Permanent mailing address after transfer (number and street)
- City and State
- Zip Code
- Single member's name if grantee is a single member LLC (see instructions)

SOCIAL SECURITY NUMBER

OR

EMPLOYER IDENTIFICATION NUMBER

SINGLE MEMBER EIN OR SSN

GRANTOR'S ATTORNEY

Name of Attorney			Telephone Number ( )
Address (number and street)	City and State		Zip Code
EMPLOYER IDENTIFICATION NUMBER	-	OR	SOCIAL SECURITY NUMBER - -

GRANTEE'S ATTORNEY

Name of Attorney			Telephone Number ( )
Address (number and street)	City and State		Zip Code
EMPLOYER IDENTIFICATION NUMBER	-	OR	SOCIAL SECURITY NUMBER - -

CERTIFICATION

I swear or affirm that this return, including any accompanying schedules, affidavits and attachments, has been examined by me and is, to the best of my knowledge, a true and complete return made in good faith, pursuant to Title 11, Chapter 21 of the Administrative Code and the regulations issued thereunder.

GRANTOR

Sworn to and subscribed to

before me on this _____ day

of _____, _____.

EMPLOYER IDENTIFICATION NUMBER OR SOCIAL SECURITY NUMBER

Name of Grantor

Signature of Notary

Signature of Grantor

Notary's stamp or seal

GRANTEE

Sworn to and subscribed to

before me on this _____ day

of _____, _____.

EMPLOYER IDENTIFICATION NUMBER OR SOCIAL SECURITY NUMBER

Name of Grantee

Signature of Notary

Signature of Grantee

Notary's stamp or seal

GRANTEE: To ensure that your property and water/sewer tax bills are sent to the proper address, please visit the Finance website at nyc.gov/finance. If you do not have internet access, call 311.

SCHEDULE A - TRANSFER BY REFEREE OR RECEIVER

NOTE The consideration for a transfer by a referee or receiver under foreclosure or execution is the amount bid for the property or economic interest therein and the costs paid by the purchaser, plus the amount of any pre-existing mortgages, liens or other encumbrances remaining on the property after the transfer, whether or not the underlying indebtedness is assumed.

1. Was this transfer the result of a court ordered sale pursuant to foreclosure or execution? (✓) ..... ☐ YES ☐ NO
   If "YES," complete lines 2a through 2f below. If "NO," complete line 3 below.

2a. Status of grantee: (✓)
☐ Nominee of plaintiff ☐ Plaintiff in foreclosure action ☐ Assignee of plaintiff ☐ Transferee of successful bidder
☐ Other (describe): _____

2b. Priority of mortgage foreclosed upon: ☐ first ☐ second ☐ third or other

2c. Amount of foreclosure judgment .....2c. $ _____

2d. Price bid by grantee (enter here and on Schedule 1. See instructions) .....2d. $ _____

2e. Costs paid by grantee (enter here and on line 10, Schedule 1).....2e. $ _____

2f. Amount of remaining mortgages, liens or other encumbrances (enter here and on Schedule 1. See instructions) .....2f. $ _____

3. If the answer to line 1 above is "NO", state the reason for this transfer: _____

SCHEDULE B - TRANSFER OF SHARES OF STOCK IN A COOPERATIVE HOUSING CORPORATION

A. Name and address of cooperative housing corporation: _____

_____ Zip Code: _____

B. 1) Is this an initial transfer of shares from either a cooperative housing corporation or a sponsor? (✓) ☐ YES ☐ NO

2) If "YES," enter the date the NYC Real Property Transfer Tax was paid on the transfer of land and/or building to the cooperative housing corporation ..... MONTH ____ DAY ____ YEAR ____

If this initial transfer is more than 2 years from the above date, enter the date the first of these initial transfers was made ..... MONTH ____ DAY ____ YEAR ____

C. Is this a transfer of an individual unit in a housing company organized and operating pursuant to the provisions of articles two, four, five, or eleven of the Private Housing Finance Law? (✓) ☐ YES ☐ NO

If "YES," you are not subject to the Real Property Transfer Tax. However, you must file a return.

NOTE If you answered "YES," to question B above, you may be entitled to a credit. Complete lines 1 through 4 below. If you answered "NO," to question B above, you are not entitled to a credit.

CREDIT CALCULATION

1. Enter the amount of NYC Real Property Transfer Tax paid on conveyance of underlying real property to cooperative housing corporation .....1. $ _____
2. Enter the number of shares transferred in this transaction .....2. _____
3. Enter the total number of outstanding shares of the cooperative housing corporation including any shares held by the corporation .....3. _____
4. Amount of credit (divide line 2 by line 3 and multiply the result by line 1. Enter here and on line 8, Schedule 2) .....4. $ _____

SCHEDULE C - TRANSFER IN LIEU OF FORECLOSURE

NOTE A conveyance by a defaulting mortgagor to the mortgagee (or to a nominee or assignee of the mortgagee) in consideration of the cancellation of the mortgage debt is taxable. The consideration is the amount of the outstanding mortgage debt and unpaid accrued interest, plus the amount of any other mortgages, liens or encumbrances remaining on the property or economic interest or the underlying real property after the transfer, whether or not the underlying indebtedness is assumed and irrespective of whether the cancellation of the mortgage was recorded.

1. Status of grantee: (✓)

☐ Mortgagee ☐ Nominee of mortgagee ☐ Assignee of mortgagee

☐ Other (describe):_____

2. Priority of mortgage in default: ☐ first ☐ second ☐ third or other

3. Amount of debt owed by grantor to mortgagee at time of transfer:
   a. Outstanding principal (enter here and on line 3 of Schedule 1) .....3a. $
   b. Accrued interest (enter here and on line 4 of Schedule 1) .....3b. $
4. Amount of mortgages, liens or other encumbrances remaining on the real property or economic interest therein after the transfer (enter here and on Schedule 1. See instructions).....4. $

SCHEDULE D - TRANSFER PURSUANT TO PARTIAL OR COMPLETE LIQUIDATION OF CORPORATION, PARTNERSHIP OR OTHER ENTITY

SEE INSTRUCTIONS AND SCHEDULE M.

NOTE A distribution of real property or an economic interest therein within 12 months of liquidation of the distributing entity is presumed to be a distribution in liquidation. *Attach a balance sheet reflecting the grantor's assets and liabilities at the time of the liquidation.*

COMPUTATION OF TAX BASE

1. Fair market value of real property or economic interest therein at the time of liquidation.....1. $
2. Amount of mortgages or other liens or encumbrances on real property or economic interest therein.....2. $
3. Tax base: Compare line 1 and line 2, enter the greater of the two here and on line 11, Schedule 1 .....3. $

IF, PURSUANT TO THE INSTRUCTIONS, YOU ARE FILING MORE THAN ONE SCHEDULE D, IDENTIFY THE PROPERTY THAT THIS SCHEDULE D REFERS TO.

BOROUGH	BLOCK	LOT	ADDRESS	FAIR MARKET VALUE

SCHEDULE E - TRANSFER BY OR TO AN AGENT, DUMMY, STRAWMAN OR CONDUIT

NOTE A transfer from an agent, dummy, strawman or conduit to a principal or from a principal to an agent, dummy, strawman or conduit is exempt from the Real Property Transfer Tax. Complete questions 1 through 8 below to establish the claim of exemption.

1. Name and address of party from whom the property or economic interest was acquired by grantor.

   Name: _____

   Address: _____
   NUMBER AND STREET CITY STATE ZIP CODE

2. Date of acquisition: ☐ ☐ ☐
3. Is this conveyance either a transfer from an agent to a principal or from a principal to an agent? (✓) ..... ☐ YES ☐ NO
   If "YES," attach a copy of agency agreement or affidavit of explanation.
4. Amount of Real Property Transfer Tax paid upon acquisition by grantor..... ☐ ☐
5. Is this transfer part of a transfer to and from a corporation for the sole purpose of acquiring mortgage financing? (✓). ☐ YES ☐ NO
6. Is this transfer to a dummy, strawman, or conduit from a principal or vice versa? (✓) ..... ☐ YES ☐ NO
7. If this is a transfer to an agent, dummy, strawman, or conduit, is the grantee actively engaged in a business? (✓)..... ☐ YES ☐ NO
8. If the answers to questions 3, 5, 6 and 7 above are all "NO," describe the relationship of the grantor and the grantee and the purpose of the transfer:

   _____

   _____

   _____

   _____

SCHEDULE F - TRANSFER TO BUSINESS ENTITY IN RETURN FOR AN INTEREST IN THE BUSINESS ENTITY

SEE SCHEDULE M AND INSTRUCTIONS.

NOTE A transfer of property or an economic interest therein to a corporation in exchange for shares of its capital stock may be taxable, even where there is no simultaneous exchange of shares of stock for the real property or economic interest therein, if the transfer is part of a plan to form a corporation for the purpose of holding the property or economic interest therein. A transfer to a partnership as a contribution of partnership assets may be similarly taxable.

1. Relationship of grantee to grantor(s) immediately after the transfer: (✓)

   ☐ Corporation wholly owned by grantor(s) ☐ Partnership consisting wholly of grantor(s)

   ☐ Corporation owned by grantor(s) and other(s) ☐ Partnership consisting of grantor(s) and other(s)

   ☐ Other (describe):_____

2. If this transfer has more than one grantor, state the percentage of interest transferred by each grantor. (If the grantor is a partnership or limited partnership, state the percentage of interest transferred by each individual partner or limited partner.)

Name of Grantor/Partnership	Percentage of interest
	%
	%
	%

3. Date of formation of grantee business	3.	
4. Fair market value of the real property or economic interest therein at time of transfer	4.	$
5. Basis used for depreciation of the real property on federal tax return by the grantor before this transfer	5.	
6. Basis to be used for depreciation of the real property on federal tax return by the grantee after this transfer	6.	
7. Amount of mortgages, liens or encumbrances on the real property transferred	7.	$
8. Other consideration received from the business entity (attach schedule).....	8.	$
9. Value of shares of stock or partnership interest received in exchange for the real property or interest therein (line 4 less the sum of lines 7 and 8) (enter here and on line 7, Schedule 1)	9.	$

SCHEDULE G - TRANSFER BY OR TO A TAX EXEMPT ORGANIZATION

NONPROFIT ORGANIZATIONS PLEASE REFER TO THE INSTRUCTIONS "EXEMPTIONS FROM THE TRANSFER TAX"

NOTE A transfer by or to an eligible tax exempt organization is exempt from the Real Property Transfer Tax. To be eligible, an organization must be operated exclusively for religious, charitable or educational purposes and must provide proof of the organization's tax exempt status. If claiming tax exempt status, please answer questions 1 and 2. Additionally, the organization must provide copies of any letters granting an IRS or New York State sales tax exemption or New York City exemption and ATTACH AN AFFIDAVIT stating whether such an exemption remains in effect.

1. Is the grantor or grantee an organization exempt from taxation pursuant to IRS Code Section 501(c)(3)? (✓) ..... ☐ YES ☐ NO
   If "YES", attach a copy of of the letter from the U. S. Treasury Department granting the exemption.
2. Has the grantor or grantee received an exemption from sales tax from the NYS Department of Taxation and Finance? (✓) .. ☐ YES ☐ NO
   If "YES", attach a copy of the letter from the NYS Department of Taxation and Finance granting the exemption.

SCHEDULE H - TRANSFER OF CONTROLLING ECONOMIC INTEREST

A. Indicate name, address and Employer Identification Number (EIN) of entity with respect to which a controlling economic interest has been transferred:

Name : _____

Address: _____
NUMBER AND STREET CITY STATE ZIP CODE

Employer Identification Number: ☐ - ☐

NOTE If the real property that is the subject of this transfer is owned by an entity other than the entity listed above, check (✓) the box and attach a schedule listing the name, address and Employer Identification Number of the entity. ..... ☐

B. Total percentage of economic interest transferred in this transaction	B.	%
C. Total percentage of economic interest transferred by this grantor(s) or others in related transfers or pursuant to plan (including this transaction)	C.	%
D. Total percentage of economic interest transferred by this grantor(s) or others within the preceding three years (including this transaction)	D.	%
E. Total percentage of economic interest acquired by this grantee(s) or others in related transfers or pursuant to plan (including this transaction)	E.	%
F. Total percentage of economic interest acquired by this grantee(s) or others within the preceding three years (including this transaction)	F.	%

NOTE If any of the above percentages is 50% or more, complete lines 1 and 2 below and Schedules 1 and 2. Attach a rider explaining apportionment of consideration.

COMPUTATION OF CONSIDERATION

1. Total consideration for this transfer	1.	$
2. Amount apportioned to item of NYC real property or interest therein (see instructions)	2.	$

SCHEDULE I - TRANSFERS PURSUANT TO A SEPARATION AGREEMENT, MARITAL SETTLEMENT AGREEMENT OR DIVORCE DECREE

NOTE The consideration for a transfer pursuant to a separation agreement, marital settlement agreement or divorce decree includes the value of any marital rights exchanged for the property or economic interest as well as any other types of consideration paid by the grantee for the transfer. The consideration **will be presumed to be equal to the fair market value of the portion of the property or interest transferred,** unless you establish the consideration to be a different amount.

1. What was the fair market value of property at the time of transfer? ..... $ _____

2. Is the property a 1, 2 or 3 family house, residential condominium or residential cooperative apartment? .. ☐ YES ☐ NO

   If yes, was there a mortgage on the property at the time of transfer? ..... ☐ YES ☐ NO

   If yes, what was the balance due? (Enter also on Schedule 2, line 2) ..... $ _____

3. What was the Grantor's percentage of ownership at the time of the transfer? ..... _____%
   If the transfer was between husband and wife jointly as Grantor and either husband or wife individually as Grantee it is presumed that the percentage of ownership transferred will be 50% unless the deed specifies another percentage.

4. ***Rebuttable Presumption of Fair Market Value:*** if the marital settlement agreement, separation agreement or divorce decree specifies a value for the portion of the property or interest transferred that is different from fair market value, enter that value here. You may choose to submit relevant portions of your separation agreement, marital settlement agreement or divorce decree, or any other information in support of the value attributed to the transferred property if you have evidence that the consideration was other than fair market value ..... $ _____

PLEASE LIST AND ATTACH ANY ADDITIONAL INFORMATION SUBMITTED

SCHEDULE M - MERE CHANGE OF FORM TRANSFERS

For transfers occurring on or after June 9, 1994, a transfer that represents a mere change in identity or form of ownership or organization is not taxable to the extent the beneficial ownership of the real property or economic interest therein remains the same. *(See instructions)* ATTACH COPIES OF ALL RELEVANT DOCUMENTS.

- For each person or entity who, prior to the transaction being reported on this Schedule M, owned a beneficial interest in the property or economic interest therein transferred, report above the percentage of beneficial interest in that real property or economic interest therein owned by that owner before and after the transfer, and describe the relationship of each beneficial owner to the grantor and grantee. Attach additional pages, if necessary.
- If, for any owner, the amount reported in column D is less than the amount reported in column E, enter zero in column F.

A 1. NAME OF BENEFICIAL OWNER	B RELATIONSHIP TO GRANTOR	C RELATIONSHIP TO GRANTEE	D PERCENTAGE INTEREST BEFORE	E PERCENTAGE INTEREST AFTER	F CHANGE *D minus E*
			%	%	
2. TOTAL CHANGE *(total of column F) Enter here and on Schedule 2, line 5.*					

(attach rider if necessary)

SCHEDULE R - REAL ESTATE INVESTMENT TRUST TRANSFERS

Real Estate Investment Trust Transfers ("REIT Transfers") are taxed at one-half of the otherwise applicable rate. (NYC Administrative Code Section 11-2102(e)) **Attach a copy of the prospectus to Form NYC-RPT and write "REIT Transfer" on the top of the first page of Form NYC-RPT.** If you are filing Form NYC-RPT reporting a REIT Transfer that qualifies as a mere change in identity or form of ownership or organization, you must also complete Schedule M.

General Information

REIT TRANSFER

A REIT Transfer is any deed or other instrument or transaction conveying or transferring real property or an economic interest in real property to a Real Estate Investment Trust as defined in Section 856 of the Internal Revenue Code (a 'REIT"), or to a partnership or corporation in which a REIT owns a controlling interest immediately following the transaction and any issuance or transfer of an interest in a REIT or in such a partnership or corporation in connection with such a transaction, provided either:

1. the transaction occurs on or after June 9, 1994 in connection with the initial formation of the REIT and conditions 1(a), 2 and 3 below are met, or

2. the transaction occurs on or after July 13, 1996 and before September 1, 2002 (or after August 30, 2002 if the transfer is made pursuant to a binding written contract entered into before September 1, 2002, with a REIT or a partnership or corporation in which the REIT owns a controlling interest, and the date of execution of that contract is confirmed by independent evidence satisfactory to the Department), and conditions 1 (b) and 2 below are met.

For a definition of "controlling interest", see General Information for Form NYC-RPT, "Imposition of Tax."

CONDITIONS

1a. The value of the ownership interests in the REIT or in the partnership or corporation controlled by the REIT received by the grantor as consideration for the transaction must be equal to 40 percent or more of the excess of the value of the total consideration received over the amount of mortgages and other liens and encumbrances on the property or on the grantor's economic interest in the property, other than mortgages and other liens and encumbrances created in contemplation of the formation of the REIT.

b. This condition is the same as Condition 1(a), except that the value of the ownership interests received as consideration must be equal to at least 50 percent rather than 40 percent of the excess of the total consideration received over mortgages and other liens and encumbrances on the property or economic interest transferred excluding mortgages and other liens or encumbrances created in contemplation of the transaction reported on this Schedule R.

Use the worksheet on the following page of this Schedule to make this determination.

2. The interests in the REIT or in the partnership or corporation controlled by the REIT may not be transferred by the grantor or owners of the grantor within two years following the date of the transaction other than transfers within the two-year period resulting from the death of an individual grantor or owner of a grantor.

3. At least 75 percent of the cash proceeds of the initial public offering of REIT shares must be used for the following:

   a. payments on loans secured by an interest in the real property or an economic interest therein owned directly or indirectly by the REIT, or payments into reserves therefor;

   b. capital improvements to real property owned directly or indirectly by the REIT, or payments into reserves therefor;

   c. brokerage fees and commissions, professional fees and payments to or on behalf of a tenant as an inducement to enter into a lease or sublease of real property owned directly or indirectly by the REIT, or payments into reserves therefor; or

   d. payments to acquire real property or an economic interest therein other than an acquisition that would qualify as a REIT Transfer without regard to this condition 3.

If condition 2 or 3, where applicable, ceases to be met after this Schedule R is filed, an amended Form NYC-RPT must be filed and any additional tax due must be paid.

WORKSHEET FOR CONDITIONS 1(a) and 1(b)

1. Add lines 1, 2, 7, 8, 9 and 10 from Form NYC-RPT, Schedule 1 and enter total here ..... **1.** $ _____

2 a. Enter total number of REIT shares received ..... **a.** _____

b. Enter maximum number of REIT shares into which ownership interests may be converted ..... **b.** _____

c. Add lines a and b ..... **c.** _____

d. Enter offering price per share of REIT shares on the date of the transaction reported ..... **d.** _____

e. Multiply line 2c by line 2d ..... **e.** _____

f. Enter value of ownership interests received not convertible into REIT shares ..... **f.** _____

g. Add lines e and f ..... **2g.** _____

3. Multiply line 1 by .40 for condition 1(a) or .50 for condition 1(b) ..... **3.** _____

- If line 3 is greater than line 2g, the transaction does not qualify as a REIT transfer. DO NOT FILE THIS SCHEDULE. You must file Form NYC-RPT and compute your tax due on Schedule 2.
- If line 3 is less than or equal to line 2g, the transaction will qualify as a REIT Transfer, provided the other conditions are met. You should complete Form NYC-RPT substituting on line 4 of Schedule 2:
  - **.5%** instead of 1%;
  - **.7125%** instead of 1.425%;
  - **1.3125%** instead of 2.625%

SEE INSTRUCTIONS TO DETERMINE WHICH TAX RATE APPLIES

Instructions for Completing Worksheet

LINE 1

Where the value of the underlying property transferred or interest therein is used in determining the consideration for a REIT Transfer, you may, but are not required to, report as the value of the real property or interest therein (Form NYC-RPT, Schedule 1, line 7), the estimated market value as determined by the Department of Finance as reflected on the most recent Notice of Assessment issued by the Department. *(See Statements of Audit Procedure 93-2-GCT/RPTT, 3/1/93 and 95-1-GCT/RPTT, 7/28/95)* Add to the amount reported on line 1 the amount of any mortgages and other liens and encumbrances created in contemplation of the formation of the REIT in the case of condition 1(a) or in contemplation of the transaction reported on this Schedule R in the case of condition 1(b).

LINE 2

If the grantor received REIT shares as consideration for the transfer, enter on line 2a the number of REIT shares received. If the grantor received interests in a partnership or corporation controlled by the REIT that may be converted into REIT shares, enter on line 2b the maximum number of REIT shares into which such interests may be converted and attach an explanation of the terms of the conversion. If the grantor received interests that may be converted into REIT shares but you believe that the offering price for the REIT shares into which such interests may be converted is not a proper measurement of the value of the interests received, do not complete line 2b. Instead, attach an explanation of the terms of the conversion and enter on line 2f the fair market value of the interests received. If the grantor received interests in a partnership or corporation controlled by the REIT that cannot be converted into REIT shares at any time, enter on line 2f the fair market value of the interests received. If you enter an amount on line 2f, attach an explanation of the method used for determining the value of the interests received.

Certification

I swear or affirm under penalties of perjury that the grantor has no present intention to transfer or convey the REIT shares or interests in a partnership or corporation controlled by the REIT received by the grantor as consideration in the transaction reported on this Schedule R within two years of the date of the transfer, other than a distribution of such shares or interests to the partners or shareholders of the grantor, and that, to the best of my knowledge, condition 3 above regarding the use of the cash proceeds of the REIT offering will be satisfied, if applicable. I further swear or affirm that I will file an amended Form NYC-RPT and pay any additional tax due if any such transfer or conveyance occurs within such two-year period or if condition 3 above, if applicable, ceases to be met.

GRANTOR

Sworn to and subscribed to before me on this _____ day of _____, _____

_____
Signature of Notary

_____
Name of Grantor

_____
Signature of Grantor

Notary's stamp or seal

GRANTEE

Sworn to and subscribed to before me on this _____ day of _____, _____

_____
Signature of Notary

_____
Name of Grantee

_____
Signature of Grantee

Notary's stamp or seal

AFFIDAVIT OF COMPLIANCE
WITH SMOKE DETECTOR REQUIREMENT FOR ONE- AND TWO-FAMILY DWELLINGS

State of New York
County of } **SS.:**

The undersigned, being duly sworn, depose and say under penalty of perjury that they are the grantor and grantee of the real property or of the cooperative shares in a cooperative corporation owning real property located at

_____ , _____ ,
Street Address Unit/Apt.

_____ New York, _____ _____ (the "Premises");
Borough Block Lot

That the Premises is a one or two family dwelling, or a cooperative apartment or condominium unit in a one- or two-family dwelling, and that installed in the Premises is an approved and operational smoke detecting device in compliance with the provisions of Article 6 of Subchapter 17 of Chapter 1 of Title 27 of the Administrative Code of the City of New York concerning smoke detecting devices;

That they make affidavit in compliance with New York City Administrative Code Section 11-2105 (g). (The signatures of at least one grantor and one grantee are required, and must be notarized).

_____ Name of Grantor (Type or Print)	_____ Name of Grantee (Type or Print)
_____ Signature of Grantor	_____ Signature of Grantee
Sworn to before me this _____ date of _____ 20 _____	Sworn to before me this _____ date of _____ 20 _____

These statements are made with the knowledge that a willfully false representation is unlawful and is punishable as a crime of perjury under Article 210 of the Penal Law.

NEW YORK CITY REAL PROPERTY TRANSFER TAX RETURNS FILED ON OR AFTER FEBRUARY 6th, 1990, WITH RESPECT TO THE CONVEYANCE OF A ONE- OR TWO-FAMILY DWELLING, OR A COOPERATIVE APARTMENT OR A CONDOMINIUM UNIT IN A ONE- OR TWO-FAMILY DWELLING, WILL NOT BE ACCEPTED FOR FILING UNLESS ACCOMPANIED BY THIS AFFIDAVIT.

Instructions for Form NYC-RPT

NYC Finance

Real Property Transfer Tax Return

IMPORTANT

1. **Always submit pages 1-4 of the return and Smoke Detector Requirement Affidavit. Attach Schedules A through I, Schedule M and Schedule R as required.**
2. **Where the consideration is $400,000 or more, a copy of the Contract of Sale or closing statement must be attached to the return.**
3. **Please file your return at the correct office. See FILING OF RETURN on pages 16 and 17.**
4. **A fee of one hundred dollars ($100) must be paid upon the filing of the form NYC-RPT for those transactions for which the filing of a New York State Real Property Transfer Report (RP-5217NYC) is not required to be filed. Such transactions include, but are not limited to, transfers of co-ops, leaseholds and controlling economic interests.**

IMPOSITION OF TAX

The tax is imposed on conveyances of real property or interests therein, on certain grants, assignments or surrenders of leasehold interests, on transfers of controlling economic interests in real property and on all transfers of shares of stock in a cooperative housing corporation or an entity formed for the purpose of cooperative ownership of real property when the consideration as entered on Schedule 2, Computation of Tax, line 3 exceeds $25,000.

An ***economic interest*** in real property means:

- the ownership of shares of stock in a corporation which owns or leases real property;
- the ownership of an interest or interests in a partnership, association, or other unincorporated entity which owns or leases real property; and
- the ownership of a beneficial interest or interests in a trust which owns or leases real property.

A ***controlling interest*** in the case of a *corporation* means:

- 50% or more of the total combined voting power of all classes of stock of the corporation; or
- 50% or more of the total fair market value of all classes of stock of the corporation.

A ***controlling interest*** in the case of a ***partnership, association, trust or other unincorporated entity*** means:

- 50% or more of the capital, profits or beneficial interest in the partnership, association, trust or other unincorporated entity.

NAME AND ADDRESS BOX

Print or type the names, addresses, and social security or employer identification numbers of the grantor and grantee as they appear in your deed, lease, or other instrument that conveys the interest in real property. If the grantor or grantee is a single member LLC, enter the names and identification numbers (SSN and/or EIN) for both the LLC and the single member. If the conveyance is pursuant to a mortgage foreclosure or any other action governed by the Real Property Actions and Proceedings Law, the defaulting mortgagor or debtor is the grantor. If this transaction includes more than one grantor or grantee, complete Schedule 3 and provide the requested information for all such grantors or grantees that are not listed on page 1 of this form. For any grantor and grantee that is a partnership or a multiple member LLC, provide the requested information for each general partner or member (name and SSN/EIN) in a supporting document with a separate page for each partnership or LLC, including the name of the partnership or LLC. If the social security number or employer identification number is not provided for each grantor and grantee, the general partners of a partnership or members of an LLC which is either a grantor or grantee, or the single member of single member LLC, attach an affidavit attesting to the reasons that information is missing.

PROPERTY LOCATION

Enter the location of the property that is transferred or the location of the property in which an economic interest is transferred. If the transfer involves more than one property, list the properties separately. Attach additional sheets if necessary.

CONDITION OF TRANSFER - Check all boxes that apply

g. Check here if the transfer was pursuant to a partial or complete liquidation of a corporation, partnership or other entity. See instructions for Schedule D.

k. A gift of real property (or an interest therein) that is subject to indebtedness may be subject to tax because the indebtedness is deemed to be consideration for the transfer. However, see instructions for Schedule 2, line 2, transfers of interests in residential property on or after August 28, 1997.

o. Nonprofit organizations should see instructions, page **17** for information on exemption from Real Estate Tax and related charges.

v. Check this box if the conveyance involved the grant or assignment of a leasehold interest in real property located in a tax-free New York area to an approved business participating in the START-UP NY program. These transfers are exempt from the New York City Real Property Transfer Tax. See NYS Tax Law §39(g) and New York State Tax Form TP-584-SNY.

Type of Property

Check the type of property that is transferred or in which an interest is transferred.

Type of Interest

For any transfer where you intend to record a deed or other document you should check the relevant box at the left and file your return pursuant to the instructions on pages 16 and 17 of this booklet.

If you are not recording a deed or other document in connection with this transaction, check the box at the right and file your return with the New York City Department of Finance, Non-Recorded RPTT Return Processing, 66 John Street, 13th Floor, New York, NY 10038, pursuant to the instructions on pages 16 and 17 of this booklet.

If this is a transfer of stock in a cooperative housing corporation, complete Schedule B. If this is a transfer of stock or of partnership interests or other controlling economic interest in real property, complete Schedule H.

SCHEDULE 1
DETAILS OF CONSIDERATION

Cooperatives. In the case of a transfer of an individual residential cooperative unit (other than the original transfer of the unit by the cooperative corporation or cooperative plan sponsor) the consideration does not include any portion of the mortgage on the underlying real property. In the case of an original transfer of any cooperative unit, or of a subsequent transfer of a cooperative unit other than an individual residential unit, a proportionate share of any preexisting mortgage(s) on the underlying real property must be included in the consideration. An individual unit that is used for residential purposes by the occupant shall be presumed to be residential unless such residential use is *de minimis*.

Liquidations. In the case of a liquidation of a corporation, partnership, or other entity, if the fair market value of the property or interest therein distributed exceeds the consideration received, such fair market value is the measure of the tax. Enter the amount from Schedule D, line 3 on Schedule 1, line 11.

Marital Transfers. In the case of a transfer pursuant to a separation agreement, marital settlement agreement or divorce decree, consideration will be presumed to be equal to the fair market value of the portion of the property or interest transferred unless you establish the consideration to be a different amount.

If the measure of consideration is fair market value, the fair market value amount should not be reduced by any mortgages on the property. The fair market value amount should be inserted on Line 10 of Schedule 1.

If the measure of consideration is a value for the property that is specified in an agreement or decree, this value should reflect the portion of any mortgage the grantee may have assumed and/or taken subject to rather than reflect only the equity transferred. The specified value should be inserted on Line 10 of Schedule 1. If the specified value does not include mortgages, the mortgage amounts must be added as appropriate on line(s) 2, 3, 4, or 6 of Schedule 1.

In either situation, if the real property is encumbered by any mortgages that qualify as excludible liens, you may deduct the percentage of any excludible liens equal to the percentage of the interest in the real property that is transferred on Line 2 of Schedule 2.

In addition, you must complete Schedule I.

Transfers to Business Entities. In the case of a transfer of property or interest therein to a business entity in exchange for an interest in the entity, the value of such interest in the entity is equal to the fair market value of the property or interest therein less the amount of mortgages, liens or encumbrances thereon. (See Schedules F and M)

SCHEDULE 2
COMPUTATION OF TAX

PAYMENT -
If the real property is located in Staten Island (Richmond County), make check or money order payable to: **Richmond County Clerk.**

For real property not located in Staten Island, make check or money order payable to: **NYC Department of Finance.**

LINE 1 - Total Consideration
Enter the amount from line 11, Schedule1, page 2.

LINE 2 - Excludible liens- Transfers involving certain residential property or interest therein
With certain exceptions, the amount of mortgages, liens or encumbrances is excluded from consideration for the transfer on or after August 28, 1997 of a one-, two-, or three-family house, an individual residential cooperative apartment or individual residential condominium unit, or economic interest in such property if the mortgage, lien or encumbrance existed before the date of the transfer and remains on the property or interest after the date of the transfer. This provision does not apply to any mortgage, lien or encumbrance placed on the property or interest in connection with, or in anticipation of, the transfer, or by reason of deferred payments of the purchase price. This exclusion also does not apply to a transfer to a mortgagee, lienor or encumbrancer of the property or interest, or to a qualifying real estate investment trust transfer. Recently adopted rules govern the application of the exclusion. Under the rules, an existing mortgage will be excluded in all transfers pursuant to gifts or divorce. In any other transfer, an examination time period beginning six months prior to, and ending three months after, the transfer is established. Mortgages placed on the property or discharged outside that time period will be excluded unless there is documentary evidence that the mortgage was placed or discharged in connection with the transfer. Mortgages placed or discharged within the examination period will be excluded unless the facts and circumstances indicate that the mortgage was placed or discharged in connection with the transfer. Mortgages that are modified will be excluded in all cases except where the modifications occur within the examination period AND result in a change in the identity of the lender PLUS a change of at least ten percent in either the interest rate or term of the mortgage loan. See Title 19 of the Rules of the City of NY §23-03(k) for more information.

Enter on line 2 of Schedule 2 the amount of any mortgage, lien or encumbrance included in the amount entered on line 3 of Schedule 1 that is eligible for the exclusion described above.

NOTE: *You may not enter any amount online 2 if you have not checked box a, b or c under "Type of Property" on page 2 of Form NYC-RPT or you HAVE checked box d, f, q or t under "Condition of Transfer".*

LINE 4 - Tax Rate

Insert the appropriate tax rate based on the consideration on line 3. Note: the tax rate is determined after certain liens are excluded but before taking into account the mere change of form exemption. Tax rates depend on the kind of real property that is transferred or is held by the entity whose stock or partnership interest is the subject of this transfer.

Effective for transfers on or after August 1, 1989, the tax rates are as follows:

Certain Residential Property and Interests
1% of the consideration where the consideration is $500,000 or less or 1.425% of the consideration where the consideration is greater than $500,000 in the following instances:

- conveyances where the real property transferred, or the real property in which the economic interest is transferred, is a one-, two-, or three family house, an individual cooperative apartment, an individual residential condominium unit, or an individual dwelling unit in a dwelling which is to be occupied as the residence or home of four or more families living independently of each other; and
- grants, assignments or surrenders of leasehold interests in a one-, two-, or three-

family house, or an individual dwelling unit in a dwelling which is to be occupied or is occupied as the residence or home of four or more families living independently of each other.

An individual condominium that is used for residential purposes by the occupant shall be presumed to be residential, unless such residential use is *de minimis*. (For illustrations, see RCNY Section 23-03(b)(9) and (10).)

Other Transfers

- For all transfers involving property or interests in property other than the residential property specified above, the rate is 1.425% of the consideration where the consideration is $500,000 or less or 2.625% of the consideration where the consideration is greater than $500,000.

LINE 5

If you qualify for the "Mere Change In Form Exemption", enter the percentage from Schedule M, line 2, Column f. If you do not qualify for the Mere Change In Form Exemption, enter 100%.

LINE 7 - Tax

Attach additional schedules 1 and 2 if varying tax rates apply.

LINE 8 - Credit

a. **Liquidations** - If a purchaser acquires a controlling economic interest in a corporation, partnership, association, trust or other entity owning real property in a transaction subject to the Real Property Transfer Tax and within 24 months of such acquisition the entity owning the real property or interest therein is liquidated and the real property or interest therein is conveyed to the purchaser of the controlling economic interest, a credit is available against the transfer tax due on the liquidation in the amount of the transfer tax paid with respect to the original acquisition of the controlling economic interest. In no event shall this credit be greater than the tax payable upon the conveyance in liquidation.

b. **Original Co-op Transfer** - In the case of the original transfer of cooperative housing corporation stock by a cooperative corporation or cooperative plan sponsor in connection with the grant or transfer of a proprietary leasehold, a credit is allowed for a proportionate part of the amount of any tax paid upon the conveyance to the cooperative housing corporation of the land and building or buildings comprising the cooperative dwelling or dwellings. This credit applies only for original transfers of stock by the cooperative housing corporation or cooperative plan sponsor. It does not apply to taxable resales of cooperative housing corporation stock.

No credit is allowed for any tax paid more than 24 months prior to the date on which occurs the first in a series of transfers of shares of stock in the initial offering of cooperative housing corporation shares.

Attach a detailed schedule to support the credit claimed on this line.

LINE 10 - Interest

If the tax is not paid on or before the due date (determined without regard to any extension of time), interest must be paid on the amount of the underpayment from the due date to the date paid. For information as to the applicable rate of interest call *(212) 504-4036*.

LINE 11 - Penalties

a) If you fail to file a return when due, add to the tax 5% for each month or partial month the form is late up to 25%, unless the failure is due to reasonable cause.

b) If you fail to pay the tax shown on the return by the prescribed filing date, add to the tax (less any payments made) 1/2% for each month or partial month the payment is late up to 25%, unless the failure is due to reasonable cause.

c) The total of the additional charges in a) and b) may not exceed 5% for any one month.

SCHEDULE 3

If this transaction includes more than one grantor or grantee, complete this schedule and provide the requested information for all such grantors or grantees that are not listed on page 1 of this form. For any grantor and grantee that is a single member LLC, provide the requested information for the single member (name and EIN or SSN). For any grantor and grantee that is a partnership or multiple member LLC, provide the requested information for each general partner or member (name and SSN) on a supporting document with a separate page for each partnership or LLC, including the name of the partnership or LLC. If the social security number or employer identification number is not provided for each grantor and grantee, the single member of a single member LLC or a general partner of a partnership or a member of a multiple member LLC which is either a grantor or grantee, attach an affidavit attesting to the reasons that information is missing.

SCHEDULE A

Line 2d

If bid price is paid in cash, enter here and on Schedule 1, line 1. If other than cash, enter here and on the appropriate line on Schedule 1.

Line 2f

Enter remaining mortgages, liens or encumbrances here and on Schedule 1, line 3, 4, 5, 6 or 10 as appropriate.

SCHEDULE C

Line 4

Enter remaining mortgages, liens or encumbrances here and on Schedule 1, line 3, 4, 5, 6 or 10 as appropriate.

SCHEDULE D

In a liquidation, the measure of the tax is the greater of fair market value or consideration. The greater of fair market value or consideration, and the applicable rate of tax are determined separately for each parcel of real property or economic interest in a parcel of real property that is distributed in a liquidation. If this transaction involves the distribution in liquidation of more than one such parcel or economic interest, complete a separate Schedule D for each such property or interest. Attach additional schedules 1 and 2 as necessary. (See §23-03 (g) of the rules of the City of New York for examples of calculation of the tax base in liquidations.)

SCHEDULE F

Line 8

If you received other property in exchange for the real property or interest therein that was transferred to the business entity, enter the value of the other property here. If assets other than real property or interests therein were transferred to the business entity in connection with this transaction, the consideration received must be apportioned among the assets transferred. Attach schedule.

SCHEDULE H

If the entity named in A owns assets in addition to real property or interests therein, the consideration subject to tax is deemed equal to the fair market value of the entity's real property or interests therein multiplied by the percentage of the ownership interest that is transferred. See Administrative Code §11-2102(d). Consideration should be entered on Schedule 1 on appropriate lines.

If the entity named in A owns more than one parcel of real property or economic interest therein, the consideration and the applicable rate of tax is determined separately for each parcel of property or economic interest. Attach separate Schedules H, 1 and 2, as necessary.

If any of the percentages in B, C, D, E or F is 50 percent or more, a return must be filed and tax paid with respect to any transaction reflected in items B, C, D, E or F. The tax rate applicable to each item of real property or economic interest therein is based on its proportionate share of the aggregate consideration for all transactions reflected in items B, C, D, E or F.

SCHEDULE M - MERE CHANGE OF FORM TRANSFERS

For transfers occurring on or after June 9, 1994, a transfer that represents a mere change in identity or form of ownership or organization is not taxable to the extent the beneficial ownership of the real property or economic interest therein remains the same. (NYC Administrative Code Section 11-2106 (b) (8)). However, a transfer to a cooperative housing corporation, other than a corporation formed under Articles 2, 4, 5, or 11 of the Private Housing Finance Law, of the property that will comprise the cooperative dwelling will not qualify for this exemption.

The following are types of transfers that may qualify for the mere-change exemption in whole or in part. If you checked condition "g", "i", or "l" on Form NYC-RPT, page 1, the transfer may qualify for this exemption in whole or in part. Transfers other than those listed may also qualify for the exemption in whole or in part.

a. A transfer of property or interest therein to a new or pre-existing corporation in which the owners of the property or interest therein prior to the transfer are shareholders;

b. A transfer of property or interest therein by one wholly-owned subsidiary of a corporation to another wholly-owned subsidiary of the same corporation;

c. A transfer of property or interest therein to a new or pre-existing partnership in which the owners of the property or interest therein prior to the transfer are partners; or

d. A distribution of property or interest therein by a corporation or partnership to its shareholders or partners.

Examples:

1. A transfer of property owned by three individuals as equal tenants-in common to a corporation or partnership in which the same three individuals are equal shareholders or partners will be fully exempt as a mere change of form of ownership.

2. A transfer of a cooperative apartment owned by an individual to a corporation in which the individual is a 25 percent shareholder will be exempt to the extent that the individual retains a 25% beneficial interest in the coop after the transfer.

3. Corporation X is owned 25% by individual A and 75% by individual B. If Corporation X distributes New York City real property to A and B as equal tenants-in-common, the transfer will be exempt to the extent A retains the same 25 percent interest in the property and B retains a 50 percent interest in the property. The transfer will be taxable to the extent of the additional 25 percent interest in the property transferred to A

For additional information, see Title 19 of the Rules of the City of NY §23-05(b)(8).

EXEMPTIONS FROM THE TRANSFER TAX

A. The following parties are exempt from the payment of the tax and from filing a return:

1. The State of New York, its agencies, instrumentalities, public corporations (including a public corporation created pursuant to agreement of compact with another state or Canada) or political subdivisions.

2. The United States of America and its agencies and instrumentalities, insofar as they are immune from taxation.

The exemption of such governmental bodies does not relieve a grantee from them of liability for the tax or from filing a return.

B. The tax imposed does not apply to any of the following deeds:

1. A deed, instrument or transaction by or to the United Nations or any other world-wide international organization of which the United States is a member.

2. A deed, instrument or transaction by or to any corporation, association, trust, community chest, fund or foundation, organized and operated exclusively for religious, charitable, or educational purposes, or for the prevention of cruelty to children or animals, and no part of the net earnings of which inures to the benefit of any private shareholder or individual and no substantial part of the activities of which is carrying on propaganda, or otherwise attempting to influence legislation, provided, however, that nothing in this paragraph shall include an organization operated for the primary purpose of carrying on a trade or business for profit, whether or not all of its profits are payable to one or more organizations described in this paragraph.

3. A deed, instrument or transaction to any governmental body listed in "A" above.

4. A deed or instrument given solely as security for a debt, or a deed or instrument given solely for the purpose of returning such security.

5. A deed or instrument or transaction from a mere agent, dummy, strawman or conduit to a principal, or a deed from the principal to an agent, dummy, strawman or conduit.

Where a tax does not apply to any deed, neither the grantor nor the grantee is required to pay the tax. However, a return relating to the deed must be filed.

C. The tax does not apply to the grant or assignment of a leasehold interest in real property located in a tax-free New York area to an approved business participating in the START-UP NY program. See NYS Tax Law §39(g) and New York State Tax Form TP-584-SNY.

FILING OF RETURN AND PAYMENT OF FILING FEE AND TAX

A notarized joint return shall be filed by both the grantor and the grantee for each deed, instrument, or transaction, whether or not a tax is due. Thus, a return must be filed although the consideration for the transaction is $25,000 or less. Where the total consideration is $400,000 or more, a copy of the contract of sale or closing statement must be attached to the return. A return need not be filed for the grant of a leasehold interest in a 1-, 2-, or 3-family house or an individual dwelling unit except where tax is owed or the lease is to be recorded.

FILING FEE

A fee of one hundred dollars ($100) must be paid upon the filing of the form NYC-RPT for those transactions for which the filing of a New York State Real Property Transfer Report (RP-5217NYC) is not required to be filed. Such transactions include, but are not limited to, transfers of co-ops, leaseholds and controlling economic interests.

RECORDED TRANSFERS

Returns relating to a transfer in Manhattan, the Bronx, Brooklyn or Queens, where a deed or other document is recorded, must be filed via ACRIS (nyc.gov/finance). **Any tax due is required to be paid at the office of the City Register in the county where the deed is recorded within 30 days of the delivery of the deed.**

In Staten Island, returns relating to a transfer in Staten Island where a deed or other document is recorded, are required to be filed using the paper original and any tax due is required to be paid at the Office of the County Clerk for Richmond County within 30 days of the delivery of the deed.

The locations of the offices of the City Register are as follows:

MANHATTAN (New York County)
66 John Street, 13th Floor
New York, New York 10038

BRONX (Bronx County)
3030 Third Avenue, 2nd Floor
Bronx, New York 10455

BROOKLYN (Kings County)
210 Joralemon Street, Room 2
Brooklyn, New York 11201

QUEENS (Queens County)
144-06 94th Avenue
Jamaica, NY 11435

The location of the Richmond County Clerk is as follows:

STATEN ISLAND (Richmond County)
Richmond County Clerk
County Court House, Room 103
Staten Island, New York 10301
(718) 390-5386

NON-RECORDED TRANSFERS

In the case of transfers where no document is recorded, including but not limited to transfers of controlling economic interests in real property or transfers of interests in entities formed for cooperative ownership of real property, returns must be filed within 30 days of the transfer with:

NYC Department of Finance
Non-Recorded RPTT Return Processing
66 John Street, 13th Floor
New York, NY 10038

The tax may be paid by certified check, or an Attorney's Trust Account check, drawn on a U.S. bank, or money order made payable to the order of:

NYC Department of Finance.

Returns filed on or after February 6, 1990, in connection with a conveyance of a one- or two-family dwelling or a cooperative apartment or condominium unit in a one- or two-family dwelling must be accompanied by an Affidavit of Compliance with Smoke Detector Requirement.

NYC-RPT returns are available at City Register offices, the office of the Richmond County Clerk or online at **nyc.gov/finance**.

IMPORTANT REAL ESTATE TAX INFORMATION FOR NONPROFIT ORGANIZATIONS

If you are a nonprofit organization you should know:

1. You must apply for an exemption from Real Estate Tax with the Payment Operations Division. Exemption forms can be obtained online at **nyc.gov/finance**, or any of the Borough Offices of the Property Division.

MANHATTAN
66 John Street, 13th Floor
New York, NY 10038

BRONX
3030 Third Avenue, 2nd Floor
Bronx, NY 10455

BROOKLYN
210 Joralemon St., Room 200
Brooklyn, NY 11201

QUEENS
144-06 94th Avenue
Jamaica, NY 11435

STATEN ISLAND
350 St. Marks Place
Staten Island, NY 10301

2. Once you have received an exemption, you must renew it every year with the Payment Operations Division.

3. Many groups are exempt from property taxes but still may be required to pay water and sewer charges. You must file separately for an exemption from water and sewer charges with the Bureau of Customer and Conservation Services. Applications can be obtained from any of the Bureau's borough offices (call (718) 595-7000 for addresses). Once granted, this exemption need not be renewed annually.

EVEN IF THIS TRANSFER OF REAL PROPERTY IS FROM ANOTHER NONPROFIT ORGANIZATION, YOU MUST STILL COMPLY WITH THE ABOVE REQUIREMENTS.

For more information call 311, or visit our website at **nyc.gov/finance**

PRIVACY ACT NOTIFICATION

The Federal Privacy Act of 1974, as amended, requires agencies requesting Social Security Numbers to inform individuals from whom they seek this information as to whether compliance with the request is voluntary or mandatory, why the request is being made and how the information will be used. The disclosure of Social Security Numbers for grantors and grantees is mandatory and is required by section 11-102.1 of the Administrative Code of the City of New York. Disclosure by attorneys is voluntary. Such numbers disclosed on any report or return are requested for tax administration purposes and will be used to facilitate the processing of tax returns and to establish and maintain a uniform system for identifying taxpayers who are or may be subject to taxes administered and collected by the Department of Finance. Such numbers may also be disclosed as part of information contained in the taxpayer's return to another department, person, agency or entity as may be required by law, or if the taxpayer gives written authorization to the Department of Finance.

FOR CITY USE ONLY

C1. County Code ____ C2. Date Deed Recorded ___ / ___ / ___ (Month Day Year)

C3. Book ____ C4. Page ____

OR

C5. CRFN ____

REAL PROPERTY TRANSFER REPORT

STATE OF NEW YORK
STATE BOARD OF REAL PROPERTY SERVICES

RP - 5217NYC

PROPERTY INFORMATION

1. Property Location ____ STREET NUMBER ____ STREET NAME ____ BOROUGH ____ ZIP CODE

2. Buyer Name ____ LAST NAME / COMPANY ____ FIRST NAME

____ LAST NAME / COMPANY ____ FIRST NAME

3. Tax Billing Address Indicate where future Tax Bills are to be sent if other than buyer address (at bottom of form) ____ LAST NAME / COMPANY ____ FIRST NAME

____ STREET NUMBER AND STREET NAME ____ CITY OR TOWN ____ STATE ____ ZIP CODE

4. Indicate the number of Assessment Roll parcels transferred on the deed ____ # of Parcels OR ☐ Part of a Parcel

4A. Planning Board Approval - N/A for NYC

4B. Agricultural District Notice - N/A for NYC

Check the boxes below as they apply:

6. Ownership Type is Condominium ☐

7. New Construction on Vacant Land ☐

5. Deed Property Size ____ FRONT FEET X ____ DEPTH OR ____ ACRES

8. Seller Name ____ LAST NAME / COMPANY ____ FIRST NAME

____ LAST NAME / COMPANY ____ FIRST NAME

9. Check the box below which most accurately describes the use of the property at the time of sale:

A ☐ One Family Residential
B ☐ 2 or 3 Family Residential
C ☐ Residential Vacant Land
D ☐ Non-Residential Vacant Land
E ☐ Commercial
F ☐ Apartments
G ☐ Entertainment / Amusement
H ☐ Community Service
I ☐ Industrial
J ☐ Public Service

SALE INFORMATION

10. Sale Contract Date ___ / ___ / ___ (Month Day Year)

11. Date of Sale / Transfer ___ / ___ / ___ (Month Day Year)

12. Full Sale Price $ ____ 0

(Full Sale Price is the total amount paid for the property including personal property. This payment may be in the form of cash, other property or goods, or the assumption of mortgages or other obligations.) *Please round to the nearest whole dollar amount.*

13. Indicate the value of personal property included in the sale ____

14. Check one or more of these conditions as applicable to transfer:

A ☐ Sale Between Relatives or Former Relatives
B ☐ Sale Between Related Companies or Partners in Business
C ☐ One of the Buyers is also a Seller
D ☐ Buyer or Seller is Government Agency or Lending Institution
E ☐ Deed Type not Warranty or Bargain and Sale (Specify Below)
F ☐ Sale of Fractional or Less than Fee Interest (Specify Below)
G ☐ Significant Change in Property Between Taxable Status and Sale Dates
H ☐ Sale of Business is Included in Sale Price
I ☐ Other Unusual Factors Affecting Sale Price (Specify Below)
J ☐ None

ASSESSMENT INFORMATION - Data should reflect the latest Final Assessment Roll and Tax Bill

15. Building Class ____

16. Total Assessed Value (of all parcels in transfer) ____ 0

17. Borough, Block and Lot / Roll Identifier(s) (If more than three, attach sheet with additional identifier(s))

____ ____ ____

Draft Required Fields Not Completed

CERTIFICATION

I certify that all of the items of information entered on this form are true and correct (to the best of my knowledge and belief) and understand that the making of any willful false statement of material fact herein will subject me to the provisions of the penal law relative to the making and filing of false instruments.

BUYER			BUYER'S ATTORNEY	
BUYER SIGNATURE		DATE	LAST NAME	FIRST NAME
STREET NUMBER	STREET NAME (AFTER SALE)		AREA CODE	TELEPHONE NUMBER
			SELLER	
CITY OR TOWN	STATE	ZIP CODE	SELLER SIGNATURE	DATE

2015070800215201

TP-584 (4/13)

New York State Department of Taxation and Finance

Combined Real Estate Transfer Tax Return, Credit Line Mortgage Certificate, and Certification of Exemption from the Payment of Estimated Personal Income Tax

Recording office time stamp

See Form TP-584-I, Instructions for Form TP-584, *before completing this form. Print or type.*

Schedule A — Information relating to conveyance

Grantor/Transferor		
☐ Individual ☐ Corporation ☐ Partnership ☐ Estate/Trust ☐ Single member LLC ☐ Other	Name *(if individual, last, first, middle initial)* (☐ *check if more than one grantor)*	Social security number
	Mailing address	Social security number
	City State ZIP code	Federal EIN
	Single member's name if grantor is a single member LLC *(see instructions)*	Single member EIN or SSN

Grantee/Transferee		
☐ Individual ☐ Corporation ☐ Partnership ☐ Estate/Trust ☐ Single member LLC ☐ Other	Name *(if individual, last, first, middle initial)* (☐ *check if more than one grantee)*	Social security number
	Mailing address	Social security number
	City State ZIP code	Federal EIN
	Single member's name if grantee is a single member LLC *(see instructions)*	Single member EIN or SSN

Location and description of property conveyed

Tax map designation – Section, block & lot *(include dots and dashes)*	SWIS code (six digits)	Street address	City, town, or village	County

Type of property conveyed *(check applicable box)*

1 ☐ One- to three-family house
2 ☐ Residential cooperative
3 ☐ Residential condominium
4 ☐ Vacant land
5 ☐ Commercial/Industrial
6 ☐ Apartment building
7 ☐ Office building
8 ☐ Other _____

Date of conveyance

month	day	year

Percentage of real property conveyed which is residential real property _____ %
(see instructions)

Condition of conveyance *(check all that apply)*

a. ☐ Conveyance of fee interest

b. ☐ Acquisition of a controlling interest (state percentage acquired _____ %)

c. ☐ Transfer of a controlling interest (state percentage transferred _____ %)

d. ☐ Conveyance to cooperative housing corporation

e. ☐ Conveyance pursuant to or in lieu of foreclosure or enforcement of security interest *(attach Form TP-584.1, Schedule E)*

f. ☐ Conveyance which consists of a mere change of identity or form of ownership or organization *(attach Form TP-584.1, Schedule F)*

g. ☐ Conveyance for which credit for tax previously paid will be claimed *(attach Form TP-584.1, Schedule G)*

h. ☐ Conveyance of cooperative apartment(s)

i. ☐ Syndication

j. ☐ Conveyance of air rights or development rights

k. ☐ Contract assignment

l. ☐ Option assignment or surrender

m. ☐ Leasehold assignment or surrender

n. ☐ Leasehold grant

o. ☐ Conveyance of an easement

p. ☐ Conveyance for which exemption from transfer tax claimed *(complete Schedule B, Part III)*

q. ☐ Conveyance of property partly within and partly outside the state

r. ☐ Conveyance pursuant to divorce or separation

s. ☐ Other *(describe)* _____

For recording officer's use	Amount received	Date received	Transaction number
	Schedule B., Part I $ _____ Schedule B., Part II $		

Schedule B — Real estate transfer tax return (Tax Law, Article 31)

Part I – Computation of tax due

1	Enter amount of consideration for the conveyance *(if you are claiming a total exemption from tax, check the exemption claimed box, enter consideration and proceed to Part III)* ☐ **Exemption claimed**	1.	
2	Continuing lien deduction *(see instructions if property is taken subject to mortgage or lien)*	2.	
3	Taxable consideration *(subtract line 2 from line 1)*	3.	
4	Tax: $2 for each $500, or fractional part thereof, of consideration on line 3	4.	
5	Amount of credit claimed for tax previously paid *(see instructions and attach Form TP-584.1,* Schedule G*)*	5.	
6	Total tax due* *(subtract line 5 from line 4)*	6.	

Part II – Computation of additional tax due on the conveyance of residential real property for $1 million or more

1	Enter amount of consideration for conveyance *(from* Part I, *line 1)*	1.	
2	Taxable consideration *(multiply line 1 by the percentage of the premises which is residential real property, as shown in* Schedule A*)*	2.	
3	Total additional transfer tax due* *(multiply line 2 by 1% (.01))*	3.	

Part III – Explanation of exemption claimed on Part I, line 1 *(check any boxes that apply)*

The conveyance of real property is exempt from the real estate transfer tax for the following reason:

a. Conveyance is to the United Nations, the United States of America, the state of New York, or any of their instrumentalities, agencies, or political subdivisions (or any public corporation, including a public corporation created pursuant to agreement or compact with another state or Canada) ..... a ☐

b. Conveyance is to secure a debt or other obligation ..... b ☐

c. Conveyance is without additional consideration to confirm, correct, modify, or supplement a prior conveyance ..... c ☐

d. Conveyance of real property is without consideration and not in connection with a sale, including conveyances conveying realty as bona fide gifts ..... d ☐

e. Conveyance is given in connection with a tax sale ..... e ☐

f. Conveyance is a mere change of identity or form of ownership or organization where there is no change in beneficial ownership. (This exemption cannot be claimed for a conveyance to a cooperative housing corporation of real property comprising the cooperative dwelling or dwellings.) Attach Form TP-584.1, Schedule F ..... f ☐

g. Conveyance consists of deed of partition ..... g ☐

h. Conveyance is given pursuant to the federal Bankruptcy Act ..... h ☐

i. Conveyance consists of the execution of a contract to sell real property, without the use or occupancy of such property, or the granting of an option to purchase real property, without the use or occupancy of such property ..... i ☐

j. Conveyance of an option or contract to purchase real property with the use or occupancy of such property where the consideration is less than $200,000 and such property was used solely by the grantor as the grantor's personal residence and consists of a one-, two-, or three-family house, an individual residential condominium unit, or the sale of stock in a cooperative housing corporation in connection with the grant or transfer of a proprietary leasehold covering an individual residential cooperative apartment ..... j ☐

k. Conveyance is not a conveyance within the meaning of Tax Law, Article 31, section 1401(e) *(attach documents supporting such claim)* ..... k ☐

*The total tax (from Part I, line 6 and Part II, line 3 above) is due within 15 days from the date conveyance. Please make check(s) payable to the county clerk where the recording is to take place. If the recording is to take place in the New York City boroughs of Manhattan, Bronx, Brooklyn, or Queens, make check(s) payable to the ***NYC Department of Finance.*** If a recording is not required, send this return and your check(s) made payable to the ***NYS Department of Taxation and Finance,*** directly to the NYS Tax Department, RETT Return Processing, PO Box 5045, Albany NY 12205-5045.

Schedule C — Credit Line Mortgage Certificate (Tax Law, Article 11)

Complete the following only if the interest being transferred is a fee simple interest.
I (we) certify that: *(check the appropriate box)*

1. ☐ The real property being sold or transferred is not subject to an outstanding credit line mortgage.

2. ☐ The real property being sold or transferred is subject to an outstanding credit line mortgage. However, an exemption from the tax is claimed for the following reason:
   - ☐ The transfer of real property is a transfer of a fee simple interest to a person or persons who held a fee simple interest in the real property (whether as a joint tenant, a tenant in common or otherwise) immediately before the transfer.
   - ☐ The transfer of real property is (A) to a person or persons related by blood, marriage or adoption to the original obligor or to one or more of the original obligors or (B) to a person or entity where 50% or more of the beneficial interest in such real property after the transfer is held by the transferor or such related person or persons (as in the case of a transfer to a trustee for the benefit of a minor or the transfer to a trust for the benefit of the transferor).
   - ☐ The transfer of real property is a transfer to a trustee in bankruptcy, a receiver, assignee, or other officer of a court.
   - ☐ The maximum principal amount secured by the credit line mortgage is $3,000,000 or more, and the real property being sold or transferred is **not** principally improved nor will it be improved by a one- to six-family owner-occupied residence or dwelling.

     Please note: for purposes of determining whether the maximum principal amount secured is $3,000,000 or more as described above, the amounts secured by two or more credit line mortgages may be aggregated under certain circumstances. See TSB-M-96(6)-R for more information regarding these aggregation requirements.
   - ☐ Other *(attach detailed explanation)*.

3. ☐ The real property being transferred is presently subject to an outstanding credit line mortgage. However, no tax is due for the following reason:
   - ☐ A certificate of discharge of the credit line mortgage is being offered at the time of recording the deed.
   - ☐ A check has been drawn payable for transmission to the credit line mortgagee or his agent for the balance due, and a satisfaction of such mortgage will be recorded as soon as it is available.

4. ☐ The real property being transferred is subject to an outstanding credit line mortgage recorded in _____ (insert liber and page or reel or other identification of the mortgage). The maximum principal amount of debt or obligation secured by the mortgage is _____. No exemption from tax is claimed and the tax of _____ is being paid herewith. *(Make check payable to county clerk where deed will be recorded or, if the recording is to take place in New York City but not in Richmond County, make check payable to the* ***NYC Department of Finance.****)*

Signature (both the grantor(s) and grantee(s) must sign)

The undersigned certify that the above information contained in schedules A, B, and C, including any return, certification, schedule, or attachment, is to the best of his/her knowledge, true and complete, and authorize the person(s) submitting such form on their behalf to receive a copy for purposes of recording the deed or other instrument effecting the conveyance.

Grantor signature	Title	Grantee signature	Title
Grantor signature	Title	Grantee signature	Title

Reminder: Did you complete all of the required information in Schedules A, B, and C? Are you required to complete Schedule D? If you checked *e*, *f*, or *g* in Schedule A, did you complete Form TP-584.1? Have you attached your check(s) made payable to the county clerk where recording will take place or, if the recording is in the New York City boroughs of Manhattan, Bronx, Brooklyn, or Queens, to the ***NYC Department of Finance***? If no recording is required, send your check(s), made payable to the ***Department of Taxation and Finance,*** directly to the NYS Tax Department, RETT Return Processing, PO Box 5045, Albany NY 12205-5045.

Schedule D - Certification of exemption from the payment of estimated personal income tax (Tax Law, Article 22, section 663)

Complete the following only if a fee simple interest or a cooperative unit is being transferred by an individual or estate or trust.

If the property is being conveyed by a referee pursuant to a foreclosure proceeding, proceed to Part II, and check the second box under *Exemptions for nonresident transferor(s)/seller(s)* and sign at bottom.

Part I - New York State residents

If you are a New York State resident transferor(s)/seller(s) listed in Schedule A of Form TP-584 (or an attachment to Form TP-584), you must sign the certification below. If one or more transferors/sellers of the real property or cooperative unit is a resident of New York State, **each** resident transferor/seller must sign in the space provided. If more space is needed, please photocopy this Schedule D and submit as many schedules as necessary to accommodate all resident transferors/sellers.

Certification of resident transferor(s)/seller(s)

This is to certify that at the time of the sale or transfer of the real property or cooperative unit, the transferor(s)/seller(s) as signed below was a resident of New York State, and therefore is not required to pay estimated personal income tax under Tax Law, section 663(a) upon the sale or transfer of this real property or cooperative unit.

Signature	Print full name	Date
Signature	Print full name	Date
Signature	Print full name	Date
Signature	Print full name	Date

Note: A resident of New York State may still be required to pay estimated tax under Tax Law, section 685(c), but not as a condition of recording a deed.

Part II - Nonresidents of New York State

If you are a nonresident of New York State listed as a transferor/seller in Schedule A of Form TP-584 (or an attachment to Form TP-584) but are not required to pay estimated personal income tax because one of the exemptions below applies under Tax Law, section 663(c), check the box of the appropriate exemption below. If any one of the exemptions below applies to the transferor(s)/seller(s), that transferor(s)/seller(s) is not required to pay estimated personal income tax to New York State under Tax Law, section 663. **Each** nonresident transferor/seller who qualifies under one of the exemptions below must sign in the space provided. If more space is needed, please photocopy this Schedule D and submit as many schedules as necessary to accommodate all nonresident transferors/sellers.

If none of these exemption statements apply, you must complete Form IT-2663, *Nonresident Real Property Estimated Income Tax Payment Form*, or Form IT-2664, *Nonresident Cooperative Unit Estimated Income Tax Payment Form.* For more information, see *Payment of estimated personal income tax,* on page 1 of Form TP-584-I.

Exemption for nonresident transferor(s)/seller(s)

This is to certify that at the time of the sale or transfer of the real property or cooperative unit, the transferor(s)/seller(s) (grantor) of this real property or cooperative unit was a nonresident of New York State, but is not required to pay estimated personal income tax under Tax Law, section 663 due to one of the following exemptions:

☐ The real property or cooperative unit being sold or transferred qualifies in total as the transferor's/seller's principal residence (within the meaning of Internal Revenue Code, section 121) from _____ to _____ *(see instructions).*
Date Date

☐ The transferor/seller is a mortgagor conveying the mortgaged property to a mortgagee in foreclosure, or in lieu of foreclosure with no additional consideration.

☐ The transferor or transferee is an agency or authority of the United States of America, an agency or authority of the state of New York, the Federal National Mortgage Association, the Federal Home Loan Mortgage Corporation, the Government National Mortgage Association, or a private mortgage insurance company.

Signature	Print full name	Date
Signature	Print full name	Date
Signature	Print full name	Date
Signature	Print full name	Date

DOCUMENT NUMBER 5

CONDOMINIUM UNIT DEED

The Law Office of Jay Lichtman, P.C.
68 Jay Street, Suite 420
Brooklyn, New York 11201

CONDOMINIUM UNIT DEED

THIS INDENTURE, made as of the ___ day of _____, 20___ by and between 1296 Park Place LLC, a New York Limited Liability Company having a business address at 1208 Avenue M # 2394, Brooklyn, NY 11230 (the "Grantor"); and _____, with an address of 1296 Park Place, Unit ___, Brooklyn, NY 11213 (hereinafter referred to as the "Grantee").

W I T N E S S E T H:

That the Grantor, in consideration of Ten Dollars ($10.00) and other good and valuable consideration paid by the Grantee, does hereby grant and release unto the Grantee, the heirs or successors and assigns of the Grantee, forever:

The Condominium Unit known as Unit No. ___ (hereinafter called "the Unit") in the building known as The 1296 Park Place Condominium, and by the street number 1296 Park Place, Borough of Brooklyn, County of Kings, City and State of New York designated and described by the above unit number in a certain declaration dated _____, made by the Grantor pursuant to Article 9-B of the Real Property Law of the State of New York ("the Condominium Act") establishing a plan for condominium ownership of the Building and the land ("Land") upon which the Building is situate (which land is more particularly described in the Schedule A annexed hereto and by this reference made a part hereof), which declaration was recorded in the County of Kings Office of the Register of The City of New York ("Register's Office") on _____, under CFRN # _____ ("Declaration"). The Unit is also designated as Tax lot ____ in Block _____ of the Borough of Brooklyn on the Tax Map of the Real Property Assessment Department of the City of New York and on the Floor Plans of the Building, certified by the architect as Condominium Plan _____.

TOGETHER with an undivided _____ % interest, in the Common Elements of the Property (hereinafter called "the Common Elements"), as defined in the Declaration.

The Property is described as follows:

SEE SCHEDULE "A"

Together with the appurtenances and all the estate and rights of the Grantor in and to the Unit;

Together with, and subject to, the rights, obligations, easements, restrictions, agreements and other provisions set forth in the Declaration and By-Laws of The 1296 Park Place Condominium, as the same may be amended from time to time (hereinafter referred to as the "By-Laws"), all of which shall constitute the covenants running with the Land, and shall bind any person having at any time, any title, interest or estate in the Unit as though recited and stipulated at length herein;

TOGETHER with an easement for the continuance of all encroachments by the Unit on any adjoining units or Common Elements now existing as a result of construction of the Building,

of which may come into existence hereafter as a result of settling or shifting of the Building, or as a result of repair or restoration of the Building or of the Unit, after damage or destruction by fire or other casualty, or any taking in condemnation or eminent domain proceeds, or by alteration or repair to the Common Elements made by or with the consent of the board of Managers, so that any such encroachment may remain as long as the units stand.

TOGETHER with an easement in common with the Owners of other Units to use any pipes, wires, ducts, cables, conduits, public utility lines, and other Common Elements located in any of the other Units or elsewhere on the Property, and serving the Unit.

Subject also to such other liens, agreements, covenants, easements, restrictions, consents and other matters of record as pertain to the Unit, the Land and/or the Building (which Land and Building are collectively referred to as "the Property");

TOGETHER with and SUBJECT to all easements of necessity in favor of the Unit or in favor of other Units or the Common Elements.

SUBJECT also to an easement in favor of the other Units to use the pipes, wires, ducts, conduits, cables, public utility lines and other Common Elements located in the Unit or elsewhere on the Property and serving such other Units.

SUBJECT to variations between tax map and lines of record title;

SUBJECT to variations between fences and walls and record lines;

SUBJECT to the provisions of the Declaration, By-Laws, and Floor Plans of the Condominium recorded simultaneously with and as part of the Declaration, as the same may be amended from time to time by instruments recorded in the Kings County Office of the Register of the City of New York, which provisions, together with any amendments thereto, shall constitute covenants running with the land and shall bind any person having at any time any interest or estate in the Unit, as though such provisions were recited and stipulated at length herein.

EXCEPT as otherwise specifically permitted by the Board of Managers of the Condominium or provided in the Declaration or in the By-Laws, the Unit is intended for residential use only.

AND the Grantor covenants that the Grantor has not done or suffered anything whereby the said premises have been encumbered in any way whatsoever, except as aforesaid and as set forth in the Declaration and the By-Laws (and any Rules and Regulations adopted under the By-Laws);

TO HAVE AND TO HOLD the same unto the Grantee, and the heirs or successors and assigns of the Grantee, forever.

If any provision of the Declaration or the By-Laws is invalid under, or would cause the Declaration or the By-Laws to be insufficient to submit the Property to, the provisions of the

Condominium Act, or if any provision that is necessary to cause the Declaration and the By-Laws to be sufficient to submit the Property to the provisions of the Condominium Act is missing from the Declaration or the By-Laws, or if the Declaration and the By-Laws are insufficient to submit the Property to the provisions of the Condominium Act, the applicable provisions of the Declaration shall control.

The Grantor, in compliance with Section "13" of the Lien Law of the State of New York, covenants that the Grantor will receive the consideration for this conveyance and will hold the right to receive such consideration as a trust fund for the purpose of paying the cost of improvements at the Property and will apply the same first to the payment of the cost of such improvements before using any part of the same for any other purposes.

The Grantee accepts and ratifies the provisions of the Declaration and the By-Laws (and any Rules and Regulations adopted under the By-Laws) and agrees to comply with all the terms and provisions thereof.

The Grantee has examined the Unit and is purchasing the same in its existing condition.

The term "Grantee" shall be read as "Grantees" whenever the sense of this indenture so requires.

This conveyance is made in the regular course of business actually conducted by the Grantor.

All capitalized terms herein which are not separately defined herein shall have the meanings given to those terms in the Declaration or in the By-Laws of The 1296 Park Place Condominium (said By-Laws, as the same may be amended from time to time, are hereinafter referred to as "the By-Laws");

IN WITNESS WHEREOF, the Grantor and the Grantee have duly executed this indenture as of the day and year first above written.

GRANTOR:
1296 Park Place LLC

GRANTEE:

By: _____

_____

STATE OF NEW YORK)
COUNTY OF KINGS) SS:

On the ____ day of _____ in the year 201__ before me, the undersigned, a notary public in and for said state, personally appeared _____, personally known to me or proved to me on the basis of satisfactory evidence to be the individual(s) whose name(s) is (are) subscribed to the within instrument and acknowledged to me that he/she/they executed the same in his/her/their capacity(ies), and that by his/her/their signature(s) on the instrument, the individual(s) acted, executed the instrument.

_____
Notary Public

STATE OF NEW YORK)
COUNTY OF KINGS) SS:

On the ____ day of _____ in the year 201__ before me, the undersigned, a notary public in and for said state, personally appeared _____, personally known to me or proved to me on the basis of satisfactory evidence to be the individual(s) whose name(s) is (are) subscribed to the within instrument and acknowledged to me that he/she/they executed the same in his/her/their capacity(ies), and that by his/her/their signature(s) on the instrument, the individual(s) acted, executed the instrument.

_____
Notary Public

SCHEDULE A

DESCRIPTION OF THE UNIT

The Condominium Unit (hereinafter referred to as the "Unit") known as Unit No. __ in the building (hereinafter referred to as the "Building") known as The 1296 Park Place Condominium and by the street number 1296 Park Place, Borough of Brooklyn, County of Kings, City and State of New York, said Unit being designated and described as Unit No. __ in a certain declaration dated _____ made pursuant to Article 9-B of the Real Property Law of the State of New York (hereinafter referred to as the "Condominium Act"), establishing a plan for condominium ownership of the Building and the land (hereinafter referred to as the "Property") upon which the Building is situate (which Land is more particularly described in this Schedule A and by this reference made a part hereof), which declaration was recorded in the Kings County office of the Register of The City of New York as Condominium Plan No. ___ on _____ as Document ID No. _____, City Register File No. _____, together with Map No. ____. This Unit is also designated as Tax Lot ___ in Block ___ in the Borough of Brooklyn on the Tax Map of the Real Property Assessment Department of The City of New York and on the Floor Plans of the Building, certified by _____, [R.A.][P.E.], and filed with the Real Property Assessment Department of The City of New York as Condominium No. ____.

TOGETHER with an undivided _____% interest in the Common Elements (as such term is defined in the Declaration) and situated on the land described as follows:

DESCRIPTION OF THE LAND

BEGINNING at a point on the southerly side of St. John's Place, 240 feet easterly from the corner formed by the intersection of the southerly side of St. John's Place with the easterly side of Nostrand Avenue;

BEGINNING at a point on the southerly side of Park Place distant 220 feet westerly from the corner formed by the intersection of the southerly side of Park Place with the westerly side of Schenectady Avenue;

RUNNING THENCE Southerly parallel with Schenectady Avenue and part of the distance through a party wall 147 feet 3-5/8 inches to the center of Ramsen Avenue as same is laid down on map of Jeremia Ramsen filed in the Register's Office of Kings County as map #344;

THENCE Southwesterly along the center line of Ramsen Avenue 20 feet 6-1/2 inches;

THENCE Northerly parallel with Schenectady Avenue and part of the distance through a party wall 151 feet 11-5/8 inches to the southerly side of Park Place 20 feet to the point or place of BEGINNING.

NOTE: Address, Block & Lot shown for informational purposes only

CONDOMINIUM UNIT DEED

GRANTOR:

1296 Park Place LLC

GRANTEE:

_____

Premises:

1296 Park Place, Unit ___
Brooklyn, NY 11213

County: Kings

Section:

Block: ____

Lot: ____

Record and return to:

_____

_____

DOCUMENT NUMBER 6

DECLARATION OF CONDOMINIUM

The Law Office of Jay Lichtman, P.C.
68 Jay Street, Suite 420
Brooklyn, New York 11201

DECLARATION

Establishing a Plan for Condominium Ownership of the Premises known as

1296 Park Place
Brooklyn, New York 11213

Pursuant to Article 9-B of the Real Property Law of the State of New York

Name:

THE 1296 PARK PLACE CONDOMINIUM

Declarant:

1296 Park Place PH LLC
1208 Avenue M # 2394
Brooklyn, New York 11230

Date of Declaration:

_____

Record & return to:

The Law Office of Jay Lichtman P.C.
68 Jay Street, Suite 420
Brooklyn, New York 11201
(347) 504-1724

The land affected by the within instrument lies in Block _____
formerly known as Lot ____ and now known as Lots _____-_____
on the Tax Map of the Borough of Brooklyn, City and State of New York

TABLE OF CONTENTS

Article 1 Definitions 1
Article 2 Submission of the Property 1
Article 3 Description of the Land 1
Article 4 Description of the Building 1
Article 5 Name of the Condominium 1
Article 6 The Units 1
Article 7 The Common Elements 2
Article 8 Determination of Common Interests 3
Article 9 Use of Units 3
Article 10 Easements for the Enjoyment of Common Elements 4
Article 11 Other Easements 4
Article 12 Alterations, Addition, Improvements and Changes to Units 5
Article 13 Acquisition of Units by the Condominium Board 6
Article 14 Power of Attorney to the Condominium Board 6
Article 15 Termination of Condominium 7
Article 16 Covenant of Further Assurances 7
Article 17 Covenants to Run with the Land 8
Article 18 Amendments to this Declaration 9
Article 19 Consents of Sponsor 9
Article 20 Person to Receive Service 10
Article 21 Incorporation by Reference 10
Article 22 Waiver 10
Article 23 Severability 10
Article 24 Gender 10
Article 25 Captions 11
EXHIBIT A DESCRIPTION OF PROPERTY 14
EXHIBIT B DESCRIPTION OF UNITS 15
EXHIBIT C DEFINITIONS 16
EXHIBIT D BY-LAWS ..... *

* Reproduced in full in as Exhibit D

DECLARATION

OF

THE 1296 PARK PLACE CONDOMINIUM

Pursuant to Article 9-B of the Real Property Law of the State of New York

1296 Park Place PH LLC, with an address at 1208 Avenue M # 2394, Brooklyn, NY 11230 (the "Declarant"), hereby declares as follows:

Article 1 Definitions

All capitalized terms used in this Declaration that are not otherwise defined in the Articles hereof shall have the meanings set forth in Exhibit C annexed hereto, unless the context in which the same are used shall otherwise require. All capitalized terms used in this Declaration that are defined in any of the Articles hereof shall have the meanings ascribed to them in such Articles, unless the context in which the same are used shall otherwise require. Each of the said capitalized terms shall be applicable to singular and to plural nouns, as well as to verbs of any tense.

Article 2 Submission of the Property

The Declarant hereby submits the land (the "Land") hereinafter described, together with the building and improvements thereon erected (the "Building") owned by the Declarant in fee simple absolute (the Land and Building being hereinafter referred to collectively as the "Property"), to the provisions of Article 9-B of the Real Property Law of the State of New York (the "Condominium Act").

Article 3 Description of the Land

The land is located in the Borough of Brooklyn, County of Kings, in the City and State of New York, and is designated on the Tax Map of Kings County as Block ____ formerly known as Lots __ and being designated herein as Lots ____-____. See Exhibit A attached hereto for a metes and bounds description of the land.

Article 4 Description of the Building

The newly renovated building consists of four (3) stories with a mezzanine and a cellar and contains eight (8) residential Units. The building does not have an elevator. The principal materials of which it is constructed are block, brick, wood and steel.

Article 5 Name of the Condominium

The Condominium shall be known as The 1296 Park Place Condominium.

Article 6 The Units

(a) Exhibit B annexed hereto sets forth the following data with respect to each Unit necessary for the proper identification thereof: (i) its designation number; (ii) its tax lot number; (iii) its approximate location in the Building; (iv) its approximate area; (v) the number of rooms contained therein; (vi) the portions of the Common Elements to which such Unit has immediate access; and (vii) the Common Interest appurtenant to such Unit. The precise location and areas of each Unit within the Building and all of the areas and installations which are included as part of the Units are shown on the Floor Plans of the Building, certified by the architect, intended to be filed in the Office of the City Register simultaneously with the recording of this Declaration and are made a part of this Declaration. The Floor Plans shall govern in the event of any inconsistency between the written part of the Declaration and the Floor Plans.

(b) Statement of Dimensions. Each Unit consists of the area measured horizontally from the outside face of the glass window and/or exterior walls to the center line of the partitions separating one Unit from another Unit or to the exterior line of the partitions separating a Unit from corridors, stairs, elevators and other mechanical equipment spaces that are not a part of the Unit. Each Unit consists of the area measured vertically from the top of the floor to the underside of the ceiling. The dimensions and arrangements may vary as referred to in the Offering Plan. All dimensions are approximate. Any common elements within any Unit shall not be considered as part of this Unit.

No Unit Owner shall be deemed to own the structural walls, supporting columns, pipes, wires, conduits or other public lines running through the Unit which are utilized for or serve more than one (1) Unit. Any area or installation which is designated on the Floor Plans as part of a Unit shall be considered as part of said Unit. Vertically, each unit consists of the space between the upper face of the subfloor and the upper face of the dry wall ceiling.

(c) Notwithstanding anything contained in this Article 6 to the contrary, each Unit Owner shall have the right, exercisable at any time and from time to time, to install, at such Unit Owner's sole cost and expense, such decorations, fixtures and coverings (including, without limitation, painting, finishing, wall papering, carpeting, pictures, mirrors, shelving and lighting fixtures) on the surfaces of the walls, ceilings and floors that face the interior of such Unit Owner's Unit and to a depth of one inch behind such surfaces for the purposes of installing nails, screws, bolts and the like, provided that no such installation shall impair the structural integrity of such Unit or of the Building.

Article 7 The Common Elements

A. Common Elements. The Common Elements generally consist of the Land and those rooms, areas and corridors and other portions of the Building (other than the Units), as well as those Facilities therein, either currently or hereafter existing for the common use of the Units or of the Unit Owners or necessary for, or convenient to, the existence, maintenance, management, operation, or safety of the Property. Without intention to limit the generality of the foregoing in any respect, and unless otherwise provided for in the Floor Plans, Common Elements include the following:

(i) The Land not specifically designated to any of the Condominium Units on the Floor

Plans.

(ii) all foundations, columns, beams, supports, girders, exterior walls, interior walls, partitions, floors, roofs and ceilings in, on or under the Building, to the extent that the same are not expressly included as a part of a Unit pursuant to the terms of Article 6 hereof;

(iii) all vestibules, stairs, elevators, mechanical and electrical equipment spaces, to the extent that the same are not expressly included as a part of a Unit pursuant to the terms of Article 6 hereof;

(iv) All central and appurtenant installations and facilities for services such as power, light, telephone, gas, sewer, plumbing, drainage, hot and cold-water distribution, ventilation, garbage disposal, and other mechanical and electrical systems to the extent that the same are not expressly included as a part of a Unit pursuant to the terms of Article 6 hereof, if any.

(v) All sewer and drainage pipes.

(vi) All other parts of the Property and all apparatus and installations existing in the Buildings or Premises for common use of the Unit Owners or which are, or may be necessary or convenient for the existence, maintenance or safety of the Buildings.

B. Limited Common Elements.

(i) The Limited Common Elements in this Condominium are the rear yard, areaway, stairs, balconies and terrace, allocated to the Units as shown on the Floor Plans.

(ii) The Unit Owner's or Owners' right to make alterations, additions or improvements to the Limited Common Elements shall be subject to the provisions of Article 9 of this Declaration, which shall also govern alterations, additions, or improvements allocated to the Units.

C. The Common Elements shall remain undivided and are not subject to partition nor are they severable from the Units except in accordance with The Condominium Act (Article 9-B of the Real Property Law), or as expressly permitted pursuant to the terms of Section 5.5 of the By-Laws.

Article 8 Determination of Common Interests

In accordance with Section 339-i (1) (iv) of the New York State Condominium Act, the Common Interests of each of the Units have been allocated based upon floor space, subject to the location of such space and the additional factors of relative value to other space in the condominium, the uniqueness of the unit, the availability of common elements for exclusive or shared use, and the overall dimensions of the particular unit.

Article 9 Use of Units

As more particularly set forth in the By-Laws, each Unit may be used in accordance with the use permitted by local law and zoning regulations and the Certificate of Occupancy, and not

more than one family may occupy a Unit at one time. A Unit owned or leased by an individual, corporation, partnership, fiduciary, or any other entity may be occupied only by said individual, or by an officer, director, stockholder, or employee of such corporation, or by a partner or employee of such partnership, or by said fiduciary (including directors, officers, stockholders, or employees of corporate fiduciaries and partners or employees of partnership fiduciaries), or by the beneficiary of said fiduciary, or by a principal or employee of such other entity, respectively, or by Family Members or guests of any of the foregoing (and nothing contained in this sentence shall be deemed to prohibit the exclusive occupancy of any Unit by such Family Members or guests).

Article 10 Easements for the Enjoyment of Common Elements

Subject to the terms of the By-Laws and the Rules and Regulations, Sponsor, the Unit Owners, the Selling Agent, the Managing Agent, the Condominium Board and all officers, partners, employees, agents, guests, invitees and licensees of the foregoing shall have, in common with all of the others, an easement for ingress and egress through, as well as for the use and enjoyment of, all of the Common Elements, and the Common Elements shall be subject to such easement. Notwithstanding the foregoing, however, no Person shall use or enjoy the Common Elements except in accordance with the reasonable purposes for which they are intended and without encroaching upon the rights of other Persons to do so.

Article 11 Other Easements

(a) Subject to the terms of the By-Laws and to the Rules and Regulations, each Unit Owner shall have, in common with all other Unit Owners, an easement to use any of the Common Elements, and all pipes, wires, ducts, cables, conduits, public utility lines and all other utility distribution systems, whether or not Common Elements, located in, over, under, through, adjacent to, or upon any other Unit or the Common Elements to the extent that such Common Element and utility distribution system serves, or is necessary to the service of, his or her Unit, and each Unit and all of the Common Elements shall be subject to such easement. In addition, each Unit Owner shall have a reasonable right of access through any other Unit for the purpose of entry to any part of his Unit where there is no other means of access to such part of his Unit or Limited Common Elements allocated to his Unit. In addition, the Condominium Board shall have an easement and a right of access to each Unit and to the Common Elements to inspect the same, to remove violations therefrom and to install, operate, maintain, repair, alter, rebuild, restore and replace any of the Common Elements located in, over, under, through, adjacent to, or upon the same, and each Unit and the Common Elements shall be subject to such easement and right of access. The easements and the rights of access granted in this paragraph shall be exercised in such a manner as will not unreasonably interfere with the use of the Units for their permitted purposes. Such entry shall be permitted only upon reasonable notice, except that no such notice shall be necessary in the event of repairs or replacements immediately necessary or required for the preservation or safety of the Building, for the safety of the occupants of the Building or other persons, or to avoid the suspension of any necessary service in the Building. Each of the units may maintain or replace its porches or balconies.

(b) The Condominium Board shall have, on behalf of all Unit Owners, the right to grant such additional electric, gas, steam, cable television, telephone, water, storm drainage, sewer and other

utility easements in, or to relocate any existing utility easements to, any portion of the Property as the Condominium Board shall deem necessary or desirable for the proper operation and maintenance of the Building or any portion thereof or for the general health or welfare of the owners, tenants and occupants of the appropriate Units; provided, however, that the grant of such additional utility easements, or the relocation of existing utility easements, shall not unreasonably interfere with the use of the Units for their permitted purposes. Any utility company, as well as its officers, employees and agent, shall have the right of access to each Unit and to the Common Elements in furtherance of such easement. However, such right of access shall be exercised in such a manner as will not unreasonably interfere with the use of the Units for their permitted purposes.

(c) Each unit and the Common Elements shall have easements of subjacent support and necessity, and the same shall be subject to such easements in favor of all of the other Units and the Common Elements.

(d) If (i) any portion of the Common Elements now encroaches upon any Unit or upon any other portion of the Common Elements, (ii) any Unit now encroaches upon any other Unit or upon any portion of the Common Elements, or (iii) any such encroachment shall hereafter occur as a result of (x) the settling or shifting of the Building, (y) any repair or alteration made to the Common Elements in accordance with the terms of this Declaration and the By-Laws, by, or with the consent of, the Condominium Board, or (z) any repair or restoration made to the Building or any portion thereof, to any Unit, or to the Common Elements in accordance with the terms of this Declaration and the By-Laws after damage by fire or other casualty or after any taking by condemnation or eminent domain proceedings, then, in any such event, a valid easement shall exist for such encroachment and for the maintenance of the same for so long as the Building or the affected Unit or Common Elements shall stand.

(e) In addition, a right of access is hereby granted to the unit owners, their successors, heirs and assigns, for the purpose of gaining access to the following areas: common areas; mechanical areas of the building, including but not limited to the boiler room, storage room, meter room or any other facility to which each such unit owner has a right of use; or to any area of the property that such Unit Owner has a right to use as part of his Unit or as a Common Element. However, the right shall only be exercised in a reasonable manner.

(f) In addition to the specific easements set forth in this Article 11 and in Article 10 hereof, the Property and every portion thereof shall be subject to all easements and rights of access prescribed in the Condominium Act.

Article 12 Alterations, Addition, Improvements and Changes to Units

Each Unit Owner shall have the right to:

(i) make alterations, additions, or improvements in the interior of his unit;

(ii) make alterations, additions, or improvements in the interior of to any part of the property allocated to his unit;

(iii) change the layout of his unit;

provided, however, that, with respect to any such alteration, addition, improvement or change in, to, of or upon a Unit:

(1) no physical modification shall be made to any other Unit, and the Common Interest or interior dimensions of any other Unit shall not be changed by reason thereof, unless the owner of such other affected Unit shall consent thereto;

(2) the Unit Owner shall agree to hold the Condominium Board and all other Unit Owners harmless from any liability arising therefrom; and

(3) such alteration, addition, improvement or change shall not jeopardize the soundness or structural integrity of any part of the Building or the safety of any tenant or other persons at the Property.

In the event that any unit is subdivided, the subdivided units shall jointly exercise and share the vote and the percentage of common interest allocated to the original unit. The Declarant has accepted the present use and construction of the building "as is".

Article 13 Acquisition of Units by the Condominium Board

If (i) any Unit Owner surrenders his or her Unit, together with its Appurtenant Interests, to the Condominium Board pursuant to the terms of the By-Laws or of Section 339-x of the Condominium Act or (ii) the Condominium Board, pursuant to the terms of the By-Laws or otherwise, either (x) acquires or leases a Unit, together with its Appurtenant Interests or (y) purchases a Unit, together with its Appurtenant Interests, at a foreclosure or other similar sale, then, in any such event, title or the leasehold estate, as the case may be, and to such Unit and such Appurtenant Interests shall be held by the Condominium Board or its designee, corporate or otherwise, on behalf of all Unit Owners, in proportion to their respective Common Interests. Any lease or sublease of any Unit leased or subleased by the Condominium Board or its designee shall be held by the Condominium Board or such designee, corporate or otherwise, on behalf of all Unit Owners, in proportion to their respective Common Interests.

Article 14 Power of Attorney to the Condominium Board

(a) Each Unit Owner, by acceptance of a deed or otherwise succeeding to title to a Unit, shall be deemed to have irrevocably nominated, constituted and appointed as such Unit Owner's attorney-in-fact, coupled with an interest and with power of substitution, the Persons who shall from time to time constitute the Condominium Board, jointly, to:

(i) acquire or lease any Unit, together with its Appurtenant Interests, (1) whose owner desires to sell, convey, transfer, assign, lease, or surrender the same or (2) that becomes the subject of a foreclosure or other similar sale, in the name of the Condominium Board or its designee, corporate or otherwise, on behalf of all Unit Owners;

(ii) convey, sell, lease, mortgage, or otherwise deal with (but not to exercise the vote appurtenant to) any Unit so acquired or to sublease any Unit so leased; and

(iii) execute, acknowledge and deliver (1) any declaration or other instrument affecting the Condominium that the Condominium Board deems necessary or appropriate to comply with any Law applicable to the maintenance, demolition, construction, alteration, repair, or restoration of the Condominium or (2) any consent, covenant, restriction, easement, or declaration, or any amendment thereto, affecting the Condominium or the Common Elements that the Condominium Board deems necessary or appropriate.

(b) In confirmation of the foregoing power of attorney, each Unit Owner, upon the request of the Condominium Board, shall duly execute, acknowledge and deliver to the requesting party, for recording in the Register's Office, a Unit Owner's Power of Attorney in the form provided in the Plan.

Article 15 Termination of Condominium

The Condominium shall continue until terminated by (i) casualty loss, condemnation, or eminent domain, as more particularly provided in the By-Laws or (ii) withdrawal of the Property from the provisions of the Condominium Act by at least eighty percent (80%) of the vote. In the event that said withdrawal is authorized as aforesaid, but only in such event, the Property shall be subject to an action for partition by any Unit Owner or lienor as if owned in common, in which event the net proceeds of sale shall be divided among all Unit Owners in accordance with the factors set out in The New York State Condominium Act Section 339-i(1)(iv), which is based on floor space, subject to the location of such space and the additional factors of relative value to other space in the Condominium, the uniqueness of the unit, the availability of common elements for exclusive or shared use, the overall dimensions of the particular unit and the fair market value of such unit. In the event of any dispute, the issue shall be presented for arbitration in accordance with Article 10 of the By-Laws. No payment shall be made to a Unit Owner until there has first been paid, out of his or her share of such funds, such amounts as may be necessary to discharge all unpaid liens on his or her Unit (other than mortgages that are not Permitted Mortgages) in the order of the priority of such liens.

Article 16 Covenant of Further Assurances

(a) Any Person who is subject to the terms of this Declaration, whether such Person is a Unit Owner, a lessee or a sublessee of a Unit Owner, an occupant of a Unit, a member of the Condominium Board, an officer of the Condominium, or otherwise, shall, at the expense of any such other Person requesting the same, execute, acknowledge and deliver to such other Person such instruments, in addition to those specifically provided for herein, and take such other action, as such other Person may reasonably request to effectuate the provisions of this Declaration or of any transaction contemplated herein or to confirm or perfect any right to be created or transferred hereunder or pursuant to any such transaction.

(b) If any Unit Owner or any other person who is subject to the terms of this Declaration fails or refuses to execute, acknowledge, or deliver any instrument, or fails or refuses, within ten (10)

days after request therefor, to take any action that such Unit Owner or Person is required to take pursuant to this Declaration, then the Condominium Board is hereby authorized as attorney-in-fact for such Unit Owner or other Person, which power shall be deemed to be coupled with an interest, to execute, acknowledge and deliver such instrument, or to take such action, in the name of such Unit Owner or other Person, and such document or action shall be binding on such Unit Owner or other Person.

(c) If any Unit Owner or the Condominium Board or any other Person who is subject to the terms of this Declaration fails or refuses to execute, acknowledge, or deliver any instrument, or fails or refuses, within ten (10) days after request therefor, to take any action that the Condominium Board, Unit Owner, or other Person is required to take pursuant to this Declaration at the request of the Managing Agent, then the Managing Agent is hereby authorized as attorney-in-fact for the Condominium Board, such Unit Owner, or other Person, which power shall be deemed to be coupled with an interest, to execute, acknowledge and deliver such instrument, or to take such action, in the name of the Condominium Board, such Unit Owner, or other Person, and such document or action shall be binding on the Condominium Board, such Unit Owner, or other Person, as the case may be.

Article 17 Covenants to Run with the Land

(a) All provisions of this Declaration, the By-Laws and the Rules and Regulations, including, without limitation, the provisions of this Article 17, shall, to the extent applicable and unless otherwise expressly herein or therein provided to the contrary, be perpetual and be construed to be covenants running with the Land and with every part thereof and interest therein, and all of the provisions thereof shall be binding upon, and shall inure to the benefit of, the owner of all or any part thereof, or interest therein, and his or her heirs, executors, administrators, legal representatives, successors and assigns, but the same are not intended to create, nor shall they be construed as creating, any rights, in, or for the benefit of, the general public. All present and future owners, tenants and occupants of Units shall be subject to, and shall comply with, the provisions of this Declaration, the By-Laws and the Rules and Regulations, as they may be amended from time to time. The acceptance of a deed or conveyance, the entering into a lease, or the entering into occupancy of any Unit shall constitute an agreement that the provisions of this Declaration, the By-Laws and the Rules and Regulations, as they may be amended from time to time, are accepted and ratified by such owner, tenant, or occupant, and all of such provisions shall be deemed and taken to be covenants running with the Land and shall bind any person having at any time, any interest or estate in such Unit, as though such provisions were recited and stipulated at length in each and every deed, conveyance, or lease.

This Declaration of Condominium is subject also to such other liens, covenants, easements, restrictions, consents, agreements, and other matters of record and any agreements as pertain to the Units, the Land and/or the Building.

(b) If any provision of this Declaration or of the By-Laws is invalid under, or would cause this Declaration and the By-Laws to be insufficient to submit the Property to, the provisions of the Condominium Act, such provision shall be deemed deleted from this Declaration or the By-Laws, as the case may be, for the purpose of submitting the Property to the provisions of the

Condominium Act, but shall nevertheless be valid and binding upon, and shall inure to the benefit of, the owners of the Property and their heirs, executors, administrators, legal representatives, successors and assigns, as covenants running with the Land and with every part thereof and interest therein under other applicable Law to the extent permitted under such applicable Law with the same force and effect as if, immediately after the recording of this Declaration and the By-Laws, all Unit Owners had signed and recorded an instrument agreeing to each such provision as a covenant running with the Land. If any provision that is necessary to cause this Declaration and the By-Laws to be sufficient to submit the Property to the provisions of the Condominium Act is missing from this Declaration or the By-Laws, then such provision shall be deemed included as part of this Declaration or the By-Laws, as the case may be for the purposes of submitting the Property to the provisions of the Condominium Act.

(c) Subject to the terms of paragraph (b) of this Article 17, if this Declaration and the By-Laws are insufficient to submit the Property to the provisions of the Condominium Act, the provisions of this Declaration and the By-Laws shall nevertheless be valid and binding upon, and shall inure to the benefit of, the owners of the Property and their heirs, executors, administrators, legal representatives, successors and assigns, as covenants running with the Land and with every part thereof and interest therein under other applicable Law to the extent permitted under such applicable law with the same force and effect as if, immediately after the recording of this Declaration and the By-Laws, all Unit Owners had signed and recorded an instrument agreeing to each such provision as a covenant running with the Land.

Article 18 Amendments to this Declaration

(a) Any provision of this Declaration may be amended, modified, added to, or deleted by a 66 2/3% vote of the Unit Owners, taken in accordance with the provisions of the By-Laws, provided, however, that no amendment shall be made which limits or affects the rights of the mortgagee against the mortgagor. No such amendment, modification, addition, or deletion shall be effective until recorded in the Kings County Register's Office. Subject to the provisions contained herein or in the By-Laws with respect to amendments, modifications, additions, or deletions affecting Sponsor or its designee or any Unsold Units, any such amendment, modification, addition, or deletion may be executed either (i) by the Condominium Board as attorney-in-fact for the Unit Owners, which power shall be deemed to be coupled with an interest as provided for in Article 12 hereof; or (ii) by the Unit Owner or Unit Owners whose Unit or Units are affected by such amendment, modification, addition or deletion.

(b) If the amendment requires the approval of a specified percentage of Unit Owners pursuant to the terms of this Declaration or the By-Laws, then there shall be attached to such amendment an original executed Secretary's Certification, certifying that the requisite number and percentage of Unit Owners approved the amendment at a duly constituted meeting or (when permitted in this Declaration or the By-Laws) in writing without a meeting, in which Certification shall be described the number and percentage of Unit Owners so consenting and (if voted upon at a meeting) the date and time of the meeting.

Article 19 Consents of Sponsor

Wherever the consent, approval, satisfaction, or permission of Sponsor or its designee is required under this Declaration or the By-Laws, such consent, approval, satisfaction, or permission shall not be required when Sponsor or such designee no longer owns any Units.

Article 20 Person to Receive Service

The Secretary of State is designated as agent of the Condominium Board upon whom process against it may be served. The post office address within or without this state to which the secretary of state shall mail a copy of any process against the Condominium Board served upon him or her is: The 1296 Park Place Condominium, 1296 Park Place, Brooklyn, New York 11213.

Article 21 Incorporation by Reference

The terms, covenants, conditions, descriptions, and other information contained in (i) the Property description annexed hereto as Exhibit A; (ii) the description of the Units annexed hereto as Exhibit B; (iii) the table of definitions annexed hereto as Exhibit C; (iv) the By-Laws annexed hereto as Exhibit D; and (v) the Floor Plans are, by this reference, each incorporated herein and made a part of this Declaration as if the same were set forth at length in the text hereof.

Article 22 Waiver

No provision contained in this Declaration shall be deemed to have been abrogated or waived by reason of any failure to enforce the same, regardless of the number of violations or breaches that may occur.

Article 23 Severability

Subject to the provisions of paragraphs (b) and (c) of Article 17 hereof, if any provision of the Condominium Documents is invalid or unenforceable as against any Person or under certain circumstances, the remainder of the Condominium Documents and the applicability of such provision to other Persons or circumstances shall not be affected thereby. Each provision of the Condominium Documents shall, except as otherwise provided herein, be valid and enforced to the fullest extent permitted by Law. Any conflict between any provision of the Condominium Documents and the Condominium Act, or any questions regarding the interpretation of any of the Condominium Documents, shall be governed by the Condominium Act.

Article 24 Gender

A reference in this Declaration to any one gender, masculine, feminine, or neuter, includes the other two, and the singular includes the plural, and vice-versa, unless the context otherwise requires.

[THE REMAINDER OF THIS PAGE INTENTIONALLY LEFT BLANK.]

Article 25 Captions

The index hereof and the captions herein inserted are included only as a matter of convenience and for reference, and in no way define, limit or describe the scope of this Declaration or the intent of any provision hereof.

IN WITNESS WHEREOF, Declarant has caused this Declaration to be executed as of the day and year first written above.

Declarant:
1296 Park Place PH LLC

By: _____

State of New York)
)
County of) ss.:

On the _____ day of _____ in the year 201__, before me, the undersigned, a notary public in and for said state, personally appeared _____, personally known to me or proved to me on the basis of satisfactory evidence to be the individual(s) whose name(s) is (are) subscribed to the within instrument and acknowledged to me that he/she/they executed the same in his/her/their capacity(ies), and that by his/her/their signature(s) on the instrument, the individual(s) acted and executed the instrument.

_____
Notary Public

EXHIBIT A

DESCRIPTION OF PROPERTY

The 1296 Park Place Condominium
1296 Park Place, Brooklyn, NY 11213
Tax Block ____ f/k/a Lot ___ n/k/a Lots _____

ALL that certain plot, piece or parcel of land, situate, lying and being in the Borough of Brooklyn, County of Kings, City and State of New York, being more particularly bounded and described as follows:

BEGINNING at a point on the southerly side of Park Place distant 220 feet westerly from the corner formed by the intersection of the southerly side of Park Place with the westerly side of Schenectady Avenue;

RUNNING THENCE Southerly parallel with Schenectady Avenue and part of the distance through a party wall 147 feet 3-5/8 inches to the center of Ramsen Avenue as same is laid down on map of Jeremia Ramsen filed in the Register's Office of Kings County as map #344;

THENCE Southwesterly along the center line of Ramsen Avenue 20 feet 6-1/2 inches;

THENCE Northerly parallel with Schenectady Avenue and part of the distance through a party wall 151 feet 11-5/8 inches to the southerly side of Park Place 20 feet to the point or place of BEGINNING.

NOTE: Address, Block & Lot shown for informational purposes only

EXHIBIT B

DESCRIPTION OF UNITS

The 1296 Park Place Condominium
1296 Park Place, Brooklyn, NY 11213
Tax Block ____ f/k/a Lot ____ n/k/a Lots _____

Unit No.	Tax Lot	Usage	% Common Interest	Bedrooms / Bathrooms
1F	-	Residential	12.22%	0/1.50
1R	-	Residential	17.06%	1/1.50
2F	-	Residential	11.40%	1/1
2R	-	Residential	11.65%	1/1
3F	-	Residential	11.99%	1/1
3R	-	Residential	9.40%	1/1
4F	-	Residential	17.11%	3/2
4R	-	Residential	9.17%	1/1

AREAS OF UNITS (sf)

			Limited Common Area				
Unit	Location	Floor Area	Rear Yard	Balcony	Terrace	Stairs	Areaway
1F	Cellar First Floor	580* 545					
1R	Cellar First Floor	689* 688	559				173
2F	Second Floor	755					
2R	Second Floor	617	697			49	
3F	Third Floor	796					
3R	Third Floor	613					
4F	Fourth Floor Mezzanine	796 465			334		
4R	Fourth Floor	613		38			

EXHIBIT C

DEFINITIONS

The 1296 Park Place Condominium
1296 Park Place, Brooklyn, NY 11216
Tax Block ____ f/k/a Lot ___ n/k/a Lots _____

1. "Appurtenant Interest" shall mean, with respect to any Unit, the undivided interest of the owner thereof, pursuant to the terms of Section 339-x of the Condominium Act, in and to: (i) the Common Elements; (ii) any other Units owned or leased at the time in question by the Condominium Board or its designees, corporate or otherwise, on behalf of all Unit Owners; (iii) any proceeds of the sale or lease of Unit of the nature described in subdivision (ii) above; and (iv) any other assets of the Condominium.

2. "Balcony", "terrace", "porch", or "patio" generally defines an area adjoining a building at various levels of the building which is generally used by the adjoining Unit. The characterization of the above for the purposes of the Zoning Resolution is based on its location and description as set forth in the Floor Plans.

3. "Building" shall mean the building situated on the Land which is described in Exhibit A hereto.

4. "By-Laws" shall mean the by-laws of the Condominium, which are annexed as Exhibit D to the Declaration, as the same may be amended from time to time pursuant to the terms thereof.

5. "Common Elements" shall mean those certain portions of the Land and the Building (other than the Units), as well as those Facilities therein, either existing for the common use of the Units or the Unit Owners or necessary for, or convenient to, the existence, maintenance, or safety of the Property, as more particularly described in Article 7 of the Declaration.

6. "Common Charges" shall mean the charges allocated and assessed by the Condominium Board to the Unit Owners, pro-rata in accordance with their respective Common Interests (except as otherwise provided in the Declaration or the By-Laws), to meet the Common Expenses.

7. "Common Expenses" shall mean all costs and expenses to be incurred generally by the Unit Owners pursuant to the Declaration and/or the By-Laws in connection with: (i) the repair, maintenance, replacement, restoration and operation of, and any alteration, addition, or improvement to, the Common Elements; (ii) the establishment and/or maintenance of a general operating reserve or a reserve fund for working capital, for replacements with respect to the Common Elements, or to make up any deficit in the Common Charges for any prior year(s); (iii) the purchase, lease, or sublease by the Condominium Board or its designee, corporate or otherwise, on behalf of all Unit Owners, of any Unit whose owner has elected to sell, lease, transfer, or convey the same or that is to be sold at a foreclosure or other sale; and (iv) generally, the conduct of the affairs of the Condominium.

8. "Common Interest" shall mean the undivided percentage interest of each Unit in the Common

Elements.

9. "Condominium" shall mean The 1296 Park Place Condominium which was established pursuant to the terms of the Declaration and is to be governed pursuant to the terms of the By-Laws.

10. "Condominium Act" shall mean Article 9-B of the Real Property Law of the State of New York, as the same may be amended from time to time.

11. "Condominium Board" shall mean the governing body of the Condominium, whose members shall be selected pursuant to the terms of Articles 2 and 4 of the By-Laws.

12. "Condominium Documents" shall mean the Declaration, the By-Laws and Rules and Regulations.

13. "Declaration" shall mean the declaration executed by Declarant for the purposes of submitting the Property to the provisions of the Condominium Act and establishing a regime for the condominium ownership of the property.

14. "Family Members" shall mean the spouse, children (natural and adopted), stepchildren, grandchildren, siblings, parents, parents-in-law and grandparents of a Unit Owner who reside in such Unit Owner's Unit.

15. "Floor Plans" shall mean the floor plans of the Units filed in the Register's Office simultaneously with the recording of the Declaration, together with any supplemental floor plans thereto. The Floor Plans shall govern in the event of any inconsistency between the written part of the Declaration and the Floor Plans.

16. "Institutional Lender" shall mean (i) a savings bank, savings and loan associations, bank or trust company, insurance company, real estate investment trust, or mortgage trust or (ii) a federal, state, municipal, teacher's or union employee, welfare, pension or retirement fund or system.

17. "Institutional Mortgage" shall mean any first mortgage covering one or more Units that is a Permitted Mortgage and the initial holder of which is either Sponsor or its designee or an Institutional Lender.

18. "Insurance Trustee" shall mean an individual who is a resident of the State of New York, or a bank or trust company having an office in The City of New York, from time to time appointed to serve as such by the Condominium Board.

19. "Land" shall mean all that certain tract, plot, piece, and parcel of land situate, lying and being in the County of Kings, City and State of New York, as more particularly described in Exhibit A to the Declaration.

20. "Law" shall mean the laws and ordinances of any or all of the Federal, New York State, New

York City, in the particular County, and Borough governments, the rules, regulations, orders and directives of any or all departments, subdivisions, bureaus, agencies, or offices thereof or of any other governmental, public, or quasi-public authorities having jurisdiction over the Property and/or the Condominium, and/or the direction of any public officer pursuant to law.

21. "Limited Common Elements": Limited Common Elements generally are those Common Elements reserved for use and enjoyment by one or more Units.

22. "Managing Agent" shall mean a Person employed by the Condominium Board pursuant to pursuant to paragraph (C) of Section 2.6 of the By-Laws, who shall undertake to perform the duties and services that the Condominium Board shall direct and who shall have whatever powers the Condominium Board shall delegate, subject to the limitations contained in paragraph (D) of Section 2.6 of the By-Laws.

23. "Majority of Unit Owners" shall mean those Unit Owners having more than 50% of the total authorized votes of all Unit Owners (determined in accordance with the terms of Section 4.8 of the By-Laws) who are present, in person or by proxy, and voting at any duly constituted meeting of the Unit Owners at which a quorum is present.

24. "Permitted First Mortgage" shall mean a Permitted Mortgage that is a first mortgage lien against a Unit.

25. "Permitted First Mortgagee" shall mean any holder of a Permitted First Mortgage.

26. "Permitted Mortgage" shall mean any mortgage covering one or more Units that is placed thereon in compliance with the terms contained in Article 8 of the By-Laws.

27. "Permitted Mortgagee" shall mean any holder of a Permitted Mortgage at the time in question.

28. "Person" shall mean any natural person, partnership, corporation, trust, estate, fiduciary, unincorporated association, syndicate, joint venture, organization, government or any department or agency thereof, or any other entity.

29. "Plan" shall mean that certain offering plan to convert the Property to condominium ownership filed with the Department of Law of the State of New York pursuant to Section 352-e of the General Business Law of the State of New York.

30. "Property" shall mean the Land, the Building, all other improvements erected or to be erected on the Land, all easements, rights and appurtenances pertaining thereto and all other property, real, personal, or mixed, used or intended to be used in connection therewith.

31. "Register's Office" shall mean the Office of the Register of the City of New York, Kings County.

32. "Rules and Regulations" shall mean the rules and regulations of the Condominium, which are annexed as an addendum to the By-Laws, as any of the same may be amended, modified, added

to, or deleted from time to time pursuant to the terms of the By-Laws, provided that they are not in conflict with the terms of the Condominium Act, the Declaration, or the By-Laws.

33. "Special Assessments" shall mean the charges allocated and assessed by the Condominium Board to the Unit Owners, pro-rata in accordance with their respective Common Interests (except as otherwise provided in the Declaration or in the By-Laws), in accordance with paragraph (C) of Section 6.1 of the By-Laws.

34. "Sponsor" As used in New York State regulations pertaining to newly constructed and vacant condominium, the word "sponsor" means "any person, partnership, joint venture, corporation, company, trust, association or other entity or agent thereof who makes or takes part in a public offering or sale in or from the State of New York of participation interests or investments in real estate including condominium interests in realty."

35. "Sponsor's Initial Control". The Sponsor will control the board of managers whenever the unsold units constitute less than twenty five percent (25%) of the common interests.

36. "Unit" shall mean any of the "Units" as such term is defined in the Condominium Act, located in the Building, which units are more particularly described in Article 6 of, and Exhibit B to, the Declaration and in the Floor Plans.

37. "Unit Owner" shall mean any Person who holds fee title, of record, to one or more Units at the time in question.

38. "Unsold Units". This term shall only apply in the situation where there is a Sponsor that offers units for sale and shall mean any Unsold Unit owned by Sponsor or its designee at the time in question. It shall not apply to any unit occupied by the Sponsor or any member of his family.

DECLARATION OF CONDOMINIUM

Declarant:

1296 Park Place PH LLC
1208 Avenue M # 2394
Brooklyn, New York 11230

Premises:

The 1296 Park Place Condominium
1296 Park Place
Brooklyn, New York

County: Kings

Block: _____

F/K/A Lot: _____

N/K/A Lots: _____

Record and return to:

THE LAW OFFICE OF JAY LICHTMAN P.C.
68 Jay Street, Suite 420
Brooklyn, New York 11201
(347) 504-1724

DOCUMENT NUMBER 7

CONDOMINIUM BY-LAWS

The Law Office of Jay Lichtman, P.C.
68 Jay Street, Suite 420
Brooklyn, New York 11201

EXHIBIT D

TO THE DECLARATION OF

THE CONDOMINIUM

1296 Park Place
Brooklyn, NY 11213

BY-LAWS

of

THE 1296 Park Place CONDOMINIUM

1296 Park Place
Brooklyn, New York

The Law Office of Jay Lichtman P.C.
68 Jay Street, Suite 420
Brooklyn, New York 11201

TABLE OF CONTENTS

ARTICLE 1 GENERAL 1
Section 1.1. Purpose. 1
Section 1.2. Definitions. 1
Section 1.3. Applicability of By-Laws. 1
Section 1.4. Application of By-Laws. 1
Section 1.5. Principal Office of the Condominium. 1
ARTICLE 2 BOARD OF MANAGERS 1
Section 2.1. General. 1
Section 2.2. Status of the Condominium Board. 2
Section 2.3. Principal Office of the Condominium Board. 2
Section 2.4. Powers and Duties of the Condominium Board. 2
Section 2.5. INTENTIONALLY OMITTED. 5
Section 2.6. Exercise and Delegation of Powers and Duties. 5
Section 2.7. Number, Election and Qualification of Members 6
Section 2.8. Term of Office of Members. 9
Section 2.9. Resignation of Members. 9
Section 2.10. Vacancies. 9
Section 2.11. INTENTIONALLY OMITTED. 9
Section 2.12. Regular Meetings of the Condominium Board. 9
Section 2.13. Special Meetings of the Condominium Board. 9
Section 2.14. Waiver of Notice of Meetings. 10
Section 2.15. Quorum of the Condominium Board. 10
Section 2.16. Conduct of Meetings. 10
Section 2.17. Decision by the Condominium Board. 10
Section 2.18. Compensation of Members. 10
Section 2.19. Common or Interested Members of the Condominium Board. 10
Section 2.20. Liability of the Condominium Board. 11
ARTICLE 3 OFFICERS 12
Section 3.1. General. 12
Section 3.2. President. 12
Section 3.3. Vice President. 12
Section 3.4. Secretary. 12
Section 3.5. Treasurer. 12
Section 3.6. Election, Term of Office and Qualifications of Officers. 12
Section 3.7. Removal and Resignation of Officers. 13
Section 3.8. Vacancies. 13
Section 3.9. Compensation of Officers. 13
Section 3.10. Liability of the Officers of the Condominium. 13
ARTICLE 4 UNIT OWNERS 14
Section 4.1. Annual Meetings of the Unit Owners. 14
Section 4.2. Special Meetings of Unit Owners. 14
Section 4.3. Place of Meetings. 14
Section 4.4. Notice of Meetings. 14

Section 4.5. Quorum of the Unit Owners. 14
Section 4.6 Conduct of Meetings. 14
Section 4.7. Order of Business. 14
Section 4.8. Voting at Meetings of Unit Owners. 15
Section 4.9. Election of Members of the Condominium Board. 15
Section 4.10. Action without a Meeting. 16
Section 4.11. Title to Units. 16
Section 4.12. Contractual Liability of Unit Owners. 16
ARTICLE 5 OPERATION OF THE PROPERTY 16
Section 5.1. Maintenance. 16
Section 5.2. Alterations, Additions, or Improvements in and to Units. 18
Section 5.3. Alterations, Additions, or Improvements to the Common Elements. 19
Section 5.4. Insurance. 20
Section 5.5. Casualty or Condemnation. 22
Section 5.6. Use of The Property. 24
Section 5.7. Use of the Units. 25
Section 5.8. Use of the Common Elements. 25
Section 5.9. Rights of Access. 25
Section 5.10. Modification of the Rules and Regulations. 26
Section 5.11. Real Estate Taxes, Water Charges and Sewer Rents. 27
Section 5.12. INTENTIONALLY OMITTED. 27
Section 5.13. Gas and Electricity. 27
Section 5.14. Utilities Serving the Common Elements. 27
Section 5.15. Vault Charges. 27
Section 5.16. Records and Audits. 27
ARTICLE 6 COMMON CHARGES 28
Section 6.1. Determination of Common Expenses and Fixing of Common Charges 28
Section 6.2. Payment of Common Charges. 29
Section 6.3. Statement of Common Charges. 30
Section 6.4. Default In Payment of Common Charges. 30
Section 6.5. Failure by Non-Occupying Owner to Make Payments on its Unit 31
ARTICLE 7 SELLING AND LEASING OF UNITS 32
Section 7.1. General. 32
Section 7.2. No Severance of Ownership. 32
Section 7.3. Payment of Common Charges. 33
Section 7.4. Power of Attorney. 33
Section 7.5. Transfers by Sale, Gifts and Devises, Etc. 33
ARTICLE 8 MORTGAGING OF UNITS 33
Section 8.1. General. 33
Section 8.2. Restrictions on Mortgaging. 33
Section 8.3. Notice of Unpaid Common Charges and Default. 34
Section 8.4. Performance by Permitted Mortgagees. 34
Section 8.5. Examination of Books. 34
Section 8.6 Additional Rights of Mortgagee. 34
ARTICLE 9 CERTAIN REMEDIES 35

Section 9.1. Self Help. 35
Section 9.2. Abatement and Enjoinment 36
Section 9.3. Remedies Cumulative. 36
Section 9.4. Costs and Expenses. 36
ARTICLE 10 ARBITRATION 36
Section 10.1. Procedure. 36
Section 10.2. Variation by Agreement. 37
Section 10.3. Binding Effect. 37
Section 10.4. Costs and Expenses. 37
ARTICLE 11 NOTICES 37
Section 11.1. General. 37
Section 11.2. Waiver of Service of Notice. 38
ARTICLE 12 AMENDMENTS TO BY-LAWS 38
ARTICLE 13 FURTHER ASSURANCES 38
Section 13.1. General. 38
Section 13.2. Failure to Deliver or Act. 39
ARTICLE 14 MISCELLANEOUS 39
Section 14.1. Inspection of Documents. 39
Section 14.2. Waiver. 39
Section 14.3. Conflicts. 39
Section 14.4. Severability. 39
Section 14.5. Gender. 39
Section 14.6. Captions. 39
RULES AND REGULATIONS 40

BY-LAWS

OF

THE 1296 PARK PLACE CONDOMINIUM

ARTICLE 1 GENERAL

Section 1.1. Purpose. The purpose of these By-Laws is to set forth the rules and procedures concerning the conduct of the affairs of the Condominium. The Condominium covers the Property, which consists of: (i) the Land, which is described in Exhibit A to the Declaration of Condominium of The 1296 Park Place Condominium; (ii) the Building, which includes, without limitation, the Units, the Common Elements and all easements, rights and appurtenances belonging thereto; and (iii) all other property, real, personal, or mixed, intended for use in connection therewith. The Property has been submitted to the provisions of the Condominium Act by the recording of the Declaration in the Register's Office, of which Declaration these By-Laws form a part.

Section 1.2. Definitions. All capitalized terms used in these By-Laws that are not otherwise defined in any of the Articles hereof shall have the meanings set forth in Exhibit C to the Declaration, unless the context in which the same are used shall otherwise require. All capitalized terms used in these By-Laws that are defined in any of the Articles hereof shall have the meanings ascribed to them in such Articles, unless the context in which the same are used shall otherwise require. Each of the aforedescribed capitalized terms shall be applicable to singular and to plural nouns, as well as to verbs of any tense.

Section 1.3. Applicability of By-Laws. These By-Laws are applicable to the Property and to the use and occupancy thereof.

Section 1.4. Application of By-Laws. All present and future Unit Owners, mortgagees, lessees, sublessees and occupants of Units, and employees and guests of Unit Owners, as well as all other Persons who may use the Property, are and shall be subject to the Declaration, these By-Laws and the Rules and Regulations, as each of the same may be amended from time to time. The acceptance of a deed or other instrument of conveyance, or the succeeding to title to, or the execution of a lease or sublease for, or the act of occupancy of, a Unit shall constitute an agreement that the provisions of the Declaration, these By-Laws and the Rules and Regulations, as each of the same may be amended from time to time, are accepted, ratified and will be complied with.

Section 1.5. Principal Office of the Condominium. The principal office of the Condominium shall be located either at the Property or at such other place reasonably convenient thereto as may be designated from time to time by the Condominium Board.

ARTICLE 2 BOARD OF MANAGERS

Section 2.1. General. As more particularly set forth in Sections 2.4, 2.5 and 2.6 hereof, the affairs of the Condominium shall be governed by the Condominium Board. In exercising its powers and performing its duties under the Declaration and these By-Laws, the Condominium

Board shall act as, and shall be, the agent of the Unit Owners, subject to, and in accordance with, the terms of the Declaration and these By- Laws.

Section 2.2. Status of the Condominium Board. Unless and until the Condominium Board shall incorporate in accordance with the terms of Section 2.4 hereof, the Condominium Board shall have, to the extent permitted by Law, the status conferred upon unincorporated associations under, or pursuant to, the terms of the General Association Law of the State of New York. If the Condominium Board shall incorporate in accordance with the terms of Section 2.4 hereof, the Condominium Board shall have, to the extent permitted by Law, the status conferred upon it under, or pursuant to, the terms of the applicable statutes of the State of New York. In either event, however, the Condominium Board shall also have the status conferred upon it under, or pursuant to, the terms of the Condominium Act.

Section 2.3. Principal Office of the Condominium Board. The principal office of the Condominium Board shall be located either at the Property or at such other place reasonably convenient thereto as may be designated from time to time by the Condominium Board.

Section 2.4. Powers and Duties of the Condominium Board.

(A) The Condominium Board shall have all of the powers and duties necessary for, or incidental to, the administration of the affairs of the Condominium, provided, however, that the Condominium Board shall not have such powers and duties that by Law, or pursuant to the terms of the Declaration and these By-Laws, may not be delegated to the Condominium Board by the Unit Owners. Without intention to limit the generality of the foregoing in any respect, the Condominium Board shall have the following specific powers and duties:

(i) to operate, maintain, repair, restore, add to, improve, alter and replace the Common Elements, including, without limitation, as the Condominium Board shall deem necessary or proper in connection therewith: (a) the purchase and leasing of supplies, equipment and material and (b) the employment, compensation and dismissal of personnel;

(ii) to acquire, in the name of the Condominium Board or its designee, corporate or otherwise, and on behalf of the Unit Owners, all rights, titles and interests in real and personal property deemed necessary or proper by the Condominium Board for use in connection with the ownership and operation of the Property as a condominium;

(iii) to maintain records with respect to the finances and the operation of the Condominium, including, without limitation: (a) detailed accounts of receipts and expenditures affecting the Property; (b) other financial records, as well as other books of account of the Condominium, as may be required to be kept pursuant to the terms of these By-Laws; and (c) minutes and other records of all meetings held pursuant to the terms of these By-Laws;

(iv) to prepare and adopt a budget for the Condominium for each fiscal year thereof, setting forth, without limitation: (a) a detailed accounting of the anticipated Common Expenses for the ensuing fiscal year and (b) a detailed projection of all sources and amounts of income necessary to discharge the same;

(v) To determine the amount and establish the means and methods of payment of, and to collect, the Common Charges and Special Assessments from the Unit Owners;

(vi) to borrow money on behalf of the Condominium when required in connection with the operation, maintenance, repair, restoration, improvement, alteration and replacement of the Common Elements, provided, however, that: (a) the affirmative consent of all of the members of the Condominium Board shall be required for the borrowing of any sum in excess of $25,000.00 in any one fiscal year (regardless of the balance of any loans outstanding from previous fiscal years); (b) the affirmative consent of all of all Unit Owners shall be required for the borrowing of any sum in excess of $25,000.00 in any one fiscal year (regardless of the balance of any loans outstanding from previous fiscal years); (c) no lien to secure repayment of any sum borrowed may be created on any Unit or its Appurtenant Interests without the consent of the owner of such Unit; and (d) the documentation executed in connection with any such borrowing shall provide that, if any sum borrowed by the Condominium Board pursuant to this subparagraph (vi) shall not be repaid by the Condominium Board, any Unit Owner who pays to the creditor thereunder such proportion of the then outstanding indebtedness represented or secured thereby as such Unit Owner's Common Interest bears to the aggregate Common Interest of all Unit Owners shall be entitled to obtain from the creditor a release of any judgment or other lien that the said creditor shall have filed, or shall have the right to file, against such Unit Owner's Unit;

(vii) to open and maintain bank accounts on behalf of the Condominium and to designate the signatories required therefor;

(viii) to use the Common Charges and Special Assessments collected from Unit Owners, as well as all other funds held by the Condominium Board or received in connection with the operation of the Property, for the administration of the Condominium, including, without limitation: (a) the payment of Common Expenses and (b) the making of restorations, additions, alterations and improvements to the Common Elements;

(ix) To obtain insurance for the Property, including the Units, pursuant to the terms of Section 5.4 hereof;

(x) to adjust and settle claims under insurance policies obtained pursuant to the terms of Section 5.4 hereof, and to execute and deliver releases upon such adjustment and settlement on behalf of: (a) all Unit Owners; (b) all holders of mortgages and other liens on Units; and (c) all holders of any other interest in the Property;

(xi) to make, or to contract with others for the making of, repairs, maintenance, additions and improvements to, and alterations, restorations and replacements of, the Property after damage or destruction by fire or other casualty, or as a result of condemnation or eminent domain proceedings, all in accordance with the terms of these By-Laws;

(xii) to accumulate reserve funds for capital replacements or other purposes;

(xiii) To accept the surrender of any Unit pursuant to the terms of paragraph (C) of Section 6.2 hereof, in the name of the Condominium Board or its designee, corporate or otherwise,

and on behalf of all Unit Owners;

(xiv) to purchase, lease, or otherwise acquire Units offered for sale or lease by their owners, in the name of the Condominium Board or its designee, corporate or otherwise, and on behalf of all Unit Owners;

(xv) to purchase Units at foreclosure or other judicial sales, in the name of the Condominium Board or its designee, corporate or otherwise, and on behalf of all Unit Owners;

(xvi) to sell, lease, mortgage and otherwise deal with Units acquired by, and to sublease Units leased by, the Condominium Board or its designee, corporate or otherwise, on behalf of all Unit Owners, provided, however, that the Condominium Board or its designees shall in no event be entitled to the vote appurtenant to any such Unit;

(xvii) To adopt and amend the Rules and Regulations and to levy and collect fines against Unit Owners for violations of the same;

(xviii) To enforce by legal means the terms, covenants and conditions contained in the Condominium Documents and to bring or defend against any proceedings that may be instituted on behalf of, or against, the Unit Owners;

(xix) to incorporate, to the extent and in the manner provided in the Condominium Act, provided, however, that: (a) the certificate of incorporation and by-laws of any such resulting corporation shall conform as closely as practicable to the terms of the Declaration and these By-Laws and (b) the terms of the Declaration and these By-Laws shall prevail in the event of any inconsistency or conflict between the terms thereof and the terms of such certificate of incorporation and by-laws;

(xx) to organize corporations to act as the designees of the Condominium Board in acquiring title to, or leasing of, Units and in acquiring rights, titles and interests in real and personal property for use in connection with the ownership and operation of the Property as a condominium;

(xxi) to execute, acknowledge and deliver: (a) any declaration or other instrument affecting the Property that the Condominium Board deems necessary or appropriate to comply with any Law applicable to the maintenance, demolition, construction, alteration, repair, or restoration of the Building and (b) any consent, covenant, restriction, easement, or declaration affecting the Property that the Condominium Board deems necessary or appropriate;

(xxii) to prepare, execute, acknowledge and record on behalf of all Unit Owners, as their attorney in fact, coupled with an interest, a restatement of the Declaration or these By-Laws, whenever, in the Condominium Board's estimation, it is advisable to consolidate and restate all amendments, modifications, additions and deletions theretofore made to the same;

(xxiii) to execute, acknowledge and deliver any documents necessary for filing an appeal for reduction of assessment of real estate taxes on behalf of all units in the Condominium, unless written notice is received by the Condominium Board from any Unit Owner not to so on

behalf of his or her condominium unit;

(xiv) unless and until real estate taxes, water charges and sewer rents are billed directly to the Unit Owners by the New York City Department of Finance and/or the Department of Environmental Protection, the Condominium Board shall promptly pay such taxes, charges and rents as a common expense. In the event there is a closing prior to the units being separately assessed for real estate taxes the Sponsor shall place in escrow in the name of the Board of Managers an amount equal to the real estate taxes which will be levied against the property for the six (6) month period following the first closing and will collect at each unit closing the estimated amount of taxes attributable to such unit. The unit owners(s) will be required to pay the entire amount of tax allocated to his unit at the time that the Board of Managers is required to make its real estate tax payment to the City of New York. The allocation for taxes will be based on the unit's percentage of common interest allocated to the unit; and

(xxv) To carry out any other duties imposed upon the Condominium Board pursuant to the Declaration and these By-Laws.

(B) The Condominium Board shall be responsible for carrying out the duties imposed upon it under the Condominium Documents regardless of whether a Unit is vacant or occupied by the owner thereof or by a permitted lessee or other permitted occupant.

Section 2.5. INTENTIONALLY OMITTED.

Section 2.6. Exercise and Delegation of Powers and Duties.

(A) Any act within the power of the Condominium Board to perform and deemed necessary or desirable to be performed by the Condominium Board, shall be performed by the Condominium Board or shall be performed on its behalf and at its direction by the agents, employees, or designees of the Condominium Board.

(B) The Condominium Board may appoint an Executive Committee by duly adopted resolution, which Executive Committee shall have, and may exercise, all of the powers of the Condominium Board, subject to both the exceptions and limitations contained in paragraph (D) of this Section 2.6 and such additional exceptions and limitations as the Condominium Board may from time to time deem appropriate, during the intervals between the meetings of the Condominium Board. In addition, the Condominium Board may from time to time appoint, by duly adopted resolutions, such other committees as the Condominium Board may deem appropriate to perform such duties and services as the Condominium Board shall direct, each of which committees shall have, and may exercise, all of the powers delegated to it in its enabling resolution, subject, however, to the exceptions and limitations contained in paragraph (D) of this Section 2.6.

(C) The Condominium Board shall employ a Managing Agent to serve at a compensation to be established by the Condominium Board and to perform such duties and services as the Condominium Board shall direct. The Sponsor shall act as Managing Agent for the first year of the condominium's operation. Subject to the exceptions and limitations contained in paragraph (D)

of this Section 2.6, the Condominium Board may delegate to the Managing Agent any of the powers granted to the Condominium Board in these By-Laws.

(D) Notwithstanding anything to the contrary contained in this Section 2.6, the Executive Committee and the Managing Agent shall neither have nor be entitled to exercise, and the Condominium Board shall not delegate to either of them or to any other committee, the powers or duties described in subparagraphs (ii), (iv), (v), (vi), (vii), (x), (xiii), (xiv), (xv), (xvi), (xvii), (xix), (xx) and (xxi) of paragraph (A) of Section 2.4 hereof. In addition, neither the Managing Agent nor any of the committees described in Subsection (B) of this Section 2.6 shall have, or be entitled to exercise, any of the powers of the Condominium Board, except to the extent permitted by Law.

Section 2.7. Number, Election and Qualification of Members

Initial Board: Until the first meeting of the Unit Owners following the First Closing of a Unit under the Plan is held the Condominium Board shall consist of one (1) or more individuals to be appointed and designated from time to time exclusively by Sponsor.

First Elected Board: At such first meeting of Unit Owners following the First Unit Closing under the plan and at all subsequent meetings of Unit Owners to elect the condominium Board, the Board shall be composed of three (3) Board Members. For so long as there is at least (1) Unsold Unit, the Condominium Board shall consist of a specified number of Independent Board Members and a specified number of Sponsor Board Members.

The Independent Board Members shall be elected exclusively by all Sold and Unsold Unit Owners, including Sponsor as Owner of any Unsold Units. The Sponsor Board Member(s) shall be appointed and designated exclusively by Sponsor for so long as Sponsor owns at least one (1) Unsold Unit, or, after Sponsor no longer owns any Unsold Unit, the Owners or Owners of a majority in Common Interest of Unsold Units. The Independent Board Member(s) shall represent the interest of the sold and Unsold Unit Owners on the Board. Both the Independent Board Member(s) and the Sponsor Board Member(s) shall make all decisions and conduct all transactions on behalf of the Board that affect the Common Elements, the Association's Properties, the Common Expenses or the Common Charges. The Sponsor board member(s) shall represent the interests of the Unsold Unit Owners on the Board and shall make all decisions and conduct all transaction on behalf of the Board that affects only the Unsold Unit and do not affect the Common Elements, the Associations Properties, the Common Expenses or the Common Charges.

Sponsor Voting Control of Board: Sponsor shall have the exclusive right to designate and appoint two (2) Sponsor Board Members and nominate and vote for the Independent Board Member(s) thereby giving Sponsor "voting control" to the condominium Board for five (5) years from the First Closing of a Unit under the Plan or until the unsold Units constitute less than twenty-five percent (25%) in Common Interest of all Units, whichever is sooner ("Sponsor Board Control Period"). At all elections held after the end of the Sponsor Board Period, Sponsor will no longer have the right to nominate candidates to serve as the Independent Board members (who will then constitute a majority of the Board Members) and thus Sponsor shall not thereafter exercise voting control of the Board. Sponsor, however, will continue to have the right, for as long as there is at

least one (1) Unsold Unit, to vote for the Independent Board Member(s) and to exclusively designate and appoint at least one (1) Sponsor Board Member.

Unit Owners should note that they may never gain control of the Board of Managers and owner-occupants and non-resident owners may have inherent conflicts on management of the condominium.

Sponsor will cause the Condominium Board to call a special meeting of Unit Owners to be held within approximately thirty (30) calendar days after the expiration of the Sponsor Board Control Period. At such meeting, one (1) additional Independent Board Member (i.e., individuals who are unrelated to Sponsor and Sponsors principals) will be elected to replace one (1) of the Sponsor Board Members (who will resign effective at the date of such election). At such time the Independent Board Members will constitute a majority of all Board Members.

Composition, Nomination and Voting Rules for Condominium Board:

From and after the first meeting of Unit Owners following the First Closing of a Unit, the condominium board shall consist of two (2) Sponsor Board Members and one (1) Independent Board Member. For so long as there is at least one (1) Unsold Unit, the composition of the Condominium board shall be as follows:

(a) at all elections held during only the Sponsor Board Control Period, the Condominium Board shall consist of two (2) Sponsor Board Members and one (1) Independent Board Member as delineated above; and

(b) at all elections held after the end of the Sponsor Board Control Period, the Condominium Board shall consist of two (2) Independent Board Members and one (1) Sponsor Board Member.

(c) after all Units in the building have been sold, the Condominium Board shall consist of all three (3) Independent Board Members.

The following rules shall govern the nomination and voting for the election of the Independent Board Members by the Unsold Unit Owners (including Sponsor):

(A) at all elections held during only the Sponsor Board Control Period, there is no restriction or limitation on the nomination and voting rights of Sponsor and other Unsold Unit Owners, who may both nominate and vote to elect any qualified candidates to serve as the Independent Board Member; and

(B) at al elections held after the end of the Sponsor Board Control Period, Sponsor and other Owners (if any) of Unsold units shall have the following right to vote (without restriction or limitation) for any and all candidates nominated to serve as Independent Board Members; but they may NOT designate any candidates to serve as Independent Board Members.

The foregoing restriction limiting Sponsor's nomination rights after the end of the Sponsor

Board Control Period applies only to nominating candidates to serve as Independent Board Members and does not apply to the Sponsor Board Member to be appointed and designated exclusively by Sponsor aforesaid.

Sponsor Veto Control Period Restrictions: Notwithstanding anything to the contrary contained in these By-Laws during only the Sponsor Veto Control Period (i.e., the period ending the earlier of: (a) the date that the Common Interests appurtenant to the Unsold Units constitute less than 25% of the aggregate Common Interests appurtenant to all Units; or (b) the fifth (5th) anniversary of the first Closing of a Unit under the Plan), the Condominium Board and Unit Owners shall and must obtain Sponsor's prior written Discretionary Approval or Consent to do any of the following:

(a) To raise Common Charges or levy a special Assessment for any of the following purposes:

(i) To make an Alteration to the Common Elements or the Association's Properties (the latter includes any Unit owner, leased licensed or otherwise held or operated by the condominium Board, or its nominee or designee);

(ii) to create a fund for reserves for non-capital Repairs, Alterations, unanticipated expenses and/or contingencies (i.e., a Reserve for Contingencies), which in the aggregate exceed five percent (5%) of the projected annual Common Expenses or five percent (5%) of the projected annual Common Expenses (as applicable) for any Budget Year of the Condominium Operation or increase, decrease, or eliminate the minimum ten percent (10%) Reserve for Capital Replacement to be included in each Budget in accordance with the Declaration.

(iii) To increase, decrease, eliminate or otherwise change the number, types, and calcification or working hours of the Buildings' service staff as set forth in the First Year's Budget.

(iv) to increase, decrease or eliminate building services by (for example) entering into contracts for new or additional services or maintenance work not included in said First Year's Budget, or failing to provide any service or maintenance contract set forth in such first Year's Budget, or otherwise; or

(v) to increase, decease, eliminate or otherwise change the amounted or types of insurance coverage from those set forth in said First Year's Budget, or

(b) To borrow money on behalf of the Condominium.

Limit on Sponsor Veto Control Period Restrictions: Sponsor has the right to condition, delay, withhold or deny its approval or consent to any of the items in the preceding subsection without cause or explanation, and without liability for any Claims or Cost and Expenses or other recourse against Sponsor for conditioning delaying, withholding or denying its consent. Nevertheless, Sponsor will give its approval or consent if the Costs and Expenses (as determined by Sponsor, in its sole and absolute judgment) of the proposed action requiring Sponsor's approval or consent, when added to all other budgeted Common Expenses, will not increase the Common

Charges (as applicable), inclusive of any Special Assessments of the Condominium Board, for the Budget year of the Condominium at issue, by more than 5% above the Common Charges (as applicable) for the immediately preceding Budget Year of the condominium. In addition, Sponsor may not exercise veto control over expenses included in the first Year's Budget or over expenses required: (a) to comply with applicable Laws; (b) to remedy a governmental notice or violation or (c) to remedy a work order of an insurer of the Building, (d) or any matter concerning the health and safety of the occupants of the building.

Veto Control of Sponsor and Unsold Unit Owners: Sponsor's veto control, as set forth herein, may be exercised during only the Sponsor Veto Control Period and solely by Sponsor while Sponsor owns any Unsold Unit. If Sponsor no longer owns any Unsold Unit, each successor Unsold Unit Owner will have the same right of veto control as Sponsor during only the Sponsor Veto Control Period. In the event of two (2) or more unsold Unit Owners, the required discretionary Consent of only those Owners of Unsold Units constituting a majority of the Common Interests of all Unsold Units will suffice. Nothing contained herein will extend the Sponsor Veto Control Period.

Section 2.8. Term of Office of Members. The term of office of each member of the Condominium Board shall continue for one (1) year. Notwithstanding anything to the contrary, however, each Condominium Board shall serve until a successor Board is elected and qualified.

There shall be no limit on the number of terms of office, successive or otherwise, that a member of the Condominium Board may serve. In addition, special meetings of Unit Owners may be held from time to time, pursuant to the By-Laws, whenever necessary for the affairs of the Condominium.

Section 2.9. Resignation of Members. Any member of the Condominium Board may resign his or her membership at any time by giving written notice thereof to the Condominium Board.

After the initial period of Sponsor control, a majority of the board of managers need not be owner-occupants or members of an owner- occupant's household who are unrelated to the Sponsor and its principals.

Section 2.10. Vacancies. Any vacancy on the Condominium Board shall be filled by calling a regular or special meeting to elect a new Board Member pursuant to Section 2.7 of these By-laws.

Section 2.11. INTENTIONALLY OMITTED.

Section 2.12. Regular Meetings of the Condominium Board. Regular meetings of the Condominium Board may be held at such time and place as shall be determined from time to time by a majority of the members thereof, provided that at least one (1) such meeting shall be held during each fiscal year.

Section 2.13. Special Meetings of the Condominium Board. Any member of the

Condominium Board may call a special meeting of the Condominium Board whenever he or she deems the same to be necessary or desirable.

Section 2.14. Waiver of Notice of Meetings. Any member of the Condominium Board may, at any time, waive notice of any meeting thereof in writing, and such waiver shall be deemed equivalent to the giving of notice. Attendance by a member of the Condominium Board at any meeting thereof shall constitute a waiver by him or her of notice of the time and place thereof.

Section 2.15. Quorum of the Condominium Board. For purposes of all meetings of the Condominium Board, the attendance of a majority of all Board Members thereof shall be required for the transaction of business. In connection therewith, one or more members of the Condominium Board may participate in any meeting thereof by means of telephone or similar communications equipment permitting all individuals participating in the meeting to hear each other at the same time, and such participation shall constitute presence at such a meeting for all purposes.

Section 2.16. Conduct of Meetings. The minutes of the meetings of the Condominium Board shall be faithfully recorded, which minutes shall include the full text of all resolutions duly adopted by the Condominium Board and a record of all transactions and proceedings occurring thereat. The then current edition of Robert's Rules of Order shall govern the conduct of meetings of the Condominium Board unless the same shall be in conflict with the terms of the Declaration, these By-Laws or the Condominium Act.

Section 2.17. Decision by the Condominium Board. Except as otherwise expressly provided in the Declaration or these By-Laws, the affirmative vote of a majority of the members of the Condominium Board shall constitute the decision of the Condominium Board. Alternatively, any decision that is required or permitted to be made by the Condominium Board may be made without a meeting thereof if all of the members of the Condominium Board shall individually or collectively consent in writing to such decision, and all such written consents shall be duly filed by the Condominium in the minutes of the Condominium Board. In the event of a deadlock in voting between the two units or in the Condominium Board, such deadlock shall be submitted to an arbitration board in accordance with Article 10, "Arbitration", below.

Section 2.18. Compensation of Members. No member of the Condominium Board shall receive any compensation from the Condominium for acting as such.

Section 2.19. Common or Interested Members of the Condominium Board. Each member of the Condominium Board shall perform his or her duties, and shall exercise his or her powers, in good faith and with a view to the interests of the Condominium. To the extent permitted by law, no contract or other transaction between the Condominium Board and either (i) any of its members or (ii) any corporation, partnership, fiduciary, firm, association, or other entity in which any of the members of the Condominium Board are officers, directors, employees, partners, fiduciaries, beneficiaries, or principals, or are otherwise interested, pecuniary or otherwise, shall be deemed either void or voidable because either (a) any such member of the Condominium Board was present at the meeting or meetings of the Condominium Board during which such contract or transaction was discussed, authorized, approved, or ratified, or (b) the vote of any such member was counted for such purpose, provided, however, that either:

(x) the fact thereof is disclosed to, or known by, the Condominium Board or noted in the minutes thereof, and the Condominium Board shall authorize, approve, or ratify such contract or transaction in good faith by vote of the Condominium Board;

(y) the fact thereof is disclosed to, or known by the Unit Owners, and the Unit Owners authorize, approve, or ratify such contract or transaction; or

(z) the contract or transaction is commercially reasonable to the Condominium Board at the time that the same is authorized, approved, ratified, executed, or otherwise consummated.

Any such member of the Condominium Board may be counted in determining the requisite attendance of any meeting of the Condominium Board that authorizes, approves, or ratifies any such contract or transaction.

Section 2.20. Liability of the Condominium Board.

(A) The members of the Condominium Board shall have no liability to the Unit Owners for errors of judgment, negligence, or otherwise, except that each member of the Condominium Board shall be liable thereto for his or her own bad faith or willful misconduct.

(B) Every contract made, and other document executed, by or on behalf of the Condominium Board, any committee thereof, or the Managing Agent shall expressly state (if obtainable and in addition to the limitation of liability of the officers of the Condominium and the Unit Owners pursuant to the terms of Sections 3.10 and 4.12 hereof, respectively) that the same is made or executed by or on behalf of the Condominium Board, such committee, or the Managing Agent solely as agent for the Unit Owners and that the members of the Condominium Board or such committee or the Managing Agent shall have no liability thereon, except to the extent of their liability, if any, as Unit Owners pursuant to the terms of Section 4.12 hereof.

(C) Neither the Condominium Board nor any member thereof shall be liable for either:

(i) any failure or interruption of any utility or other services to be obtained by, or on behalf of, the Condominium Board or to be paid for as a Common Expense; or

(ii) any injury, loss, or damage to any individual or property, occurring in or upon either a Unit or the Common Elements, and either: (a) caused by the elements, by any Unit Owner, or by any other Person; (b) resulting from electricity, water, snow or ice that may leak or flow from a Unit or any portion of the Common Elements; or (c) arising out of theft or otherwise.

(D) The Unit Owners shall jointly and severally indemnify and hold each member of the Condominium Board harmless from and against any claim or liability to others arising from his or her acts or omissions as, or by reason of the fact that such individual is or was, a member of the Condominium Board, except, however, to the extent that such claim or liability shall be due to, or shall arise out of, the bad faith or willful misconduct of such member.

ARTICLE 3 OFFICERS

Section 3.1. General. The principal officers of the Condominium shall be the President, the Secretary and the Treasurer. The Condominium Board may appoint a Vice President, an Assistant Treasurer, an Assistant Secretary and such other officers as in its discretion may be necessary or desirable. Where necessary, one individual may act as or hold the office of more than one office. All agreements, contracts, deeds, leases, checks and other instruments of the Condominium shall be executed, upon the direction of the Condominium Board, by the officers of the Condominium or by such lesser number of officers or by such other Person or Persons as may be designated from time to time by the Condominium Board.

Section 3.2. President. The President shall be the chief executive officer of the Condominium and shall preside at all meetings of the Unit Owners and of the Condominium Board. The President shall have all of the general powers and duties that are incident to the office of president of a stock corporation organized under the Business Corporation Law of the State of New York (hereinafter referred to as the "BCL", including, but not limited to, the power to appoint the members of all committees created by the Condominium Board from amongst the Unit Owners from time to time as he or she may decide, in his or her discretion, are appropriate to assist in the conduct of the affairs of the Condominium.

Section 3.3. Vice President. The Vice President shall take the place of the President and perform his or her duties whenever the President shall be absent or unable to act. If both the President and the Vice President are unable to act, the Condominium Board shall appoint some other member of the Condominium Board to act in the place of the President on an interim basis. The Vice President shall also perform such other duties as shall be imposed upon him or her from time to time by the Condominium Board or by the President.

Section 3.4. Secretary. The Secretary shall keep the minutes of all meetings of the Unit Owners and of the Condominium Board. The Secretary shall have charge of such books and papers as the Condominium Board shall direct and, in general, shall perform all of the duties that are incident to the office of secretary of a stock corporation organized under the BCL.

Section 3.5. Treasurer. The Treasurer shall have the care and custody of the funds and securities of the Condominium and shall be responsible for keeping full and accurate financial records and books of account thereof, showing all receipts and disbursements necessary for the preparation of all required financial data. The Treasurer shall be responsible for the deposit of all funds and other securities in the name of the Condominium Board or in the name of the Managing Agent in such depositories as may from time to time be designated by the Condominium Board and, in general, shall perform all of the duties incident to the office of treasurer of a stock corporation organized under the BCL.

Section 3.6. Election, Term of Office and Qualifications of Officers. Each of the officers of the Condominium Board shall be elected annually by a majority vote of the Condominium Board taken at the organizational meeting of each new Condominium Board and shall serve at the pleasure of the Condominium Board. At least a majority of the officers shall be elected from amongst the members of the Condominium Board who are Unit Owners. The other officers of the

Condominium, however, need not be Unit Owners or members of the Condominium Board and need not have any interest in the Condominium.

Section 3.7. Removal and Resignation of Officers. While the Sponsor is in control of the Board, any officer of the Condominium may be removed from office with cause, by an affirmative vote of a majority of the members of the Condominium Board. After initial period of Sponsor's control of the Board, any officer of the Condominium may be removed from office with or without cause, by an affirmative vote of a majority of the members of the Condominium Board. In addition, any officer may resign at any time by giving written notice to the Condominium Board. Finally, if the President or the Vice President of the Condominium shall cease to be a member of the Condominium Board during his or her term of office, such officer shall be deemed to have resigned his or her office effective upon the date upon which his or her membership shall cease.

Section 3.8. Vacancies. Any vacancy in an office shall be filled by a majority vote of the Condominium Board at any regular meeting of the Condominium Board or at a special meeting thereof called for such purpose.

Section 3.9. Compensation of Officers. No officer of the Condominium shall receive any compensation from the Condominium for acting as such.

Section 3.10. Liability of the Officers of the Condominium.

(A) The officers of the Condominium shall have no liability to the Unit Owners for errors of judgment, negligence, or otherwise, except that each officer of the Condominium shall be liable thereto for his or her own bad faith or willful misconduct. In addition, every contract made, and other document executed, by one or more officers or other Persons on behalf of the Condominium shall expressly state (if obtainable and in addition to the limitation of liability of the members of the Condominium Board and the Unit Owners pursuant to the terms of Sections 2.20 and 4.12 hereof, respectively) that the same is made or executed by such officers or Persons on behalf of the Condominium solely as agent for the Unit Owners and that such officers or Persons shall have no liability thereon, except to the extent of their liability, if any, as Unit Owners pursuant to the terms of Section 4.12 hereof.

(B) None of the officers of the Condominium shall be liable for either:

(i) Any failure or interruption of any utility or other services to be obtained by any such officer on behalf of the Condominium or to be paid for as a Common Expense; or

(ii) any injury, loss, or damage to any individual or property, occurring in or upon either a Unit or the Common Elements, and either: (a) caused by the elements, by any Unit Owner, or by any other Person; (b) resulting from electricity, water, snow, or ice that may leak or flow from a Unit or any portion of the Common Elements; or (c) arising out of theft or otherwise.

(C) The Unit Owners shall jointly and severally indemnify and hold each officer of the Condominium harmless from and against any claim or liability to others arising from his or her

acts or omissions as, or by reason of the fact that such individual is or was, an officer of the Condominium, except, however, to the extent that such claim or liability shall be due to, or shall arise out of, the bad faith or willful misconduct of such officer.

ARTICLE 4 UNIT OWNERS

Section 4.1. Annual Meetings of the Unit Owners. The first annual meeting of the Unit Owners shall be held approximately four (4) months after the First Closing, as provided both in this Article 4 and in Article 2 hereof. Thereafter, annual meetings of the Unit Owners shall be held within sixty (60) days of the anniversary date of the first meeting. At each such subsequent meeting, the Unit Owners shall transact such business as may properly come before such meeting. In the event that any annual meeting of members is delayed, the existing Condominium Board shall continue to serve.

Section 4.2. Special Meetings of Unit Owners. The Condominium Board shall call a special meeting of the Unit Owners whenever so directed by a duly adopted resolution of the Condominium Board or upon receipt of a petition calling for such a meeting signed by a Unit Owner. Each such resolution or petition shall set forth, in reasonable detail, the purposes for calling such a meeting, and no business shall be transacted at such special meeting except business reasonably related to such stated purposes.

Section 4.3. Place of Meetings. Meetings of the Unit Owners shall be held at the principal office of the Condominium or at such other suitable and convenient place as may be designated by the Condominium Board.

Section 4.4. Notice of Meetings. The Condominium Board shall give notice of each annual or special meeting of the Unit Owners to all Unit Owners then of record entitled to vote at such meeting, which notice shall set forth the purpose, time and place of such meeting. Such notice may be given to any Unit Owner by personal delivery, mail, telephone or telegram not later than five (5) business days prior to the day fixed for the meeting; however, the mailing of such notice to any Unit Owner, addressed to his or her address at the Property, at least ten (10) days prior to the day fixed for the meeting shall be conclusively deemed the giving of notice to such Unit Owner of such meeting. Any Unit Owner may designate an address for the giving of notice other than such Unit Owner's address at the Property by giving written notice thereof to the Condominium Board not less than ten (10) days prior to the giving of notice of the applicable meeting.

Section 4.5. Quorum of the Unit Owners. Except as otherwise provided in these By-Laws, the presence, in person or by proxy, of a majority of all Unit Owners shall be required at all meetings of the Unit Owners.

Section 4.6 Conduct of Meetings. The minutes of all meetings of the Unit Owners shall be faithfully recorded, which minutes shall include the full text of all resolutions duly adopted by the Unit Owners and a record of all transactions and proceedings occurring thereat.

Section 4.7. Order of Business. The order of business at all annual meetings of the Unit Owners shall be as follows:

(a) Roll call;
(b) Proof of notice of meeting;
(c) Reading of the minutes of the preceding meeting (unless waived);
(d) Reports of officers of the Condominium;
(e) Reports of committees;
(f) Reports of inspectors of election (when so required);
(g) Election or designation of members of the Condominium Board (if there is a vacancy);
(h) Unfinished business; and
(i) New business.

Section 4.8. Voting at Meetings of Unit Owners.

(A) Subject to the terms of Sections 2.7 and 4.9 hereof, at meetings of Unit Owners, each Unit Owner (including the Sponsor or its designee, for so long as Sponsor or such designee shall own Unsold Units) shall be entitled to cast one (1) vote for each unit owned.

(B) Notwithstanding the terms contained in paragraph (A) hereof, no Unit Owner may vote at any meeting of the Unit Owners if the Condominium Board has perfected a lien against such Unit Owner's Unit and the amount necessary to release such lien has not been paid at the time of such meeting. In addition, neither the Condominium Board nor any designee thereof shall be entitled to the vote appurtenant to any Unit owned by the Condominium Board or such designee. The vote of all Units whose owners are precluded from voting pursuant to the terms of this paragraph (B) will be excluded when computing the results of voting.

(C) A fiduciary shall be the voting member with respect to a Unit owned in a fiduciary capacity. In addition, if two (2) or more Persons own a Unit, they shall designate one Person amongst them the vote appurtenant to their Unit in a writing given to the Condominium Board, and the vote of such designee shall be binding upon all of such Persons. Failing such a designation, all of such Persons shall mutually exercise the vote appurtenant to such unit under one ballot without division, and the concurrence of all Persons shall be conclusively presumed if any one of them purports to exercise such vote without protest being contemporaneously made to the individual presiding over the meeting at which such vote is taken. If protest is made, the vote appurtenant to such Unit shall be counted solely for the purpose of determining whether the required attendance is present for such voting.

(D) The owner(s) of any Unit may designate any Person to act as a proxy on his or her behalf. The designation of any such proxy shall be made in a writing both signed and dated by the designor and delivered to the Condominium Board at or before the appointed time for the meeting(s) during which the same is to be effective. Any such designation shall be revocable at any time upon written notice given to the Condominium Board; however, no revocation of such a designation shall be effective with respect to any votes cast by such proxy prior to the receipt of such revocation notice by the Condominium Board.

Section 4.9. Election of Members of the Condominium Board. After the two-year period of initial control by Sponsor, each Unit Owner shall be entitled to designate one member of the Condominium Board, who shall represent him. See Section 2.7 above.

Section 4.10. Action without a Meeting. Any action required or permitted to be taken by the Unit Owners at a duly constituted meeting may be taken without such a meeting if the number of Unit Owners sufficient to approve such an action at a duly constituted meeting of the Unit Owners pursuant to the Declaration or to these By-Laws consent in writing to the adoption of a resolution approving such action. All written consents given by Unit Owners pursuant to this Section 4.10 shall be retained in the records of the Condominium together with a true copy of the resolution to which they relate.

Section 4.11. Title to Units. Title to any Unit may be taken by any Person or by any two (2) or more Persons as joint tenants, tenants in common, or tenants by the entirety, as may be appropriate, but not as owners in severalty.

Section 4.12. Contractual Liability of Unit Owners. Every contract made by the Condominium Board, by any officer of the Condominium, or by any superintendent or Managing Agent of the Building shall state (if obtainable and in addition to the limitation of liability of the members of the Condominium Board and the officers of the Condominium pursuant to the terms of Section 2.20 and 3.10 hereof, respectively), that the liability of any Unit Owner with respect thereto shall be limited to: (i) such proportionate share of the total liability thereunder as the Common Interest of such Unit Owner bears to the aggregate Common Interests of all Unit Owners and (ii) such Unit Owner's interest in his or her Unit and its Appurtenant Interests, unless otherwise provided by Law.

ARTICLE 5 OPERATION OF THE PROPERTY

Section 5.1. Maintenance.

(A) Except as otherwise provided in the Declaration or in these By-Laws, all painting, decorating, maintenance, and replacements, whether structural or non-structural, ordinary or extraordinary, (i) in or to any Unit and all portions thereof (including, but not limited to, the interior walls, ceilings and floors in the Unit, kitchen and bathroom fixtures and appliances, windows and their frames, sills and sashes, all doors (entrance and terrace or patio, if any) and their frames and saddles, exposed plumbing, gas and heating fixtures shall be performed by the owner of such Unit at such Unit Owner's cost and expense; and (ii) in or to the Common Elements shall be performed by the Condominium Board as a Common Expense (iii) in or to the Limited Common Elements shall be performed (a) by the Condominium Board and the cost and expense thereof will be charged to all Unit Owners as a Common Expense, if involving structural or extraordinary maintenance, repair or replacement, (except if necessitated by the negligent act or omission of the Unit Owner) or (b) by the Unit Owner having direct and exclusive access thereto at such Unit Owner's sole cost and expense, if involving painting, decorating, and non-structural ordinary maintenance, repairs and replacements.

However, if any work is necessitated by any condition or occurrence in the individual unit such Unit Owner shall be liable for such costs which are not paid by the insurance carrier. Promptly upon obtaining knowledge thereof, each Unit Owner shall report to the Condominium Board or to the Managing Agent any defect which the Condominium Board is responsible pursuant to the terms thereof. All painting, decorating, maintenance, repairs and replacements performed

hereunder or otherwise, whether by or at the behest of a Unit Owner or the Condominium Board, shall be performed in such a manner as shall not unreasonably disturb or interfere with any Unit Owners or the tenants and occupants of any Units.

(B) Notwithstanding anything to the contrary provided in paragraph (A) of this Section 5.1, however, the exterior glass surfaces of all windows of each Unit are to be washed and cleaned by the owner of such Unit at such Unit Owner's sole cost and expense. In addition, if any painting, decorating, maintenance, or replacements to the Property or any part thereof, whether structural or non-structural, ordinary or extraordinary, is necessitated by the negligence, misuse, or abuse of (i) any Unit Owner, the entire cost and expense thereof shall be borne by such Unit Owner, or (ii) the Condominium Board, the entire cost and expense thereof shall be borne by the Condominium Board as a Common Expense, except, in all events, to the extent that such cost and expense is covered by the proceeds of any insurance maintained pursuant to the terms of these By-Laws. Similarly, each Unit Owner shall be responsible for any and all damage to any Unit or to the Common Elements resulting from such Unit Owner's failure to maintain, repair, or replace his or her Unit or any portion thereof as required herein.

(C) Each Unit and all portions of the Common Elements shall be kept in first-class condition and order (and free of snow, ice and accumulation of water with respect to any terrace, patio, roof, or other part of the Property exposed to the elements) by the Unit Owner or the Condominium Board, whichever is responsible for the maintenance thereof as set forth herein, and such Unit Owner or the Condominium Board, as the case may be, shall promptly make or perform, or cause to be made or performed, all maintenance work (including, without limitation, painting, repairs and replacements) that is necessary in connection therewith. In addition, the public areas of the Building and those areas exposed to public view shall be kept in good appearance, in conformity with the dignity and character of the Building, by (i) the Condominium Board, with respect to such parts of the Building required to be maintained by it, and (ii) each Unit Owner, with respect to the interior and exterior surfaces of terraces, patios, windows and shades, venetian or other blinds, drapes, curtains or other window decorations in or appurtenant to his or her Unit.

The public areas of the Building as well as the private areas exposed to public view shall be kept in good appearance, in conformity with the dignity and character of the Building, as determined by the Condominium Board in its sole discretion, by the Condominium Board, with respect to such parts of the Building required to be maintained by it. In order to promote a consistent appearance of the Building from the outside, no Unit Owner shall be permitted to enclose, erect a greenhouse and/or alter a Limited Common Element appurtenant to a Unit in such a way that will alter the conformity of the Building, without the prior approval of the Condominium Board.

If the hallway appurtenant to a Unit is utilized by a single Unit Owner, such Unit Owner shall have the right to modify the decor of such hallway, provided that such decor is in keeping with the décor of the Condominium. Such Unit Owner shall be responsible, at its sole cost and expense, for all maintenance, repairs, replacements and upkeep of the common hallway and the furnishings located thereon.

(D) In the event that any Unit Owner, after receipt of written notice from the Condominium

Board, fails or neglects in any way to perform any of its obligations with respect to the painting, decorating, maintenance, repair or replacement of its Unit as provided in this Section 5 .1 (or of any Common Elements for which such Unit Owner is responsible under the Declaration or these By-Laws), the Condominium Board may perform or cause to be performed such painting, decorating, maintenance, repair or replacement unless such Unit Owner, within 5 days after receiving notice of such default by the Condominium Board, cures such default, or in the case of a default not reasonably susceptible to cure within such period, commences and thereafter prosecutes to completion, with due diligence, the curing of such default. All sums expended and all costs and expenses incurred in connection with the making of any such painting, decorating, maintenance, repair or replacement in such Unit Owner's Unit or to any such Common Element for which such Unit Owner is responsible, together with interest thereon at the rate of 2% per month (but in no event in excess of the maximum rate permitted by Law), shall be immediately payable by such Unit Owner to the Condominium Board and shall, for all purposes hereunder, constitute Common Charges payable by such Unit Owner.

Section 5.2. Alterations, Additions, or Improvements in and to Units.

(A) Upon Condominium Board approval, each Unit Owner shall have the right to:

(i) make alterations, additions, or improvements in the interior of his unit;

(ii) make alterations, additions, or improvements in the interior (i.e. enclosed storage spaces and other spaces that have no effect on the aesthetic of the Building) of any part of the property allocated to his unit; or

(iii) change the layout of his unit;

provided, however, that, with respect to any such alteration, addition, improvement or change in, to, of or upon a Unit:

(1) no physical modification shall be made to any other Unit, and the Common Interest or interior dimensions of any other Unit shall not be changed by reason thereof, unless the owner of such other affected Unit shall consent thereto;

(2) the Unit Owner shall agree to hold the Condominium Board and all other Unit Owners harmless from any liability arising therefrom; and

(3) such alteration, addition, improvement or change shall not jeopardize the soundness or structural integrity of any part of the Building or the safety of any tenant or other persons at the Property.

In the event that any unit is subdivided, the subdivided units shall jointly exercise and share the vote allocated to the original unit.

Prior to, and as a condition of, the granting of any such approval, the Condominium Board may, at its sole option, require the Unit Owner to procure and agree to maintain during the course

of such work such insurance as the Condominium Board may reasonably prescribe and to execute an agreement, in form and substance satisfactory to the Condominium Board, setting forth the terms and conditions under which such alteration, addition, improvement, or repair may be made, including, without limitation, the indemnity referred to in paragraph (D) hereof and the days and hours during which any such work may be done.

(B) All alterations, additions, and improvements by Unit Owners shall be made in compliance with laws. In connection therewith, the Condominium Board shall execute applications to any departments of the City of New York, or to any other governmental agencies having jurisdiction thereof, for any and all permits required in connection with the making of alterations, additions, improvements, or repairs in or to a Unit, provided that, with respect to all such work of a structural nature (but other than that of the nature described in paragraph (B) hereof), the same was approved by the Condominium Board pursuant to the terms of paragraph (A) hereof.

(C) Neither the Condominium Board nor any Unit Owner (other than the Unit Owner(s) making any alterations, improvements, additions, or repairs, or causing any of the same to be made, in or to his, her or their Unit(s)) shall incur any liability, cost, or expense either (i) in connection with the preparation, execution, or submission of the applications referred to in paragraph (C) hereof; (ii) to any contractor, subcontractor, materialman, architect, or engineer on account of any alterations, improvements, additions, or repairs made or asserting any claim for personal injury or property damage arising therefrom. Any Unit Owner(s) making any alterations, improvements, additions, or repairs, or causing any of the same to be made, in or to his, her or their Unit(s) shall agree (in a writing executed and delivered to the Condominium Board, if the Condominium Board shall so request), and shall be deemed to agree (in the absence of such writing), to indemnify and hold the Condominium Board, the members of the Condominium Board, the officers of the Condominium, and the Managing Agent and all other Unit Owners harmless from and against any such liability, cost and expense.

(D) Sponsor shall have the right, without the approval of the Condominium Board, the Selling Agent, the Managing Agent, or other Unit Owners, to:

(a) make alterations, additions, improvements, or repairs in or to any Unsold Unit or Units, whether structural or non-structural, interior or exterior, ordinary or extraordinary; and

(b) subdivide, combine and change the boundary walls of its Unit(s), provided the same does not materially interfere or affect any other Unit,

(c) Subdivide the percent common interest of any Unit. In the event that any Unit is subdivided subject to the terms and conditions of any offering plan approved by the New York State Department of Law, in connection with a subdivision of the Unit, the Individual Units shall severally exercise and share the vote and the percentage of common interest allocated to each Individual Unit.

Section 5.3. Alterations, Additions, or Improvements to the Common Elements. Except as otherwise provided in the Declaration or in these By-Laws, all necessary or desirable alterations, additions, or improvements in or to any of the Common Elements shall be made by the

Condominium Board, and the cost and expense thereof shall constitute a Common Expense. Notwithstanding the foregoing, however, whenever the cost and expense of any such alterations, additions, or improvements would, in the judgment of the Condominium Board, exceed $5,000.00 in the aggregate in any calendar year, such proposed alterations, additions, or improvements shall not be made unless first approved by all of the Unit Owners at a duly constituted meeting of the Unit Owners and by the Mortgagee Representatives, if any. Except as otherwise provided in the Declaration and in these By-Laws, all such alterations, additions, or improvements costing $5,000.00 or less in the aggregate in any calendar year may be made as aforesaid without the approval of either the Unit Owners or any Mortgagee Representatives.

Section 5.4. Insurance.

(A) If the same shall be obtainable, the Condominium Board shall obtain, and shall maintain in full force and effect, fire insurance policies with all risk extended coverage, vandalism and malicious mischief endorsements, insuring the Building (not including: (i) the Units from the unfinished walls, subfloor, and underside of the celling inward; (ii) all bathroom and kitchen fixtures installed therein; (iii) all service machinery contained therein; and (iv) any appliances or any furniture, furnishings, decorations, belongings, or other personal property supplied or installed by Unit Owners or the tenants of Unit Owners) and covering the interest of the Condominium, the Condominium Board, all of the Unit Owners and all Permitted Mortgagees, as their interests may appear. Each of the said policies shall contain:

(i) waivers of (a) subrogation, (b) any defense based upon co-insurance or other insurance, (c) invalidity arising out of any acts of the insured, and (d) pro-rata reduction of liability;

(ii) a provision that any adjustment of loss will be made by the Condominium Board and that all proceeds thereof shall be paid to either the Condominium Board or the Insurance Trustee, as provided in Section 5.5 hereof;

(iii) a New York standard mortgagee clause in favor of each Permitted Mortgagee, which shall provide that the proceeds thereof shall be paid to such Permitted Mortgagee as its interest may appear, subject, however, to the loss payment provisions in favor of the Condominium Board and the Insurance Trustee set forth in subparagraph (ii) above and in Section 5.5 hereof; and

(iv) a provision that such policy may not be either cancelled or substantially modified except upon at least ten days' prior written notice to all of the insureds, including all Permitted Mortgagees.

(v) Duplicate originals or certificates of all such policies and of all renewals thereof, together with proof of payment of premiums, shall be sent to all Unit Owners and Permitted Mortgagees at least ten days prior to the expiration of the then current policies.

(B) The Condominium Board shall also obtain and maintain, to the extent practicable:

(i) comprehensive general liability insurance, covering all claims for personal injury or property damage arising out of any occurrence on the Property and listing as co-insureds (a) the Condominium Board and each member thereof, (b) the Managing Agent or manager (if any), (c) each officer and employee of the Condominium and (d) each Unit Owner (except, however, that such insurance shall not cover any liability of a Unit Owner arising from occurrences within his or her own Unit);

(ii) rent insurance (if applicable);

(iii) workmen's compensation and New York State disability benefits insurance;

(iv) boiler and machinery insurance; and

(v) such other insurance as the Condominium Board shall from time to time determine.

Each of the aforementioned policies of insurance shall also cover cross-liability claims of one insured against another.

(C) All policies of insurance to be maintained by the Condominium Board shall contain such limits as the Condominium Board shall from time to time determine, provided, however, that:

(i) with respect to insurance policies maintained by the Condominium Board pursuant to paragraph (A) hereof, the coverage shall be in an amount equal to not less than eighty percent of the full replacement cost of the Building, exclusive of excavation and foundations, without deduction for depreciation, as approved by a fire insurance company, a qualified insurance broker, or another qualified source;

(ii) with respect to insurance policies maintained by the Condominium Board pursuant to subparagraph (i) of paragraph (B) hereof, such policies shall contain single limits of not less than $500,000.00 in the aggregate until the first regular meeting of the first Condominium Board elected by the Unit Owners; and

(iii) with respect to insurance policies maintained by the Condominium Board pursuant to subparagraph (ii) of paragraph (B) hereof, the coverage shall be in an amount equal to the aggregate of all of the Unit Owners' Common Charges for one year.

Any insurance policies maintained by the Condominium Board may also provide for such deductible amounts as the Condominium Board shall determine. The Condominium Board shall review the limits of each insurance policy, as well as the amount of any deductible sum thereunder, at least once each year.

(D) The cost of all insurance maintained by the Condominium Board pursuant to this Section 5.4, together with the fees and disbursements of any Insurance Trustee appointed by the Condominium Board pursuant to the terms of these By-Laws, shall be borne by the Condominium Board as a Common Expense.

(E) Unit Owners shall not be prohibited from carrying other insurance for their own benefit, provided that all such policies shall contain waivers of subrogation and further provided that the liability of the carriers issuing the insurance maintained by the Condominium Board shall not be affected or diminished by reason of any such, additional insurance carried by any Unit Owner.

Section 5.5. Casualty or Condemnation.

(A) In the event that either (i) the Building or any part thereof is damaged or destroyed by fire or other casualty (hereinafter referred to as a "Casualty Loss") or (ii) the Common Elements or any part thereof is taken in condemnation or by eminent domain (hereinafter referred to as a "Taking"), the net insurance proceeds payable under the insurance policies maintained by the Condominium Board pursuant to the terms of Section 5.4 hereof by reason of such Casualty Loss or the net condemnation awards receivable by reason of such Taking, as the case may be, shall be payable to the Condominium Board. In either instance, all such monies actually received (hereinafter referred to as the "Trust Funds") shall be held in trust for the benefit of all Unit Owners and their Permitted Mortgagees and shall be disbursed pursuant to the terms of this Section 5.5. Notwithstanding anything to the contrary contained either in this paragraph (A) or elsewhere in this Section 5.5, however, no Unit Owner whose Unit, or any portion thereof, is taken in condemnation or by eminent domain (whether or not all or a part of the Common Elements are contemporaneously taken) shall be deemed to have waived whatever rights that he or she may have to pursue a separate claim against the condemning authority by reason thereof.

(B) Subject to the terms of paragraph (D) hereof, the Condominium Board shall arrange for the prompt repair or restoration (hereinafter referred to as the "Work" of: (i) in the event of a Casualty Loss, the portion(s) of the Building (including all Units and the bathroom and kitchen fixtures installed therein on the date of recording the Declaration and all service machinery contained therein, but not including appliances or any furniture, furnishings, decorations, belongings, or other personal property supplied or installed by either Unit Owners or the tenants of Unit Owners) affected by such Casualty Loss or (ii) in the event of a Taking, the portion(s) of the Common Elements affected by such Taking. If, pursuant to the immediately preceding sentence, work is to be performed in or to Units, Common Elements that service or enclose Units and other Common Elements, or any combination of the foregoing, the work shall be performed, to the extent practicable, first in or to the Units, next in or to the Common Elements that service or enclose Units and then in or to the balance of the Common Elements. In addition, each Unit Owner whose Unit, or any portion thereof, shall be the subject of all or part of any Work shall have the right, subject to the terms of Section 5.2 hereof, to supervise any redecorating of his or her Unit.

(C) In the event that Work shall be performed pursuant to the terms of paragraphs (B) and (D) of this Section 5.5, the Condominium Board or the Insurance Trustee, as the case may be, shall disburse the Trust Funds to the contractors engaged in the Work in appropriate progress payments. If the Trust Funds shall be less than sufficient to discharge the cost and expense of performing the Work, the Condominium Board shall levy a Special Assessment against all Unit Owners for the amount of such deficiency in proportion to their respective Common Interests, and all proceeds of such Special Assessment shall become part of the Trust Funds. However, if the

insurance proceeds are not sufficient to discharge the cost and expense of performing any work attributable to any part of the building which is not a "Common Element", such cost and expense must be paid by the owner or owners of the Units or Limited Common Element which were damaged and no special assessment may be levied against the Unit Owners. If, conversely, the Trust Funds shall prove to be more than sufficient to discharge the cost and expense of performing the Work, such excess shall be paid to the Unit Owner of the damaged unit, except that no payment shall be made to a Unit Owner until there has first been paid, out of said excess, such amounts as may be necessary to reduce unpaid liens on the Unit Owner's Unit (other than mortgages that are not Permitted Mortgages) in the order of priority of such liens. Notwithstanding the foregoing, however, in the event that the Unit Owners are assessed pursuant to the terms of the second sentence of this paragraph (C) for any projected deficiency in the amount of the Trust Funds available to the Condominium Board and, after the payment of all costs and expenses incurred in connection with the Work, any portion of the Trust Funds remains unspent, such excess Trust Funds shall, to the extent of such Special Assessment, be deemed to be, and shall constitute, an unspent Special Assessment and shall be paid to the Unit Owners so assessed in proportion to their respective Common Interests, free of any claim of any lienor (including, without limitation, any Permitted Mortgagee).

In the event that the damage is caused to both a Unit and any portion of the Common Elements, the Condominium Board shall retain the services of an insurance adjuster to determine the amount of damages caused separately to the Unit and the Common Element, and all the underpayments and overpayments shall be subject to provisions in paragraph (C).

(D) If either 75% or more of a Building is destroyed or substantially damaged by fire or other casualty or 75% or more of the Common Elements are taken in a Taking, the Work shall not be performed unless 75% or more of the Unit Owners of the Building shall promptly resolve to proceed with the same. In the event that a sufficient number of Unit Owners shall so resolve, the Work shall be performed pursuant to the terms of paragraphs (B) and (C) hereof. Conversely, in the event that a sufficient number of Unit Owners shall either fail or refuse to so resolve, the Work shall not be performed and the Property shall be subject to an action for partition by any Unit Owner or lienor, as if owned in common, in which event the net proceeds of the resulting sale, together with any Trust Funds, shall be paid to all Unit Owners in proportion to their respective Common Interests, except that no payment shall be made to a Unit Owner until there first has been paid, out of such Unit Owner's share of such funds, such amounts as may be necessary to reduce unpaid liens on the Unit Owner's Unit (other than mortgages that are not Permitted Mortgages) in the order of priority of such liens.

(E) [INTENTIONALLY OMITTED].

(F) If (i) a portion of any Unit shall be taken in condemnation or by eminent domain and (ii) the Condominium shall not be terminated by reason of a simultaneous Taking pursuant to the terms of paragraph (D) hereof, the Common Interest appurtenant to such Unit shall be adjusted in the proportion that the total floor area of such Unit after such Taking bears to the total floor area of such Unit prior to such Taking. The Condominium Board shall promptly prepare and record an amendment to the Declaration reflecting the new Common Interest appurtenant to such Unit, which amendment shall be executed by the owner of such Unit together with the holders of record

of any liens thereon (or, in lieu of execution by such Unit Owner and lienors, the same may execute a consent to such amendment in recordable form). In either event, the Common Interests of the other or remaining Units shall be adjusted accordingly and reflected in an amendment to the Declaration duly executed and acknowledged by the Condominium Board and the owners of, together with the holders of record of all liens upon, all of the other or remaining Units.

(G) As used in this Section 5.5, the terms:

"prompt repair or restoration" shall mean that the Work is to be commenced not more than sixty (60) days after the date on which the Condominium Board has received the Trust Funds, whether or not the same are sufficient to discharge the cost and expense of the Work; and

"promptly resolve" shall mean that a resolution shall be duly made not more than sixty days after the date on which the Condominium Board notifies the Unit Owners that it has received the Trust Funds and that the same are or are not sufficient to discharged the estimated cost and expense of the Work, as the case may be.

(H) Any dispute that may arise under this Section 5.5 between Unit Owners or between any Unit Owner(s) and the Condominium Board shall be resolved by arbitration pursuant to the terms of Article 10 hereof.

Section 5.6. Use of The Property.

(A) No nuisance shall be allowed on the Property, nor shall any use or practice be allowed that either is a source of annoyance to its residents or interferes with the peaceful possession or proper use of the Property by its residents or occupants. Any expense incurred by the Condominium due to the creation of a nuisance thereof by a Unit Owner or any occupant, agent, tenant, invitee, guest, friend, or family member, as determined by the Condominium Board, shall be paid by the offending Unit Owner, together with any fine, fee or penalty set forth by the Condominium Board. No immoral, improper, offensive, or unlawful use shall be made of the Property or any portion thereof, and all valid Laws relating to any portion of the Property shall be complied with at the full cost and expense of the respective Unit Owners or the Condominium Board, whoever shall have the obligation to maintain or repair such part of the Property.

(B) Nothing shall be done or kept in any Unit or in any of the Common Elements that would increase the rate of insurance for the Property, except upon the prior written consent of the Condominium Board. No Unit Owner shall permit anything to be done or kept in a Unit or in the Common Elements that will result in the cancellation of insurance on the Property or the contents thereof, or that would be in violation of any law. No waste shall be committed in the Common Elements.

(C) Nothing shall be done in any Unit or in, on or to the Common Elements that will impair the structural integrity of the Property or that will structurally change the Building, except as is otherwise provided in the Declaration or in these By-Laws. In no event shall interior partitions contributing to the support of any Unit or the Common Elements be altered or removed.

Section 5.7. Use of the Units.

(A) In order to provide for congenial occupancy of the Property and for the protection of the values of the Units, the use of Units shall be restricted to, and shall be in accordance with, the terms contained in the balance of this Section 5.7. Each Unit may be used in accordance with the use permitted by local law and zoning regulations and the Certificate of Occupancy. Any Unit may be partially used as a professional office by the owner of such unit only.

(B) A Unit owned or leased by an individual, corporation, partnership, fiduciary, or any other entity may be occupied only by said individual, or by an officer, director, stockholder, or employee of such corporation, or by a partner or employee of such partnership, or by said fiduciary (including directors, officers, stockholders, or employees of corporate fiduciaries and partners and employees of partnership fiduciaries), or by the beneficiary of said fiduciary, or by a principal or employee of such other entity, respectively, or by the Family Members and guests of any of the foregoing (and nothing herein contained shall be deemed to prohibit the exclusive occupancy of any Unit by such Family members or guests). Notwithstanding the foregoing, the Condominium Board may, in its sole discretion, permit Persons other than those set forth above to occupy a Unit. In no event, however, shall a portion of a Unit (as opposed to the entire Unit) be sold, conveyed, leased, or subleased, and no transient occupant (other than a guest permitted under this paragraph (B)) may be accommodated therein.

Section 5.8. Use of the Common Elements. (A) Subject to the terms of paragraph (B) of this Section 5.8, the Common Elements (including, without limitation, the electrical, heating, gas, plumbing and other mechanical systems and equipment of the Building and the Facilities) may be used only for the furnishing of the services and facilities, and for the other uses, for which they are reasonably suited and capable. The lobbies, vestibules, public halls, stairways and shall be used only for normal passage through them. Accordingly, all Unit Owners shall require their tradesmen to utilize exclusively the entrance designated by the Condominium Board for transporting packages, merchandise, or other objects.

Use of the Limited Common Elements. The cost of maintenance, repair and replacement of Limited Common Elements shall be borne by the Unit Owner having the exclusive or shared use thereto if such Unit Owner or other person for whom s/he is legally responsible for has caused damage thereto. In the event that the damage caused to a limited common element was not brought about by the Unit Owner having exclusive or shared right thereto or such other person for whom s/he is legally responsible for, the Condominium Board shall be responsible for the cost of such maintenance, repair and replacement, if so necessary.

Section 5.9. Rights of Access.

(A) Subject to the rights of existing tenants and other occupants of Unsold Units, each Unit Owner shall grant to the Condominium Board, to the Managing Agent or manager (if any), to the superintendent and/or to any other Person authorized by any of the foregoing a right of access to his or her Unit for the purposes of:

(i) making inspections of, or removing violations noted or issued by any governmental

authority against, the Common Elements or any other part of the Property;

(ii) curing defaults hereunder or under the Declaration or violations of the Rules and Regulations committed by such Unit Owner or correcting any conditions originating in his or her Unit and threatening another Unit or all or a portion of the Common Elements;

(iii) performing maintenance, installations, alterations, repairs, or replacements to the mechanical or electrical services, or other portions of the Common Elements located within his or her Unit or elsewhere in the Building;

(iv) reading, maintaining, or replacing utility meters relating to the Common Elements, to his or her Unit, or to any other Unit; or

(v) correcting any condition that violates the provisions of any Permitted Mortgage encumbering another Unit.

Except in cases of emergency (that is, a condition requiring repairs or replacements immediately necessary for the preservation or safety of the Building or for the safety of the occupants of the Building or other individuals, or required to avoid the suspension of any necessary service in the Building), the foregoing rights of access shall be exercised only upon not less than one day's advance notice and only in such a manner as will not unreasonably interfere with the use of the Units for their permitted purposes. In cases of emergency, however, such rights of access may be exercised immediately, without advance notice and whether or not the Unit Owner is present.

(B) For purposes of paragraph (A), each Unit Owner shall grant to the Condominium Board a right of access to his or her Unit and the Condominium Board shall grant rights of access to the Common Elements, provided that access thereto shall not be exercised with respect to any Unit in such a manner as will unreasonably interfere with the use of such Unit for its permitted purposes.

(C) A right of access is hereby granted to the unit owners, their successors, heirs and assigns, for the purpose of gaining access to the following areas: common areas; mechanical areas of the building, including but not limited to the boiler room, storage room, meter room or any other facility to which each such unit owner has a right of use; or to any area of the property that such Unit Owner has a right to use as part of his Unit or as a Common Element. However, the right shall only be exercised in a reasonable manner.

Section 5.10. Modification of the Rules and Regulations. The Condominium Board shall have the right to amend, modify, add to or delete any of the Rules and Regulations from time to time, provided, however, that any such amendment, modification, addition, or deletion may be overruled by the vote of 66 2/3% of the Unit Owners. Copies of the text of any amendments, modifications, additions, or deletions to the Rules and Regulations shall be furnished to all Unit Owners not less than thirty days prior to the effective date thereof.

Section 5.11. Real Estate Taxes, Water Charges and Sewer Rents. Water for the Building shall be supplied by the City of New York. Unless and until real estate taxes, water charges and sewer rents are billed directly to Unit Owners by the City Collector, the Condominium Board shall promptly pay such taxes, charges and rents as a Common Expense. However, the Condominium Board shall have the right, exercisable in its sole discretion to require the installation of submeters to determine the consumption of water by each Unit. In the event of a proposed sale of any Unit, the Condominium Board (for so long as the Condominium Board is still paying such real estate taxes, water charges and sewer rents) shall, upon the written request of the selling Unit Owner, execute and deliver to the purchaser of such Unit or to such purchaser's title company, a letter agreeing to promptly pay all such taxes, charges and rents affecting such owner's Unit to the date of the closing of title to such Unit.

Section 5.12. INTENTIONALLY OMITTED.

Section 5.13. Gas and Electricity. Gas and electricity, shall he supplied to each Unit through a separate meter for such Unit, and each (Unit Owner shall be required to pay all charges for gas and electricity consumed or used in his or her Unit directly to the utility company servicing the Building as and when billed therefor. However, the Condominium Board shall have the right, exercisable in its sole discretion, to require that gas and electricity be supplied to the Condominium through one or more common meters. In such an event, the cost thereof shall be borne by each Unit Owner based upon the consumption or usage of gas and electricity in his or her Unit, as determined by submetering, survey, or any other reasonable method prescribed by the Condominium Board and permitted by Law, and shall be payable either to the Condominium Board or to the utility company servicing the Building, as directed by the Condominium Board. Units 1-6 will equally share the cost of one gas meter to be used for cooking only.

Section 5.14. Utilities Serving the Common Elements. The cost and expense of water, steam, electricity and gas serving or benefitting any Common Element shall be (i) considered part of the expense of maintaining such Common Elements, (ii) determined by the Board and (iii) charged to the Unit Owners as a Common Expense. The Condominium reserves the right to have sub-meters installed and bill unit owners for their allotted water use which shall be payable to the Condominium in addition to the regular monthly Common Charges.

Section 5.15. Vault Charges. All license fees, and all periodic taxes and charges, for vaults or other protrusions beyond the building line shall be paid by the Condominium Board as a Common Expense.

Section 5.16. Records and Audits.

(A) The Condominium Board, or the Managing Agent, shall keep full, detailed and accurate records with respect to the financial affairs of the Condominium, which records and books of account shall include, without limitation, (i) a listing of all receipts of and expenditures by the Condominium Board and the Managing Agent and (ii) a separate listing for each Unit, setting forth, among other things, the amount of each assessment of Common Charges and Special Assessments levied against such Unit, the date when due, the amounts paid thereon and the balance, if any, remaining unpaid.

(B) Within (4) four months after the end of each fiscal year of the Condominium, the Condominium Board shall submit to each Unit Owner, and, if so requested, to any Permitted Mortgagee, an annual report of the receipts and expenditures of the Condominium prepared by an independent accountant. The cost of preparing and distributing each such report shall be borne by the Condominium Board as a Common Expense.

ARTICLE 6 COMMON CHARGES

Section 6.1. Determination of Common Expenses and Fixing of Common Charges.

(A) From time to time, but not less frequently than once a year, the Condominium Board shall: (i) prepare and adopt and budget for the Condominium, subject, in all respects, to the strictures set forth in Section 2.5 hereof; (ii) determine the aggregate amount of Common Charges necessary to be charged to the Unit Owners in order to meet the Common Expenses; and (iii) allocate and assess such Common Charges amongst the Unit Owners pro-rata, in accordance with their respective Common Interests (except as otherwise provided in the Declaration or in these By-Laws). The Condominium Board shall advise all Unit Owners promptly thereafter in writing of the amount of Common Charges payable by each of them and, not later than ten days next preceding the date upon which the first installment of newly determined Common Charges is due, shall furnish copies of the budget (in a reasonably itemized form) upon which such Common Charges are based to all Unit Owners and to their respective Permitted Mortgagees. The Condominium Board may, at its sole discretion, from time to time increase or decrease the amount of Common Charges allocated to the Units and payable by the Unit Owners and may modify its prior determination of the Common Expenses for any fiscal year so as to increase or decrease the amount of Common Charges payable for such fiscal year or portion thereof; however, no such revised determination of Common Expenses shall have a retroactive effect on the amount of Common Charges payable by Unit Owners for any period prior to the date of such new determination.

(B) The failure or delay of the Condominium Board to prepare or adopt a budget or to determine the Common Expenses for any fiscal year or portion thereof shall not be deemed a waiver or modification in any respect of the covenants and provisions hereof or a release of any Unit Owner from the obligation to pay Common Charges. In such event, the Common Charges that were computed on the basis of the Common Expenses last determined for any fiscal year or portion thereof shall continue thereafter to be the Common Charges payable by the Unit Owners until a new determination of the Common Expenses shall be made.

(C) In addition to the foregoing duty to determine the amount of and assess Common Charges, the Condominium Board shall have the right, subject, in all respects, to the strictures contained in Section 2.5 hereof, to levy Special Assessments to meet the Common Expenses. All Special Assessments shall be levied against all Unit Owners in proportion to their respective Common Interests and may be payable either in one lump sum or in installments, as the Condominium Board shall determine, provided, however that the Condominium Board shall give each Unit Owner not less than fifteen (15) days' notice prior to the date upon which such Special Assessment, or the first installment thereof, shall be due and payable, which notice shall set forth, in reasonable detail, the nature and purpose thereof. The Condominium Board shall have all rights

and remedies for the collection of Special Assessments as are provided herein for the collection of Common Charges (including, without limitation, the provisions of Section 6.4 hereof).

(D) The excess of all rents, profits and revenues derived from the rental or use of any space forming a part of, or included in, any Common Element remaining after deduction of all expenses incurred in connection with generating the same shall constitute income of the Unit Owners, and shall be collected on behalf of the Unit Owners by the Condominium Board and applied against the Common Expenses for the year in which collected. In the event that such net rents, profits and revenues, together with the Common Charges and any Special Assessments collected from the Unit Owners, for any year of operation shall exceed the Common Expenses for such year, then such excess shall be applied by the Condominium Board against the Common Expenses for the next succeeding year(s) of operation, and no Unit Owner shall be entitled to a distribution of any portion of such excess unless the Condominium Board shall determine to distribute all or part of such excess to all Unit Owners pro-rata, in proportion to their respective Common Interests. Notwithstanding any provision contained in these By-Laws or in the Declaration to the contrary, however, in no event shall any rent, profit, or revenue derived from the rental or use of any space in the Building be deemed to be derived from the rental or use of any floor slabs, ceilings, or walls delineating or enclosing such space or the incidental use of any portion of any Common Elements appurtenant to such space.

Section 6.2. Payment of Common Charges.

(A) All Unit Owners shall be obligated to pay Common Charges and Special Assessments assessed by the Condominium Board pursuant to the terms of Section 6.1 hereof at such time or times (but not less than annually) as the Condominium Board shall determine. Unless otherwise determined by the Condominium Board, Common Charges shall be payable in installments on the first day of every month in advance. To the extent permitted by Law, the Condominium Board shall have a lien on each Unit, on behalf of all Unit Owners, for unpaid Common Charges and Special Assessments assessed against such Unit. Such lien, however, shall be subordinate, to the extent required by Law, to any liens for real estate taxes assessed against such Unit.

(B) No Unit Owner shall be liable for the payment of any part of the Common Charges and any Special Assessments assessed against his or her Unit subsequent to a sale, transfer, or other conveyance by him or her of such Unit, together with its Appurtenant Interests, made in compliance with the terms of Article 7 hereof. A purchaser or other successor-in-title to the owner of a Unit shall be liable for the payment of all Common Charges and any Special Assessments accrued and unpaid against such Unit prior to his or her acquisition thereof, except that, to the extent permitted by Law, a Permitted First Mortgagee acquiring title to a mortgaged Unit or a purchaser at a mortgage foreclosure sale held with respect to a Permitted First Mortgage shall not be liable, and such mortgaged Unit shall not be subject to a lien, for the payment of any Common Charges and Special Assessments assessed subsequent to the recording of such Permitted First Mortgage and prior to the acquisition of title to such Unit by the Permitted First Mortgagee or by such purchaser. However, in the event of a foreclosure of a Permitted First Mortgage (whether by sale, deed in lieu of foreclosure, or otherwise), the defaulting Unit Owner shall remain fully liable for the payment of all unpaid Common Charges and Special Assessments that accrued prior to such foreclosure. Any unpaid Common Charges and Special Assessments that are not collected

from such defaulting Unit Owner shall be deemed a Common Expense, collectible from all those who are Unit Owners at the time that the same is levied.

(C) Subject to the terms and conditions contained in these By-¬Laws, any Unit Owner may convey his or her Unit, together with its Appurtenant Interests, to the Condominium Board or to its designee, corporate or otherwise, on behalf of all Unit Owners, without being compensated therefor, and, in such event, be exempt from the payment of Common Charges and Special Assessments thereafter accruing, provided, however that: (i) all Common Charges and any Special Assessments then due and payable with respect to such Unit have been paid; (ii) such Unit is free and clear of all liens and encumbrances other than a Permitted First Mortgage and the statutory lien for unpaid Common Charges and Special Assessments; and (iii) no violation of any provision of the Condominium Documents then exists with respect to such Unit.

(D) No Unit Owner shall be exempted from liability for the payment of Common Charges or Special Assessments by waiving the use or enjoyment of any or all of the Common Elements or by abandoning his or her Unit (except with respect to a conveyance of the same to the Condominium Board, without compensation, pursuant to the terms of paragraph (C) hereof. Except as expressly provided to the contrary in paragraph (E) of Section 5.5 hereof, no Unit Owner shall be entitled to a diminution or abatement in the Common Charges or Special Assessments payable thereby for any inconvenience or discomfort arising from: (i) the failure or interruption of any utility or other services; (ii) the making of repairs or improvements to the Common Elements or any Unit (including, without limitation, such Unit Owner's Unit) pursuant to the terms of Sections 5.1, 5.2 or 5.3 hereof; or (iii) any action taken by the Condominium Board to comply with Law.

Section 6.3. Statement of Common Charges. The Condominium Board shall promptly provide a written statement of all unpaid Common Charges due from any Unit Owner upon its receipt of a written request therefor from such Unit Owner. In addition, each Unit Owner shall be permitted to examine the books of account of the Condominium at reasonable times on business days, but not more frequently than once a month.

Section 6.4. Default in Payment of Common Charges.

(A) In the event that any party defaults in performing any act or making any payment which is that party's responsibility hereunder and said default is not cured within fifteen (15) days of written notice of said default, then the Condominium Board shall take prompt action to collect any Common Charges due to the Condominium Board that remains unpaid for more than thirty days after the due date for the payment thereof. In connection therewith, the Condominium Board shall at its discretion or upon instruction by sponsor if sponsor is in control of the board, have the right and obligation to cause liens for all sums due and owing to the Condominium Board to be filed in the Register's Office pursuant to the terms of Section 399-z of the Condominium Act, to cause such liens to be foreclosed in the manner provided in Section 399-aa of the Condominium Act and/or to institute all other proceedings deemed necessary or desirable by the Condominium Board to recover all such unpaid Common Charges, together with all additional sums of money collectable by the Condominium Board by reason of such nonpayment pursuant to the terms of paragraph (B) hereof. A suit to recover a money judgment for unpaid Common Charges, however, shall be maintainable without foreclosing or waiving the lien securing such charges. In accordance

with Section 339-aa of the Real Property Law, the Sponsor while in control of the Board of Managers will cause the Board of Managers to file a lien on units in which the Sponsor is more than thirty (30) days in arrears of Common Charges.

(B) In the event that any Unit Owner shall fail to make prompt payment of Common Charges, such Unit Owner shall be obligated to pay a penalty charge equal to 10% of the outstanding charge, together with all costs and expenses paid or incurred by the Condominium Board, the Managing Agent, or the manager (if any) in connection with collecting such aforementioned lien, including, without limitation, reasonable attorneys' fees and disbursements and court costs. In addition, if the Condominium Board shall bring an action to foreclose the aforementioned lien, the defaulting Unit Owner shall be required to pay a reasonable rental for the use of his or her Unit, and the plaintiff in such foreclosure action shall be entitled to the appointment of a receiver to collect the same. All such interest, costs and expenses and rentals shall be added to and shall constitute Common Charges payable by such Unit Owner.

(C) In any action brought by the Condominium Board to foreclose a lien on a Unit because of unpaid Common Charges, the Condominium Board shall have, on behalf of all Unit Owners, the power to purchase such Unit at the foreclosure sale thereof and to acquire, hold, lease, mortgage, convey, or otherwise deal with such Unit (but not to vote the votes appurtenant to the same). In the event that the net proceeds received on such foreclosure (after deduction of all legal fees and disbursements, advertising costs, brokerage commissions, court costs and other costs and expenses paid or incurred in connection therewith) shall be insufficient to satisfy the defaulting Unit Owner's obligations to the Condominium, such Unit Owner shall remain liable for the deficit. Any surplus on such foreclosure sale shall be paid to the defaulting Unit Owner after first paying all liens on such Unit Owner's Unit in the order of priority of such liens.

Section 6.5. Failure by Non-Occupying Owner to Make Payments on its Unit

Section 339-kk of the Real Property Law of the State of New York (the "Condominium Act") applies to all condominium plans in existence after July 22, 1998. It is intended to provide financial protection for a condominium association if a non-occupying owner fails to make monthly payments for its units. The terms of Section 339-kk are as follows:

> For purposes of this section, "non-occupying owner" means a condominium unit owner who does not occupy the dwelling unit.
>
> If a non-occupying owner rents any dwelling unit to a rental tenant and then fails to make payments due for Common Charges, assessments or late fees for such unit within 60 days of the expiration of any grace period after they are due, the Condominium Board shall provide written notice to the tenant and the non-occupying owner that rental payments from the tenant shall be paid directly to the Condominium Board.
>
> Such notice shall provide that commencing immediately and until such time as all such payments are made current, all rental payments due subsequent to the issuance of such notice are to be made to the Condominium Association at the

address listed on the notice. However, where a majority of the Board of Managers has been elected by Unit Owners who are in occupancy, the Board may elect not to require that rental payments be made payable to the Condominium Board.

When such payments from the non-occupying owner are once again current, written notice of this fact shall be given within 3 business days to the rental tenant and non-occupying owner; thereafter, all rental payments shall be made payable to the non-occupying owner or a designated agent.

A non-occupying owner who disputes the Board's claim to rental payments pursuant to Section 339-kk shall be entitled to present facts supporting such position at the next scheduled meeting of the Board of Managers, which must be held within 30 days of the date that such Board receives notice that such owner seeks to dispute such claim.

Nothing in Section 339-kk shall limit any rights of Unit Owners or of the Condominium Board existing under any other law or agreement.

Payment by a rental tenant to the Condominium Board made in connection with Section 339-kk shall relieve that rental tenant from the obligation to pay such rent to the non-occupying owner and shall be an absolute defense in any non-payment proceeding commenced by such non-occupying owner against such tenant for such rent.

ARTICLE 7 SELLING AND LEASING OF UNITS

Section 7.1. General. Subject to the terms of Section 7.5 hereof, no Unit Owner may sell or lease his or her Unit except in compliance with, the applicable provisions of this Article 7. Any purported sale or lease consummated in default of the applicable terms hereof shall be voidable at the sole election of the Condominium Board, and, if the Condominium Board shall so elect, the selling or leasing Unit Owner shall be deemed to have authorized and empowered the Condominium Board to institute legal proceedings to eject the purported purchaser (in the event of an unauthorized sale) or to evict the purported tenant (in the event of an unauthorized leasing) in the name of the said Unit Owner as the owner or landlord, as the case may be. The said Unit Owner shall reimburse the Condominium Board for all costs and expenses paid or incurred in connection with such proceedings, including, without limitation, reasonable attorneys' fees and disbursements and court costs. Every lease shall be for a period of at least 30 days.

Section 7.2. No Severance of Ownership. No Unit Owner shall execute any deed or other instrument conveying title to his or her Unit without including therein its Appurtenant Interests, it being the intention to prevent any severance of such combined ownership. Any deed or other instrument purporting to affect one or more such interests shall be taken to include the interest or interests so omitted, even though the latter shall not be expressly mentioned or described therein. No part of the Appurtenant Interests of any Unit may be sold, conveyed, or otherwise disposed of, except as part of a sale, conveyance, or other disposition of the Unit to which such interests are appurtenant or as part of a sale, conveyance, or other disposition of such part of the Appurtenant

Interests of all Units. Nothing contained in this Section 7.2, however, shall prohibit the lease of any Unit without the simultaneous lease of its Appurtenant Interests. However, in no event shall any party which has use of the driveway be allowed to lease his interest in the driveway to a non-occupant of the property.

Section 7.3. Payment of Common Charges. No Unit Owner shall be permitted to convey or lease his or her Unit unless he or she shall have paid in full to the Condominium Board all unpaid Common Charges and Special Assessments theretofore assessed against such Unit and shall have satisfied all unpaid liens, other than that of Permitted Mortgages, levied against such Unit. Proceeds from lease payments may be used to satisfy the outstanding Common Charges.

Section 7.4. Power of Attorney. At the time of acquiring title to a Unit and as a condition thereof, the new Unit Owner shall duly execute, acknowledge and deliver to the representative of his or her title insurance company (or, if no such representative is present, to the Condominium Board) for recording in the Register's Office, the Unit Owner's Power of Attorney required in Article 14 of the Declaration, in the form set forth as Exhibit E to the Declaration.

Section 7.5. Transfers by Sale, Gifts and Devises, Etc. Any Unit Owner shall be free to sell, convey, gift or transfer his or her Unit, together with its Appurtenant Interests, or to devise the same by will or to have the same pass by intestacy, without restriction, provided, however, that each succeeding Unit Owner shall be bound by, and his or her Unit shall be subject to, all the provisions of this Declaration and By-Laws.

ARTICLE 8 MORTGAGING OF UNITS

Section 8.1. General. Each Unit Owner shall have the right to mortgage his or her Unit, subject only to the terms and conditions contained in Section 8.2 hereof. Any Unit Owner who mortgages his or her Unit, or the holder of such mortgage, shall supply the Condominium Board with the name and address of his or her mortgagee and shall file a confirmed copy of the note and mortgage with the Condominium Board. Any Unit Owner who satisfies a mortgage covering his or her Unit shall so notify the Condominium Board and shall file a conformed copy of the satisfaction of mortgage with the Condominium Board. The Secretary of the Condominium shall maintain such information in a book entitled "Mortgages of Units".

Section 8.2. Restrictions on Mortgaging.

(A) No Unit Owner shall be permitted to mortgage, pledge, or hypothecate his or her Unit unless and until he or she shall have paid in full to the Condominium Board all unpaid Common Charges and special assessments theretofore assessed against such Unit and shall have satisfied all unpaid liens, except the liens of Permitted Mortgages levied against such Unit.

(B) No Unit Owner shall execute any mortgage or other document mortgaging, pledging, or hypothecating title to his or her Unit without including therein its Appurtenant Interests, it being the intention to prevent any severance of such combined ownership. Any mortgage or other instrument purporting to affect one or more of such interests without including all such interests shall be deemed and taken to include the interest or interests so omitted, even

though the latter shall not be expressly mentioned or described therein.

(C) Any mortgage covering a Unit shall be substantially in the form of the New York statutory form of mortgage, except for such changes or additions thereto as may be required in order to permit a particular bank, trust company, insurance company, savings and loan association, or other institutional or non- institutional lender to make the mortgage loan or take an assignment thereof.

Section 8.3. Notice of Unpaid Common Charges and Default. Whenever requested in writing by a Permitted Mortgagee, the Condominium Board shall promptly report to such Permitted Mortgagee any default by his or her mortgagor(s) in the payment of Common Charges or Special Assessments or in the observance or performance of any of the provisions of the Condominium Documents as to which the Condominium Board has knowledge then exists. The Condominium Board shall, when giving notice to a Unit Owner of any such default, also send a copy of such notice to his or her Permitted Mortgagee, if so requested. However, the Condominium Board shall have no liability for any failure, through oversight or negligence, in notifying a Permitted Mortgagee of any default by his or her mortgagor under the Condominium' Documents, provided that (i) the Condominium Board shall advise such Permitted Mortgagee of the default promptly after discovering such failure and (ii) if the Condominium Board shall foreclose a lien on such mortgagor's Unit pursuant to the terms of Section 6.4 hereof by reason of such default, the Condominium Board shall pay to such Permitted Mortgagee any net proceeds of any foreclosure sale of such Unit (after retaining all sums due and owing to the Condominium Board pursuant to the Condominium Documents) or such lesser sum as shall be due and owing to such Permitted Mortgagee.

Section 8.4. Performance by Permitted Mortgagees. Any sum of money to be paid or any act to be performed by a Unit Owner pursuant to the terms of the Condominium Documents may be paid or performed by his or her Permitted Mortgagee, and the Condominium Board shall accept such Permitted Mortgagee's payment or performance with the same force and effect as if the same were paid or performed by such Unit Owner.

Section 8.5. Examination of Books. Each Permitted Mortgagee shall be permitted to examine the books of account of the Condominium at reasonable times on business days, but not more frequently than once a month.

Section 8.6 Additional Rights of Mortgagee.

A. If the Declaration and the By-Laws of the Condominium are to be amended and such amendment would materially interfere with any right or interest of any mortgagee such amendment may only be filed upon approval of 51% of all mortgagees.

B. In addition to any other notices provided for in the Declaration and By-Laws, Notices will be sent to any mortgagee, by certified or registered mail return receipt requested, upon the happening of any of the following circumstances to either the building or to a mortgaged unit:

(1) In the event that either (i) the Building or any part thereof is damaged or destroyed

by fire or other casualty (hereinafter referred to as a "Casualty Loss") or (ii) the Common Elements or any part thereof is taken in condemnation or by eminent domain (hereinafter referred to as a "Taking") in accordance with section 5.5 of the By-Laws.

In addition to notice in the event of any happening in this subsection (1), when applicable (i) no termination of condominium shall occur (whether because of casualty, condemnation or other reasons) without 51% mortgagee approval; and (ii) no use of the insurance proceeds for any purpose other than to rebuild shall occur without 51% mortgagee approval.

(2) In the event that any party, whose unit or interest is mortgaged to a mortgagee, defaults in performing any act or making any payment which is that party's responsibility hereunder, including Common Charges and or special assessments, for a period of sixty (60) days after the obligation to pay, and said default is not cured within fifteen (15) days of written notice of said default.

(3) If any insurance policies insuring the Building and all service machinery contained therein covering the interest of the Condominium, the Condominium Board, all of the Unit Owners and all Permitted Mortgagees, as their interests may appear may not be either cancelled, or be allowed to lapse, or substantially modified except upon at least ten (10) days' prior written notice to all of the insureds, including all Permitted Mortgagees.

(4) If the Declaration and the By-Laws of the Condominium are to be amended and such amendment would materially interfere with any right or interest of any mortgagee.

C. Notwithstanding the foregoing provisions in the event a mortgagee fails to respond to written notice within sixty (60) days of said written notice, provided notice was delivered by certified or registered mail return receipt requested said silence shall be construed as an implied approval by said mortgagee.

ARTICLE 9 CERTAIN REMEDIES

Section 9.1. Self Help. If any Unit Owner shall violate or breach any of the provisions of the Condominium Documents on his or her part to be observed or performed, including, without limitation, any breach of his or her obligation to paint, decorate, maintain, repair, or replace his or her Unit pursuant to the terms of Article 5 hereof, and shall fail to cure such violation or breach within five days after receipt of written notice of the same from the Condominium Board, the Managing Agent, or any manager (or, with respect to any violation or breach of the same not reasonably susceptible to cure within such period, to commence such cure within such five day period and, thereafter, to prosecute such cure with due diligence to completion), the Condominium Board shall have the right to enter such Unit Owner's Unit and summarily to abate, remove, or cure such violation or breach without thereby being deemed guilty or liable in any manner of trespass. In addition, in the event that the Condominium Board shall determine that the abatement, removal, or cure of any such violation or breach is immediately necessary for the preservation or safety of the Building or for the safety of the occupants of the Building or other individuals or is required to avoid the suspension of any necessary service in the Building, the Condominium Board may take such action immediately, without prior notice and without allowing the said Unit Owner

any period of time within which to cure or to commence to cure such violation or breach.

Section 9.2. Abatement and Enjoinment. In the event that any Unit Owner shall violate or breach any of the provisions of the Condominium Documents on his or her part to be observed or performed, the Condominium Board shall have the right to enjoin, abate, or remedy the continuance or repetition of any such violation or breach by appropriate proceedings brought either at law or in equity.

Section 9.3. Remedies Cumulative. The remedies specifically granted to the Condominium Board in this Article 9 or elsewhere in the Condominium Documents shall be cumulative, shall be in addition to all other remedies obtainable at law or in equity and may be exercised at one time or at different times, concurrently or in any order, in the sole discretion of the Condominium Board. Further, the exercise of any remedy shall not operate as a waiver, or preclude the exercise, of any other remedy.

Section 9.4. Costs and Expenses. All sums of money expended, and all costs and expenses incurred, by the Condominium Board in connection with the abatement, enjoinment, removal, or cure of any violation, breach, or default committed by a Unit Owner pursuant to the terms of Section 9.1 or paragraph (A) of Section 9.2 hereof or shall be immediately payable by such Unit Owner to the Condominium Board, which amount shall be paid within ten (10) days of receiving notice. In the event it is not paid within ten (10) days of receiving notice, a penalty charge equal to 10% of the outstanding charge shall be payable. All sums payable by a Unit Owner to the Condominium Board pursuant to the terms of this Section 9.3 shall, for all purposes hereunder, constitute Common Charges payable by such Unit Owner.

ARTICLE 10 ARBITRATION

Section 10.1. Procedure. Any matter or issue that may be resolved by arbitration pursuant to New York State law, or if there is a deadlock in any matter, must be submitted to arbitration administered by the American Arbitration Association under its Commercial Arbitration Rules. The arbitrator shall be a third party mutually agreed upon by the affected parties. No party may commence a proceeding in any other forum other than to enforce these arbitration provisions. The decision of the arbitrators so chosen shall be given within thirty (30) days after his or her selection or appointment. The decision shall be enforceable in a court of law of competent jurisdiction. In the event there is a deadlock in voting between the units, such deadlock shall be submitted to an arbitration board. The number of arbitrators shall be one. The place of arbitration shall be Brooklyn, New York and New York State law shall apply. The arbitration board is hereby given the power to cast a deciding vote in order to break any deadlock; and shall render an arbitration decision in accordance with the best interests of the Condominium. The determination of said arbitration shall be binding and legally enforceable by the parties and the Condominium Board shall follow the directions of the Arbitrators. The following language shall be signed to by the parties prior to the commencement of the arbitration proceedings (Note: capitalized terms shall have the meaning described to them in the Offering plans for The 1296 Park Place Condominium [the "Plan"]):

"We, the undersigned parties, hereby agree to submit to arbitration administered by

the American Arbitration Association under its Commercial Arbitration Rules the following controversy: [Describe controversy, issue, or matter in which there is a deadlock in voting]. We have not reached an agreement as to the [determination of the controversy, issue or vote]. Therefore, we are submitting the matter to the arbitration under these terms. We further agree that the above controversy be submitted to one arbitrator and that in so doing, we are giving up the right to bring suit in court including the right to a trial by jury, concerning the [determination of the controversy, issue or vote], except as provided by the rules of the arbitration forum in which the determination is sought. The place of the arbitration shall be Brooklyn, New York, and New York State law shall apply. We further agree that we will faithfully observe this agreement and the rules, that we will abide by and perform any decision and action rendered by the arbitrator, and that the decision shall be legally enforceable in any court having jurisdiction in this matter."

Section 10.2. Variation by Agreement. The parties to any dispute required or permitted to be resolved by arbitration pursuant to the terms of the Condominium Documents may, by written agreement, vary any of the terms of Section 10.1 hereof with respect to the arbitration of such dispute or may agree to resolve their dispute in any manner, including, without limitation, the manner set forth in Section 3031 of the New York Civil Practice Law and Rules and known as "New York Simplified Procedure for Court Determination of Disputes".

Section 10.3. Binding Effect. The decision in any arbitration conducted pursuant to the terms of Sections 10.1 and 10.2 hereof shall be binding upon all of the parties thereto and may be entered in any court of appropriate jurisdiction. Notwithstanding the foregoing, however, any arbitration held pursuant to the terms of the Condominium Documents with respect to a matter that arose prior to the first annual meeting of all Unit Owners held pursuant to the terms of Section 4.1 hereof shall be non-binding.

Section 10.4. Costs and Expenses.

(A) The fees, costs and expenses of the arbitrators shall be borne equally by the disputants. Each disputant shall also bear the fees and expenses of his or her counsel and expert witnesses.

(B) All costs and expenses paid or incurred by the Condominium Board in connection with any arbitration held hereunder, including, without limitation, the fees and expenses of counsel and expert witnesses, shall constitute Common Expenses.

ARTICLE 11 NOTICES

Section 11.1. General. All notices required or desired to be given hereunder shall be sent by registered or certified mail, return receipt requested, postage prepaid addressed:

A. if to the Condominium Board, to the Condominium Board at its principal office as set forth in Section 1.5 hereof, with a photocopy sent to the Managing Agent (if any) at its principal office address as aforesaid;

B. if to a Unit Owner, to such Unit Owner at his or her address at the Property; and

C. if to a Permitted Mortgagee, to such Permitted Mortgagee at its latest address designated in writing to the Condominium Board.

Any of the foregoing parties may change the address to which notices are to be sent or may designate additional addresses for the giving of notice, by sending written notice to the other parties as aforesaid. All notices sent pursuant to the terms of this Section 11.1 shall be deemed given when deposited in a United States Postal Service depository located in the State of New York enclosed in a sealed, postage prepaid wrapper, provided, however, that notices of change of address, notices designating additional addresses and notices deposited in a United State Postal Service depository located outside of the State of New York shall be deemed to have been given when received.

Section 11.2. Waiver of Service of Notice. Whenever any notice is required to be given by Law or pursuant to the terms of the Condominium Documents, a waiver thereof in writing, signed by the Person or Persons entitled to such notice, whether before or after the time stated therein, shall be deemed the equivalent thereof.

ARTICLE 12 AMENDMENTS TO BY-LAWS

Any provision of these By-Laws may be amended, modified, added to, or deleted by the affirmative vote of 66 2/3% of all Unit Owners either taken at a duly constituted meeting thereof or given in writing without a meeting as provided in Section 4.10 hereof. Each duly adopted amendment, modification, addition, or deletion hereof or hereto shall be effectuated in an instrument executed and recorded in the Register's Office by or on behalf of the Condominium Board as attorney-in-fact of all Unit Owners, which power-of-¬attorney shall be deemed irrevocable and coupled with an interest. Attached to each such instrument shall be an original, executed Secretary's Certification, certifying that the requisite number and percentage of Unit Owners approved the amendment, modification, addition, or deletion set forth therein either at a duly constituted meeting of Unit Owners or in writing without a meeting pursuant to the terms of Section 4.10 hereof, in which Secretary's Certification there shall be described the number and percentage of Unit Owners approving the same and, if voted at a meeting, the date, time and place of such meeting. No such amendment, modification, addition, or deletion shall be effective unless and until such an instrument shall be duly recorded in the Register's Office.

ARTICLE 13 FURTHER ASSURANCES

Section 13.1. General. Any Person that is subject to the terms of these By-laws, whether such Person is a Unit Owner, a lessee or sublessee of a Unit Owner, an occupant of a Unit, a member of the Condominium Board, an officer of the Condominium, or otherwise, shall, at the expense of any other Person requesting the same, execute, acknowledge and deliver to such other Person such instruments, in addition to those specifically provided for therein, and take such other action as such other Person may reasonable request in order either to effectuate the provisions of these By-Laws or any transaction contemplated herein or to confirm or perfect any right to be created or transferred hereunder or pursuant to any such transaction.

Section 13.2. Failure to Deliver or Act. If any Unit Owner or other Person that is subject to the terms of these By-Laws fails to execute, acknowledge, or deliver any instrument, or fails or refuses, within ten days after request therefor, to take any action that such Unit Owner or Person is required to execute, acknowledge and deliver or to take pursuant to these By-Laws, then the Condominium Board or its Managing Agent, is hereby authorized, as attorney-in-fact for such Unit Owner or other Person, coupled with an interest, to execute, acknowledge and deliver such instrument, or to take such action, in the name of such Unit Owner or other Person, and such document or action shall be binding on such Unit Owner or other Person.

ARTICLE 14 MISCELLANEOUS

Section 14.1. Inspection of Documents. Copies of the Declaration, these By-Laws, the Rules and Regulations and the Floor Plans, as the same may be amended from time to time, shall be maintained at the office of the Condominium Board and shall be available for inspection by Unit Owners and their authorized agents during reasonable business hours.

Section 14.2. Waiver. No provision contained in these By-Laws shall be deemed to have been abrogated or waived by reason of any failure to enforce the same, regardless of the number of violations or breaches that may occur.

Section 14.3. Conflicts. In the event that any provision of these By-Laws or of the Rules and Regulations shall be construed to be inconsistent with any provision of the Declaration or of the Condominium Act, the provision contained in the Declaration or in the Condominium Act shall control. All provisions of the Declaration and By-Laws are subject to any written agreement among the owners of the Units.

Section 14.4. Severability. If any provision of these By-Laws is invalid or unenforceable as against any Person or under certain circumstances, the remainder of these By-Laws and the applicability of such provision to other Persons or circumstances shall not be affected thereby. Each provision of these By-Laws shall, except as otherwise provided herein, be valid and enforced to the fullest extent provided by Law.

Section 14.5. Gender. A reference in these By-Laws to any one gender, masculine, feminine, or neuter, includes the other two, and the singular includes the plural, and vice-versa, unless the context otherwise requires.

Section 14.6. Captions. The index hereof and the captions herein inserted are included only as a matter of convenience and for reference, and in no way define, limit, or describe the scope of these By-Laws or the intent of any provision hereof.

ADDENDUM TO THE BY-LAWS OF

THE 1296 PARK PLACE CONDOMINIUM

RULES AND REGULATIONS

1. The sidewalks, entrances, passages, public halls, vestibules, corridors and stairways of or appurtenant to the Building shall not be obstructed or used in any manner to impede the ingress and egress to the units.

2. No article (including, but not limited to, garbage cans, bottles or mats) shall be placed or stored in any of the halls or on any of the staircases or fire tower landings of the Building, nor shall any fire exit thereof be obstructed in any manner.

3. Nothing shall be hung or shaken from any doors, window, or open terraces or patios, or placed upon the window sills, of the Building, and no Unit Owner shall sweep or throw, or permit to be swept or thrown, any dirt, debris or other substance therefrom.

4. There shall be no playing or lounging in the entrances, passages, public halls, vestibules, corridors, stairways, or fire towers of the Building, except in recreational areas or other areas designated as such in the Declaration or by the Condominium Board.

5. The Condominium Board or the Managing Agent may, from time to time, curtail or relocate any portion of the Common Elements devoted to storage, recreation, or service purposes in the Building.

6. Nothing shall be done or be kept in any Unit or in the Common Elements that will increase the rate of insurance of the Building, or the contents thereof, without the prior written consent of the Condominium Board. No Unit Owner shall permit anything to be done or kept in his or her Unit or in the Common Elements that will result in the cancellation of insurance on the Building, or the contents thereof, or that would be in violation of any Law. No Unit Owner or any of his or her Family Members, agents, servants, employees, licensees, or visitors shall, at any time, bring into or keep in his or her Unit any inflammable, combustible, or explosive fluid, material, chemical, or substance, except as shall be necessary and appropriate for the permitted uses of such Unit.

7. There shall be no barbecuing in the Units, or in the Common Elements, except for those areas (if any) specifically designated for barbecuing by the Condominium Board. Porches, decks and backyards, if any, are designated for barbecuing.

8. No Unit Owner shall make, cause, or permit any unusual, disturbing, or objectionable noises (except for noises made by children under the age of ten (10) years) or odors to be produced upon or to emanate from his or her Unit or permit anything to be done therein that will interfere with the rights, comforts, or conveniences of the other Unit Owners. No Unit Owner shall play upon or suffer to be played upon any musical instrument, or shall operate or permit to be

operated a phonograph, radio, television set, or other loudspeaker in such Unit Owner's Unit between midnight and the following 8:00 A.M., if the same shall disturb or annoy other occupants of the Building, and in no event shall any Unit Owner practice or suffer to be practiced either vocal or instrumental music between the hours of 10:00 P.M. and the following 9:00 A.M. The manner of dress of each unit owner, his family and guests and invitees shall be modest and inoffensive to the majority of the unit owners. No construction, repair work, or other installation involving noise shall be conducted in any Unit except on weekdays (not including legal holidays) and only between the hours of 8:00 A.M. and 5:00 P.M., unless such construction or repair work is necessitated by an emergency.

9. Smoking, which includes carrying, burning, or otherwise handling or controlling any lit or smoldering product containing tobacco or cloves, including but not limited to cigarettes, cigars, pipes or electronic cigarettes, shall be permitted only inside a Unit or in an outdoor Limited Common Element that is connected to a Unit. Smoking anywhere else in the Condominium shall be prohibited, including, but not limited to, in indoor and outdoor Common Elements. No Unit Owner shall smoke, or permit smoking by any occupant, agent, tenant, invitee, guest, friend, or family member anywhere on the property except in their Unit or in any outdoor Limited Common Element that is connected to the Unit. Smoking in violation of this rule shall constitute a nuisance pursuant to the terms and provisions of the By-Laws and shall be subject to a fine as reasonably determined by the Condominium Board.

10. All radio, television, or other electrical equipment of any kind or nature installed or used in each Unit shall fully comply with all rules, regulations, requirements, or recommendations of the New York Board of Fire Underwriters and the public authorities having jurisdiction, and the Unit Owner alone shall be liable for any damage or injury caused by any radio, television, or other electrical equipment.

11. Water-closets and other water apparatus in the Building shall not be used for any purpose other than those for which they were designed, and no sweepings, rubbish, rags or any other article shall be thrown into the same. Any damage resulting from misuse of any water-closets or other apparatus in a Unit shall be repaired and paid for by the owner of such Unit.

12. Each Unit Owner shall keep his or her Unit in a good state of preservation, condition, repair and cleanliness in accordance with the terms of the By-Laws.

13. The agents of the Condominium Board or the Managing Agent and any contractor or workman authorized by the Condominium Board or the Managing Agent, may enter any room or Unit at any reasonable hour of the day, on at least one day's prior notice to the Unit Owner, for the purpose of inspecting such Unit for the presence of any vermin, insects, or other pests and for the purpose of taking such measures as may be necessary to control or exterminate any such vermin, insects or other pests; however, such entry, inspection and extermination shall be done in a reasonable manner so as not to unreasonably interfere with the use of such Unit for its permitted purposes.

14. The Condominium Board or the Managing Agent may retain a pass-key to each Unit. If any lock is altered or a new lock is installed, the Condominium Board or the Managing Agent shall

be provided with a key thereto immediately upon such alteration or installation. If the Unit Owner is not personally present to open and permit an entry to his or her Unit at any time when an entry there is necessary or permissible under these Rules and Regulations or under the By-Laws, and has not furnished a key to the Condominium Board or the Managing Agent, then the Condominium Board or Managing Agent or their agents (but, except in an emergency, only when specifically authorized by an officer of the Condominium or an officer of the Managing Agent) may forcibly enter such Unit without liability for damages or trespass by reason thereof (if, during such entry, reasonable care is given to such Unit Owner's property).

15. If any key or keys are entrusted by a Unit Owner, by any Family Member thereof, or by his or her agent, servant, employee, licensee, or visitor to an employee of the Condominium or of the Managing Agent, whether for such Unit Owner's Unit or an automobile, trunk, or other item of personal property, the acceptance of the key shall be at the sole risk of such Unit Owner, and neither the Condominium Board nor the Managing Agent shall (except as otherwise provided herein) be liable for injury, loss or damage of any nature whatsoever, directly or indirectly resulting therefrom or connected therewith.

16. Unit Owners and their respective Family Members, guests, servants, employees, agents, visitors, or licensees shall not at any time or for any reason whatsoever enter upon, or attempt to enter upon, the roof of the Building.

17. No occupant of the Building shall send any employee of the Condominium or of the Managing Agent out of the Building on any private business.

18. Any consent or approval given under these Rules and Regulations may be amended, modified, added to, or repealed at any time by resolution of the Condominium Board. Further, any such consent or approval may, in the discretion of the Condominium Board or the Managing Agent, be conditional in nature.

19. Complaints regarding the service of the Condominium shall be made in writing to the Condominium Board or to the Managing Agent.

20. Each Unit Owner shall notify the Condominium Board or the Managing Agent, if any, in writing when a child or children, under the age of eleven (11) years lives or resides (even temporarily) in the Unit. Each Unit owner shall install at such Unit Owner's expense, the required window guards (or safety "stops" in lieu of window guards, designed specifically to prevent a child from falling out of the window) in all windows of the Unit in compliance with all applicable New York City Administrative code requirements. The Unit Owner should maintain all window guards (or stops) installed in the Unit and shall not remove same until permitted by applicable law and in any event, without prior written notice to the Condominium Board or the Managing Agent.

DOCUMENT NUMBER 8

ARTICLE 36-B OF THE GENERAL BUSINESS LAW

WARRANTIES ON THE SALE OF NEW HOMES

GENERAL BUSINESS LAW
Article 36-B
WARRANTIES ON SALES OF NEW HOMES

§ 777. Definitions.

As used in this article, the following terms shall have the following meanings:

1. "Builder" means any person, corporation, partnership or other entity contracting with an owner for the construction or sale of a new home.

2. "Building code" means the uniform fire prevention and building code promulgated under section three hundred seventy-seven of the executive law, local building code standards approved by the uniform fire prevention and building code council under section three hundred seventy-nine of the executive law, and the building code of the city of New York, as defined in title twenty-seven of the administrative code of the city of New York.

3. "Constructed in a skillful manner" means that workmanship and materials meet or exceed the specific standards of the applicable building code. When the applicable building code does not provide a relevant specific standard, such term means that workmanship and materials meet or exceed the standards of locally accepted building practices.

4. "Material defect" means actual physical damage to the following load-bearing portions of the home caused by failure of such load-bearing portions which affects their load-bearing functions to the extent that the home becomes unsafe, unsanitary or otherwise unliveable: foundation systems and footings, beams, girders, lintels, columns, walls and partitions, floor systems, and roof framing systems.

5. "New home" or "home" means any single family house or for-sale unit in a multi-unit residential structure of five stories or less in which title to the individual units is transferred to owners under a condominium or cooperative regime. Such terms do not include dwellings constructed solely for lease, mobile homes as defined in section seven hundred twenty-one of this chapter, or any house or unit in which the builder has resided or leased continuously for three years or more following the date of completion of construction, as evidenced by a certificate of occupancy.

6. "Owner" means the first person to whom the home is sold and, during the unexpired portion of the warranty period, each successor in title to the home and any mortgagee in possession. Owner does not include the builder of the home or any firm under common control of the builder.

7. "Plumbing, electrical, heating, cooling and ventilation systems" shall mean:

a. in the case of plumbing systems: gas supply lines and fittings; water supply, waste and vent pipes and their fittings; septic tanks and their drain fields; water, gas and sewer service piping, and their
extensions to the tie-in of a public utility connection, or on-site well and sewage disposal system;

b. in the case of electrical systems: all wiring, electrical boxes, switches, outlets and connections up to the public utility connection; and

c. in the case of heating, cooling and ventilation systems: all duct work, steam, water and refrigerant lines, registers, convectors, radiation elements and dampers.

8. "Warranty date" means the date of the passing of title to the first owner for occupancy by such owner or such owner's family as a residence, or the date of first occupancy of the home as a residence, whichever first occurs.

§ 777-a. Housing merchant implied warranty.

1. Notwithstanding the provisions of section two hundred fifty-one of the real property law, a housing merchant implied warranty is implied in the contract or agreement for the sale of a new home and shall survive the passing of title. A housing merchant implied warranty shall mean that:

a. one year from and after the warranty date the home will be free from defects due to a failure to have been constructed in a skillful manner;

b. two years from and after the warranty date the plumbing, electrical, heating, cooling and ventilation systems of the home will be free from defects due to a failure by the builder to have installed such systems in a skillful manner; and

c. six years from and after the warranty date the home will be free from material defects.

2. Unless the contract or agreement by its terms clearly evidences a different intention of the seller, a housing merchant implied warranty does not extend to:

a. any defect that does not constitute

(i) defective workmanship by the builder or by an agent, employee or subcontractor of the builder,

(ii) defective materials supplied by the builder or by an agent, employee or subcontractor of the builder, or

(iii) defective design provided by a design professional retained exclusively by the builder; or

b. any patent defect which an examination ought in the circumstances to have revealed, when the buyer before taking title or accepting construction as complete has examined the home as fully as the buyer desired, or has refused to examine the home.

3. In the case of goods sold incidentally with or included in the sale of the new home, such as stoves, refrigerators, freezers, room air conditioners, dishwashers, clothes washers and dryers, a housing merchant implied warranty shall mean that such goods shall be free from defects due to failure by the builder or any agent, employee or subcontractor of the builder to have installed such systems in a skillful manner. Merchantability, fitness and all other implied warranties with respect to goods shall be governed by part three of article two of the uniform commercial code and other applicable statutes.

4. a. Written notice of a warranty claim for breach of a housing merchant implied warranty must be received by the builder prior to the commencement of any action under paragraph b of this subdivision and no later than thirty days after the expiration of the applicable warranty period, as described in subdivision one of this section. The owner and occupant of the home shall afford the builder reasonable opportunity to inspect, test and repair the portion of the home to which the warranty claim relates.

b. An action for damages or other relief caused by the breach of a housing merchant implied warranty may be commenced prior to the expiration of one year after the applicable warranty period, as described in subdivision one of this section, or within four years after the warranty date, whichever is later. In addition to the foregoing, if the builder makes repairs in response to a warranty claim under paragraph a of this subdivision, an action with respect to such claim may be commenced within one year after the last date on which such repairs are performed. The measure of damages shall be the reasonable cost of repair or replacement and property damage to the home proximately caused by the breach of warranty, not to exceed the replacement cost of the home exclusive of the value of the land, unless the court finds that, under the circumstances, the diminution in value of the home caused by the defect is a more equitable measure of damages.

c. In addition to any other period for the commencement of an action permitted by law, an action for contribution or indemnification may be commenced at any time prior to the expiration of one year after the entry of judgment in an action for damages under paragraph b of this subdivision.

5. Except as otherwise provided in section seven hundred seventy-seven-b of this article, any provision of a contract or agreement for the sale of a new home which excludes or modifies a housing merchant implied warranty shall be void as contrary to public policy.

6. Except as otherwise provided in section seven hundred seventy-seven-b of this article, other implied warranties may arise from the terms of the contract or agreement or from course of dealing or usage of trade.

§ 777-b. Exclusion or modification of warranties.

1. Except in the case of a housing merchant implied warranty, the builder or seller of a new home may exclude or modify all warranties by any clear and conspicuous terms contained in the written contract or agreement of sale which call the buyer's attention to the exclusion or modification of warranties and make the exclusion or modification plain.

2. Except in the case of a housing merchant implied warranty, the builder or seller of a new home may exclude or modify warranties with respect to particular defects by any clear and conspicuous terms contained in the written contract or agreement of sale which identify such defects, call the buyer's attention to the exclusion or modification of warranties and make the exclusion or modification plain.

3. A housing merchant implied warranty may be excluded or modified by the builder or seller of a new home only if the buyer is offered a limited warranty in accordance with the provisions of this subdivision.

a. A copy of the express terms of the limited warranty shall be provided in writing to the buyer for examination prior to the time of the buyer's execution of the contract or agreement to purchase the home.

b. A copy of the express terms of the limited warranty shall be included in, or annexed to and incorporated in, the contract or agreement.

c. The language of the contract or agreement for sale of the home must conspicuously mention the housing merchant implied warranty and provide that the limited warranty excludes or modifies the implied warranty. Language to exclude all implied warranties is sufficient if it states, for example, that "There are no warranties which extend beyond the face hereof."

d. The limited warranty shall meet or exceed the standards provided in subdivisions four and five of this section.

4. A limited warranty sufficient to exclude or modify a housing merchant implied warranty must be written in plain English and must clearly disclose:

a. that the warranty is a limited warranty which limits implied warranties on the sale of the home; the words "limited warranty" must be clearly and conspicuously captioned at the beginning of the warranty document;

b. the identification of the names and addresses of all warrantors;

c. the identification of the party or parties to whom the warranty is extended and whether it is extended to subsequent owners; the limited warranty must be extended to the first owner of the home and survive the passing of title but may exclude any or all subsequent owners;

d. a statement of the products or parts covered by the limited warranty;

e. the clear and conspicuous identification of any parts or portions of the home or premises that are excepted or excluded from warranty coverage, and the standards that will be used to determine whether a defect has occurred; provided, however, that:

i. any exception, exclusion or standard which does not meet or exceed a relevant specific standard of the applicable building code, or in the absence of such relevant specific standard a locally accepted building practice, shall be void as contrary to public policy and shall be deemed to establish the applicable building code standard or locally accepted building practice as the warranty standard; and

ii. any exception, exclusion or standard that fails to ensure that the home is habitable, by permitting conditions to exist which render the home unsafe, shall be void as contrary to public policy.

f. what the builder and any other warrantor will do when a defect covered by the warranty does arise, and the time within which the builder and any other warrantor will act;

g. the term of the warranty coverage and when the term begins, provided, however, that such term shall be equal to or exceed the warranty periods of a housing merchant implied warranty, as defined in subdivision one of section seven hundred seventy-seven-a of this article;

h. step-by-step claims procedures required to be undertaken by the owner, if any, including directions for notification of the builder and any other warrantor; an owner shall not be required to submit to binding arbitration or to pay any fee or charge for participation in non-binding arbitration or any mediation process;

i. any limitations on or exclusions of consequential or incidental damages, and any limitations on the builder's and other warrantor's total liability, conspicuously expressed on the first page of the warranty. Notwithstanding the foregoing, a limited warranty shall not be construed to permit any limitation on or exclusion of property damage to the home proximately caused by a breach of the limited warranty, where the court finds that such limitation or exclusion would cause the limited warranty to fail of its essential purpose, except that such property damage may be limited by an express limitation on the builder's or other warrantor's total liability in accordance with the provisions of this paragraph.

5. a. This article shall not be construed to authorize or validate any covenant, promise, agreement or understanding which is void and unenforceable under section 5-322.1 of the general obligations law.

b. This article shall preempt any local law inconsistent with the provisions of this article. This article shall not preempt any builder subject to its provisions from complying with any local law with respect to the regulation of home builders except as expressly provided herein.

c. Nothing in this article shall be construed to repeal, invalidate, supersede or restrict any right, liability or remedy provided by any other statute of the state, except where such construction would, as a matter of law, be unreasonable.

DOCUMENT NUMBER 9

FORM OF ESCROW AGREEMENT

ESCROW AGREEMENT

AGREEMENT made this _____ day of _____, 20_____, by and among _____ ("PURCHASER"), 1296 PARK PLACE PH LLC ("SPONSOR"), as sponsor of The 1296 Park Place Condominium offering plan ("Plan") and The Law Office of Jay Lichtman P.C. ("ESCROW AGENT").

WHEREAS, SPONSOR has filed the Offering Plan with the Attorney General to offer for sale condominium ownership interests at the premises located at 1296 Park Place, Brooklyn, NY subject to the terms and conditions set forth in the Plan; and

WHEREAS, ESCROW AGENT is authorized to act as an escrow agent hereunder in accordance with New York General Business Law ("GBL") Sections 352-e(2-b), 352-h and the New York Department of Law's regulations promulgated thereunder; and

WHEREAS, SPONSOR and PURCHASER desire that ESCROW AGENT act as escrow agent for deposits, down payments, and advances (referred to herein as "Deposit") pursuant to the terms of this Agreement.

NOW, THEREFORE, in consideration of the covenants and conditions contained herein and other good and valuable consideration, the parties hereby agree as follows:

1. ESTABLISHMENT OF THE ESCROW ACCOUNT.

1.1. ESCROW AGENT has established an escrow account for the purpose of holding the Deposit made by PURCHASER pursuant to that certain purchase agreement for the purchase and sale of unit _____ (the "Purchase Agreement") at Chase Bank N.A. located at 136 Front Street, Brooklyn, New York 11201 ("Bank"), a bank authorized to do business in the State of New York. The escrow account is entitled "Law Office of Jay Lichtman P.C. Attorney Escrow Account" ("Escrow Account"). [The account number is _____.]

1.2 ESCROW AGENT has designated the following attorneys to serve as signatories: Jay Lichtman, Esq. All designated signatories are admitted to practice law in the State of New York and have an address of 68 Jay Street, Suite 420, Brooklyn, New York 11201, and a telephone number of (347) 504-1724.

1.3 ESCROW AGENT and all authorized signatories hereby submit to the jurisdiction of the State of New York and its Courts for any cause of action arising out of this Agreement or otherwise concerning the maintenance of or release of the Deposit from escrow.

1.4 Neither ESCROW AGENT nor any authorized signatories on the Escrow Account are the Sponsor, Selling Agent, Managing Agent (as those terms are defined in the Plan), or any principal thereof, or have any beneficial interest in any of the foregoing .

1.5 The Escrow Account is an IOLA account with no interest accrued to the benefit of the either the Sponsor or the purchaser. An IOLA account is a special segregated escrow account maintained by an attorney in which the interest earned is paid to the State of New York. It is not anticipated that any interest will be earned thereon. If at some future point, the Offering Plan is amended to provide that the account will be a non-IOLA account, then the interest rate for all deposits made into the Escrow Account shall be the prevailing rate for such accounts. Interest shall begin to accrue upon placing the deposit into the Escrow Account. All interest earned thereon shall be paid to or credited to the Purchaser at closing. No fees of any kind may be deducted from the Escrow Account, and the Sponsor shall bear all costs associated with the maintenance of the Escrow Account.

2. DEPOSITS INTO THE ESCROW ACCOUNT.

2.1 All Deposits received from PURCHASER prior to closing, whether in the form of checks, drafts, money orders, wire transfers, or other instruments which identify the payor, shall be placed into the Escrow Account. All instruments to be placed into the Escrow Account shall be made payable directly to the order of "Law Office of Jay Lichtman, P.C., as Escrow Agent", pursuant to the terms set forth in the Plan. Any instrument payable to, or endorsed other than as required hereby, and which cannot be deposited into such Escrow Account, shall be returned to PURCHASER promptly, but in no event more than five (5) business days following receipt of such instrument by ESCROW AGENT. In the event of such return of the Deposit, the instrument shall be deemed not to have been delivered to ESCROW AGENT pursuant to the terms of this Agreement.

2.2 Within five (5) business days after the Purchase Agreement has been tendered to ESCROW AGENT along with the DEPOSIT, ESCROW AGENT shall place the DEPOSIT into the Escrow Account. Within ten (10) business days of placing the DEPOSIT in the Escrow Account, ESCROW AGENT shall provide written notice to Purchaser and Sponsor, confirming the Deposit. Such notice shall set forth the Bank, the account number, and the initial interest rate earned thereon. If the PURCHASER does not receive notice within fifteen (15) business days after tender of the Deposit, the PURCHASER may cancel the Purchase Agreement within ninety (90) days after tender of the Deposit. Complaints concerning the failure to honor such cancellation requests may be referred to the New York State Department of Law, Real Estate Finance Bureau, 120 Broadway, 23rd Floor, New York, NY 10271. Rescission shall not be afforded where proof satisfactory to the Attorney General is

submitted establishing that the Deposit was timely placed in the Escrow Account in accordance with the New York State Department of Law's regulations concerning the Deposit and requisite notice was timely mailed to the Purchaser.

3. RELEASE OF FUNDS

3.1 Under no circumstances shall SPONSOR seek or accept release of the Deposit of PURCHASER to SPONSOR until after consummation of the Plan, as evidenced by the acceptance of a post-closing amendment by the New York State Department of Law. Consummation of the Plan shall not relieve SPONSOR or ESCROW AGENT of any obligation to PURCHASER as set forth in GBL §§ 352-e(2-b) and 352-h.

3.2 ESCROW AGENT shall release the Deposit to PURCHASER or SPONSOR as directed:

3.2.1 pursuant to terms and conditions set forth in the Purchase Agreement and this Agreement, upon closing of title to the unit;

3.2.2 in a subsequent writing signed by both SPONSOR and PURCHASER; or

3.2.3 by a final, non-appealable order or judgment of a court.

3.3 If Escrow Agent is not directed to release the Deposit pursuant to paragraph 3.2 above, and Escrow Agent receives a request by either SPONSOR or PURCHASER to release the Deposit, then Escrow Agent must give both the Purchaser and Sponsor prior written notice of not fewer than thirty (30) days before releasing the Deposit. If Escrow Agent has not received notice of objection to the release of the Deposit prior to the expiration of the thirty (30) day period, the Deposit shall be released and Escrow Agent shall provide further written notice to both PURCHASER and SPONSOR informing them of said release. If Escrow Agent receives a written notice from either PURCHASER or SPONSOR objecting to the release of the Deposit within said thirty (30) day period, Escrow Agent shall continue to hold the Deposit until otherwise directed pursuant to paragraph 3.2 above. Notwithstanding the foregoing, Escrow Agent shall have the right at any time to deposit the Deposit contained in the Escrow Account with the Clerk of the county where the unit is located and shall give written notice to both SPONSOR and PURCHASER of such deposit.

3.4 Sponsor shall not object to the release of the Deposit to:

3.4.1 Purchaser, if Purchaser timely rescinds in accordance with an offer of rescission contained in the Plan or an Amendment to the Plan; or

3.4.2 Purchaser after an Amendment abandoning the Plan is accepted for filing by the New York State Department of Law.

4. RECORDKEEPING.

4.1 ESCROW AGENT shall maintain all records concerning the Escrow Account for seven years after release of the Deposit.

4.2 Upon the dissolution of the law firm which was ESCROW AGENT, the former partners or members of the firm shall make appropriate arrangements for the maintenance of these records by one of the partners or members of the firm or by the successor firm and shall notify the New York State Department of Law of such transfer.

4.3 ESCROW AGENT shall make available to the Attorney General, upon request, all books and records of ESCROW AGENT relating to the funds deposited and disbursed hereunder.

5. GENERAL OBLIGATIONS OF ESCROW AGENT.

5.1 ESCROW AGENT shall maintain the Escrow Account under its direct supervision and control.

5.2 A fiduciary relationship shall exist between ESCROW AGENT and PURCHASER, and ESCROW AGENT acknowledges its fiduciary and statutory obligations pursuant to GBL§§ 352-e(2-b) and 352-h.

5.3 ESCROW AGENT may rely upon any paper or document which may be submitted to it in connection with its duties under this Agreement and which is believed by ESCROW AGENT to be genuine and to have been signed or presented by the proper party or parties and shall have no liability or responsibility with respect to the form, execution, or validity thereof.

6. RESPONSIBILITIES OF SPONSOR.

6.1 SPONSOR agrees that it shall not interfere with ESCROW AGENT'S performance of its fiduciary duties and statutory obligations as set forth in GBL §§ 352-e(2-b) and 352-h and the New York State Department of Law's regulations.

6.2 SPONSOR shall obtain or cause the selling agent under the Plan to obtain a completed and signed Form W-9 or W-8, as applicable, from PURCHASER

and deliver such form to ESCROW AGENT together with the Deposit and Purchase Agreement.

7. TERMINATION OF AGREEMENT.

7.1 This Agreement shall remain in effect unless and until it is canceled by either:

7.1.1 Written notice given by SPONSOR to ESCROW AGENT of cancellation of designation of ESCROW AGENT to act in said capacity, which cancellation shall take effect only upon the filing of an amendment to the Plan with the Department of Law providing for a successor escrow agent that meets the requirements set forth in applicable regulations of the New York State Department of Law. PURCHASER shall be deemed to have consented to such cancellation;

7.1.2 The resignation of ESCROW AGENT, which shall not take effect until ESCROW AGENT is replaced by a successor escrow agent that meets the requirements set forth in applicable regulations of the New York State Department of Law, and notice is given to PURCHASER of the identity of the successor escrow agent, the Bank in the State of New York where the Deposit is being held, and the account number therefor.

7.2 Upon termination of the duties of ESCROW AGENT as described in paragraph 7.1.1 or 7.1.2 above, ESCROW AGENT shall deliver the Deposit held by ESCROW AGENT and the Purchase Agreement and any other documents maintained by ESCROW AGENT relating to the Deposit to the successor escrow agent.

8. SUCCESSORS AND ASSIGNS.

This Agreement shall be binding upon SPONSOR, PURCHASER, and ESCROW AGENT and their respective successors and assigns.

9. GOVERNING LAW.

This Agreement shall be construed in accordance with and governed by the laws of the State of New York.

10. ESCROW AGENT'S COMPENSATION.

Prior to release of the Deposit, ESCROW AGENT'S fees and disbursements shall neither be paid by SPONSOR from the Deposit nor deducted from the Deposit by any financial institution under any circumstance.

11. SEVERABILITY.

If any provision of this Agreement or the application thereof to any person or circumstance is determined to be invalid or unenforceable, the remaining provisions of this Agreement or the application of such provision to other persons or to other circumstances shall not be affected thereby and shall be valid and enforceable to the fullest extent permitted by law.

12. INDEMNIFICATION.

SPONSOR agrees to defend, indemnify, and hold ESCROW AGENT harmless from and against all costs, claims, expenses, and damages incurred in connection with or arising out of this Agreement or the performance or non-performance of ESCROW AGENT'S duties under this Agreement, except with respect to actions or omissions taken or suffered by ESCROW AGENT in bad faith or in willful disregard of this Agreement or involving gross negligence of ESCROW AGENT. This indemnity includes, without limitation, disbursements and attorneys' fees either paid to retain attorneys or representing the hourly billing rates with respect to legal services rendered by ESCROW AGENT to itself.

[THE REMAINDER OF THIS PAGE INTENTIONALLY LEFT BLANK.]

13. ENTIRE AGREEMENT.

This Agreement, read together with GBL §§ 352-e(2-b) and 352-h and the New York State Department of Law's regulations, constitutes the entire agreement between the parties with respect to the subject matter hereof.

IN WITNESS WHEREOF, the undersigned have executed this Agreement as of the day and year first written above.

PURCHASER
[INSERT NAME]

By: _____
Name: _____
Title: _____

ESCROW AGENT:
The Law Office of Jay Lichtman P.C.

By: _____
Jay Lichtman, Esq

SPONSOR: 1296 PARK PLACE PH LLC

By: _____
Name: Zaur Laven
Title: Principal of Sponsor

SPONSOR: 1296 PARK PLACE PH LLC

By: _____
Name: Reuven Rothstein
Title: Principal of Sponsor

DOCUMENT NUMBER 10

FORM OF LEASE AGREEMENT

UNIT OWNER'S POWER OF ATTORNEY

THE 1296 PARK PLACE CONDOMINIUM

Any terms used in this Unit Owner's Power of Attorney that are used (a) in the Declaration establishing a plan for condominium ownership of the premises known as The 1296 Park Place Condominium and by the street number 1296 Park Place , Brooklyn, New York, under Article 9-B of the Real Property Law of the State of New York, dated _____ and recorded in the Kings County office of the Register in The City of New York (hereinafter referred to as "Declaration"), or (b) in the By-Laws of The 1296 Park Place Condominium (hereinafter referred to as the "By-Laws") attached to, and recorded together with, the Declaration, shall have the same meanings in this Unit Owner's Power of Attorney as in the Declaration or the By-Laws.

The undersigned, _____, with an address of 1296 Park Place, Unit ____, Brooklyn, NY 11213, the owner(s) of Condominium Unit No. __ in the Condominium known as The 1296 Park Place Condominium, consisting of the property submitted to the provisions of Article 9-B of the Real Property Law of the State of New York, pursuant to Declaration recorded the ___ day of _____, in the Kings County Office of the Register, under CFRN # _____ and in the floor plan of file as Condo Plan No. _____, do hereby irrevocably nominate, constitute and appoint the persons who may from time to time constitute the condominium Board of Managers of The 1296 Park Place Condominium jointly true and lawful attorneys-in-fact for the undersigned, coupled with an interest, with powers of substitution, to acquire in their own name, as members of the Board of Managers, or in the name of their designee, corporate or otherwise, on behalf of all Owners of Units whose Owner in said Property, in accordance with their Common Interests, any Unit whose owner desired to abandon or sell the same, the undivided interest in the Common Elements appurtenant thereto, the interest of such Unit Owner in any other Units theretofore acquired by the Board of Managers, or its designee, on behalf of all Unit Owners, or in the proceeds of sale of such Unit Owner in any other Units theretofore acquired by the Board of Managers or its designee on behalf of all Unit Owners in all other assets of the Condominium as defined in the aforementioned Declaration, or any Unit, which shall be the subject of a foreclosure or other judicial sale, or to lease any Unit whose Owner desires to rent the same, at such price or on such rental, as the case may be, and on such terms as said attorneys-in-fact may determine, granting to such attorneys-in-fact the power to do all things in the said premises which the undersigned could do, if the undersigned were personally present. In more particular delineation of, but not in derogation or limitation of, the power set forth above, the Board of Managers, notwithstanding bankruptcy of any Unit Owner, specifically has the power to do any act or thing, and execute any document necessary to effectuate the purposes set forth in the Declaration referenced above including but not limited to, Amendment of said Declaration, execution of the Deed conveying condominium property, filing for a severance of tax lots, and any other document or thing reasonable or necessary to effectuate the aforementioned purposes.

The acts of majority of such persons shall constitute the acts of said attorneys-in-fact.

The Power of Attorney shall be irrevocable.

IN WITNESS WHEREOF, the undersigned have executed this Unit Owner's Power of Attorney as of the ____ day of _____.

_____

STATE OF NEW YORK)
COUNTY OF KINGS) SS:

On the ____ day of _____ in the year 20___ before me, the undersigned, a notary public in and for said state, personally appeared _____, personally known to me or proved to me on the basis of satisfactory evidence to be the individual(s) whose name(s) is (are) subscribed to the within instrument and acknowledged to me that he/she/they executed the same in his/her/their capacity(ies), and that by his/her/their signature(s) on the instrument, the individual(s) acted, executed the instrument.

_____
Notary Public

POWER OF ATTORNEY

_____

TO

THE BOARD OF MANAGERS OF
THE 1296 PARK PLACE CONDOMINIUM

Premises:

1296 Park Place, Unit ___
Brooklyn, NY 11213

County: Kings

Section:

Block: _____

Lot: _____

Record and return to:

_____

_____

INTERIM LEASE

AGREEMENT made this _____ day of _____, 20___, between, 1296 Park Place PH LLC (hereafter SPONSOR) and _____, (hereinafter PURCHASER);

W I T N E S S E T H :

WHEREAS, SPONSOR is the Sponsor of a condominium conversion of premises located at 1296 Park Place, Brooklyn, New York 11213; and,

WHEREAS, PURCHASER has executed a Purchase Agreement for Unit _____ at said premises; and,

WHEREAS, PURCHASER wishes to occupy said apartment prior to the closing of the transaction;

NOW, THEREFORE, in conformity with the terms and conditions of the Offering Plan filed with the Attorney General of the State of New York, the parties agree as follows:

1. Commencing on the date of the execution of the Purchase Agreement, and terminating as hereinafter specified, PURCHASER shall have the right to use and occupy the aforementioned apartment.

2. PURCHASER shall have the right to occupy the apartment and PURCHASER shall pay a fee for use and occupancy of the apartment of $_____ per month starting _____ ____, 20___. It is understood that this use and occupancy fee is not rent, and that no landlord-tenant relationship has been created between the parties, and that this agreement is not governed or subject to any rent regulatory laws. If the unit fails to close within 90 days of _____ ____, 20___, the use and occupancy charge shall be increased $_____ a month unless the unit failed to solely through the fault of the Sponsor.

3. The use and occupancy fee for the month in which closing occurs shall not be adjusted for at closing. No portion of the use and occupancy fee will be applied to the purchase price of the apartment.

4. The terms of the Offering Plan and all related documents in effect as of the date hereof are incorporated in and made a part of this agreement.

5. As of the date of this Agreement, risk of loss to the apartment and its contents by fire or other hazard shall be determined pursuant to the terms of the Purchase Agreement for such apartment, as contained in the Offering Plan for the premises in effect as of the date hereof, as if PURCHASER was the owner of such apartment.

6. PURCHASER shall pay all utility costs and make any repairs to the apartment for which he would be obligated as owner. SPONSOR will not be responsible for ordinary wear and tear to the apartment during the PURCHASER'S occupancy.

7. PURCHASER may not make any alterations to the apartment without SPONSOR'S written consent.

8. This lease will terminate on the happening of the earliest of the following:

   (a) Closing

   (b) Rescission of the Purchase Agreement by PURCHASER

   (c) Default by PURCHASER

9. Upon a default by PURCHASER or Rescission of the subscription agreement by PURCHASER, which is not cured within 15 days after notice thereof, PURCHASER'S right to occupy the apartment will terminate, and PURCHASER must vacate the apartment within thirty (30) days after mailing of Notice to Vacate by the SPONSOR. Such notice must be by certified mail, return receipt requested, to the apartment. PURCHASER agrees to pay SPONSOR $500.00 per day for each day he remains in possession beyond the 30th day following mailing of the Notice to Vacate in conformity with this section. SPONSOR is hereby irrevocably authorized to deduct said per diem sum directly from any amounts being held as a security deposit hereunder, or from any sums being held in escrow pursuant to the contract of sale. Nothing contained herein shall be construed so as to limit SPONSOR's ability to have PURCHASER evicted from the premises and to pursue any other legal remedy available to SPONSOR; nor shall anything herein be construed as a waiver by the SPONSOR of his right to retain, as liquidated damages, the down payment deposited upon execution of the Purchase Agreement.

10. Any default under this agreement will be a default under the Purchase Agreement, and any default under the Purchase Agreement will be a default under this agreement. Any such default will terminate PURCHASER'S right to use and occupancy and will also terminate PURCHASER'S right to purchase the apartment and may result in loss of the down-payment.

11. This agreement may not be assigned, and may not be changed, except by signed, written instrument. This agreement is the entire agreement between the parties as regards use and occupancy of the apartment pending closing.

12. As of the date hereof PURCHASER confirms that all work required to be done in or about the subject apartment has been completed; and that in all respects PURCHASER agrees to accept the apartment in "as is" condition; subject to the "punch list", if any, attached hereto. As of the date hereof, PURCHASER waives any right whatsoever to cancel the contract, except for material change in the Offering Plan.

13. Before the Sponsor may utilize the default under the lease to declare a default under the purchase agreement, the Sponsor must either obtain an order of eviction or other judgment or order from a court or agency of competent jurisdiction against the lessee unless the lessee has vacated the Unit.

14. Building Smoking Policy: By signing this Agreement, Purchaser represents that he/she is

informed that Smoking, which includes carrying, burning, or otherwise handling or controlling any lit or smoldering product containing tobacco or cloves, including but not limited to cigarettes, cigars, pipes or electronic cigarettes, shall be permitted only inside a Unit or in an outdoor Limited Common Element that is connected to a Unit. Smoking anywhere else in the Condominium shall be prohibited, including, but not limited to, in indoor and outdoor Common Elements. Purchaser agrees that Purchaser shall not smoke, or permit smoking by any occupant, agent, tenant, invitee, guest, friend, or family member anywhere on the property except in Purchaser's Unit or in any outdoor Limited Common Element that is connected to the Unit. Purchaser is aware that Smoking in violation of this rule shall constitute a nuisance pursuant to the terms and provisions of the By-Laws and shall be subject to a fine as reasonably determined by the Condominium Board.

15. If any term of this agreement differs from the Offering Plan as accepted for filing by the Attorney General of the State of New York, the offering plan shall be controlling.

IN WITNESS WHEREOF, the parties hereunto set their hands this _____ day of _____, 20____.

PURCHASER:

SPONSOR:

BY: _____

BY: _____

PURCHASER:

BY: _____

STATE OF NEW YORK,
COUNTY OF SS:

On the ____ day of _____ in the year 20 _____ before me, the undersigned, a notary public in and for said state, personally appeared _____, personally known to me or proved to me on the basis of satisfactory evidence to be the individual(s) whose name(s) is (are) subscribed to the within instrument and acknowledged to me that he/she/they executed the same in his/her/their capacity(ies), and that by his/her/their signature(s) on the instrument, the individual(s) acted, executed the instrument.

_____
Notary Public

STATE OF NEW YORK,
COUNTY OF SS:

On the ____ day of _____ in the year 20 _____ before me, the undersigned, a notary public in and for said state, personally appeared _____, personally known to me or proved to me on the basis of satisfactory evidence to be the individual(s) whose name(s) is (are) subscribed to the within instrument and acknowledged to me that he/she/they executed the same in his/her/their capacity(ies), and that by his/her/their signature(s) on the instrument, the individual(s) acted, executed the instrument.

_____
Notary Public

STATE OF NEW YORK,
COUNTY OF SS:

On the ____ day of _____ in the year 20 _____ before me, the undersigned, a notary public in and for said state, personally appeared _____, personally known to me or proved to me on the basis of satisfactory evidence to be the individual(s) whose name(s) is (are) subscribed to the within instrument and acknowledged to me that he/she/they executed the same in his/her/their capacity(ies), and that by his/her/their signature(s) on the instrument, the individual(s) acted, executed the instrument.

_____
Notary Public

CERTIFICATIONS

CERTIFICATION BY SPONSOR AND SPONSOR'S PRINCIPALS

The Department of Law of the State of New York
28 Liberty Street, 21st Floor
New York, New York 10005

Attention: Real Estate Finance Bureau

Re: The 1296 Park Place Condominium
1296 Park Place
Brooklyn, New York
Condominium Offering Plan

Sponsor: 1296 PARK PLACE PH LLC

To whom it may concern;

We are the Sponsor and the Principals of the Sponsor of the Condominium Offering Plan for the captioned property.

We understand that we have primary responsibility for compliance with the provisions of Article 23 A of the General Business Law, the regulations promulgated by the Department of Law in Part 20 and such other laws and regulations as may be applicable.

We have read the entire Offering Plan. We have investigated the facts set forth in the Offering Plan and the underlying facts. We have exercised due diligence to form a basis for this certification. We jointly and severally certify that the Offering Plan does, and that documents submitted hereinafter by us which amend or supplement the Offering Plan will:

(i) Set forth the detailed terms of the transaction and be complete, current and accurate;

(ii) Afford potential investors, purchasers and participants an adequate basis upon which to found their judgment;

(iii) Not omit any material fact;

(iv) Not contain any untrue statement of a material fact;

(v) Not contain any fraud, deception, concealment, suppression, false pretense or fictitious or pretended purchase or sale;

(vi) Not contain any promise or representation as to the future which is beyond reasonable expectation or unwarranted by existing circumstances;

(vii) Not contain any representation or statement which is false, where we:

(a) Knew the truth;

(b) With reasonable effort could have known the truth;

(c) Made no reasonable effort to ascertain the truth; or

(d) Did not have knowledge concerning the representations or statements made.

This certification is made under penalty of perjury for the benefit of all persons to whom this offer is made. We understand that violations are subject to the civil and criminal penalties of the General Business Law and Penal Law.

SPONSOR: 1296 PARK PLACE PH LLC

By: _____
Zaur Laven

PRINCIPAL OF SPONSOR:

_____
Zaur Laven

Affirmed before me this 24 day of December, 2019

_____
Notary Public

ELCHIN LYALYABABAYEV
NOTARY PUBLIC-STATE OF NEW YORK
No. 01LY6377322
Qualified in Kings County
My Commission Expires 07-02-2022

SPONSOR: 1296 PARK PLACE PH LLC

By: _____
Reuven Rothstein

PRINCIPAL OF SPONSOR:

_____
Reuven Rothstein

Affirmed before me this 24 day of December, 2019

_____
Notary Public

ELCHIN LYALYABABAYEV
NOTARY PUBLIC-STATE OF NEW YORK
No. 01LY6377322
Qualified in Kings County
My Commission Expires 07-02-2022

RONALD B. CAGAN, P.E.
1701 ELM AVENUE
BROOKLYN, NEW YORK 11230
1516.249.3746

CERTIFICATION BY SPONSOR'S ENGINEER/ARCHITECT PURSUANT TO SECTION 20 OF THE REGULATIONS ISSUED PURSUANT TO GENERAL BUSINESS LAW, ARTICLE 23-A, AS AMENDED

12/24/2019

Department of law
Of the State of New York
28 Liberty Street, 21st floor
New York, New York 10005

Attn: Real Estate Financing Bureau
Re: 1296 Park Place
Town of Brooklyn

The sponsor of the offering plan to convert the captioned property to condominium ownership retained our firm to prepare a report describing the renovation of the property (the report). We visually inspected the existing portions of the property on 07/17/2019 and we examined the Building Plans and specifications that were prepared by the office of Ronald B. Cagan, P.E., License No: 054060 dated 11/30/2015 and approved on 10/31/16. We prepared the report dated 12/23/2019, a copy of which is intended to be incorporated into the offering plan so that prospective purchasers may rely on it.

I am a licensed engineer in the state in which the property is located. I understand that I am responsible for complying with Article 23-A of the General Business Law and the regulations promulgated by the Department of Law in Part 20 insofar as they are applicable to this report.

I have read the entire Report and investigated the facts set forth in the Report and the facts underlying it with due diligence in order to form a basis for this certification. This certification is made for the benefit of all persons to whom this offer is made. I certify that the report:

i. Sets forth in narrative form, the description and/or physical condition of the entire property as it will exist upon completion of construction, provided that the construction is in accordance with the plans and specifications I examined;
ii. In my professional opinion, affords potential investors, purchasers and participants an adequate basis upon which to found their judgement concerning the description and/or physical condition of the property as it will exist upon completion of construction, provided that construction is in accordance with the plans and specification that I examined;
iii. Does not omit any material fact;
iv. Does not contain any untrue statement of the material fact;
v. Does not contain any fraud, deception, concealment, or suppression;
vi. Does not contain any promise or representation as to the future which is beyond reasonable expectation or unwarranted by existing circumstances;
vii. Does not contain any representation or statement which is false, where I (a) Knew the truth; (b) with reasonable effort could have known the truth; (c) made no reasonable effort to ascertain the truth, or (d) did not have knowledge concerning the representations or statement made.

I further certify that we are not owned or controlled by and have no beneficial interest in the Sponsor, and that my compensation for preparing this Report is not contingent on the conversion of the property to a condominium or on the profitability or price of the offering. This statement is not intended as a guarantee or warranty of the physical condition of the property.

Ronald [illegible]

Affirmed before me this
24 day of December, 2019

Notary Public

ELCHIN LYALYABABAYEV
NOTARY PUBLIC-STATE OF NEW YORK
No. 01LY6377322
Qualified in Kings County
My Commission Expires 07-02-2022

RONALD B. CAGAN, P.E.
1701 ELM AVENUE
BROOKLYN, NEW YORK 11230
1516.249.3746

CERTIFICATION BY SPONSOR'S ENGINEER/ARCHITECT
PURSUANT TO SECTION 20 OF THE REGULATIONS
ISSUED PURSUANT TO GENERAL BUSINESS LAW,
ARTICLE 23-A, AS AMENDED

05/27/2019

Department of law
Of the State of New York
28 Liberty Street, 21st floor
New York, New York 10005

Attn: Real Estate Financing Bureau
Re: 1296 Park Place
Town of Brooklyn

The sponsor of the offering plan to convert the captioned property to condominium ownership retained our firm to prepare a report describing the renovation of the property (the report). We examined the Building Plans and specifications that were prepared by the office of Ronald B. Cagan, P.E., License No: 054060 dated 11/30/2015 and approved on 10/31/16. We prepared the report dated 05/25/2019, a copy of which is intended to be incorporated into the offering plan so that prospective purchasers may rely on it.

I am a licensed engineer in the state in which the property is located. I understand that I am responsible for complying with Article 23-A of the General Business Law and the regulations promulgated by the Department of Law in Part 20 insofar as they are applicable to this report.

I have read the entire Report and investigated the facts set forth in the Report and the facts underlying it with due diligence in order to form a basis for this certification. This certification is made for the benefit of all persons to whom this offer is made. I certify that the report:

i. Sets forth in narrative form, the description and/or physical condition of the entire property as it will exist upon completion of construction, provided that the construction is in accordance with the plans and specifications I examined;
ii. In my professional opinion, affords potential investors, purchasers and participants an adequate basis upon which to found their judgement concerning the description and/or physical condition of the property as it will exist upon completion of construction, provided that construction is in accordance with the plans and specification that I examined;
iii. Does not omit any material fact;
iv. Does not contain any untrue statement of the material fact;
v. Does not contain any fraud, deception, concealment, or suppression;
vi. Does not contain any promise or representation as to the future which is beyond reasonable expectation or unwarranted by existing circumstances;
vii. Does not contain any representation or statement which is false, where I (a) Knew the truth; (b) with reasonable effort could have known the truth; (c) made no reasonable effort to ascertain the truth, or (d) did not have knowledge concerning the representations or statement made.

I further certify that we are not owned or controlled by and have no beneficial interest in the Sponsor, and that my compensation for preparing this Report is not contingent on the conversion of the property to a condominium or on the profitability or price of the offering. This statement is not intended as a guarantee or warranty of the physical condition of the property.

STATE OF NEW YORK
RONALD B. OLGAN
054060
LICENSED PROFESSIONAL ENGINEER

Ronald B. Olgan, P.E.

Affirmed before me this
31 day of May, 2019

Notary Public

ELCHIN LYALYABABAYEV
NOTARY PUBLIC-STATE OF NEW YORK
No. 01LY6377322
Qualified in Kings County
My Commission Expires 07-02-2022